Sept. 11, 1956 J. D. KENNELLY 2,762,994

LAMP SUPPORTING ARRANGEMENT FOR ENCLOSED ROTATING SIGNAL LIGHT

Filed July 5, 1955 2 Sheets-Sheet 1

Fig. 1

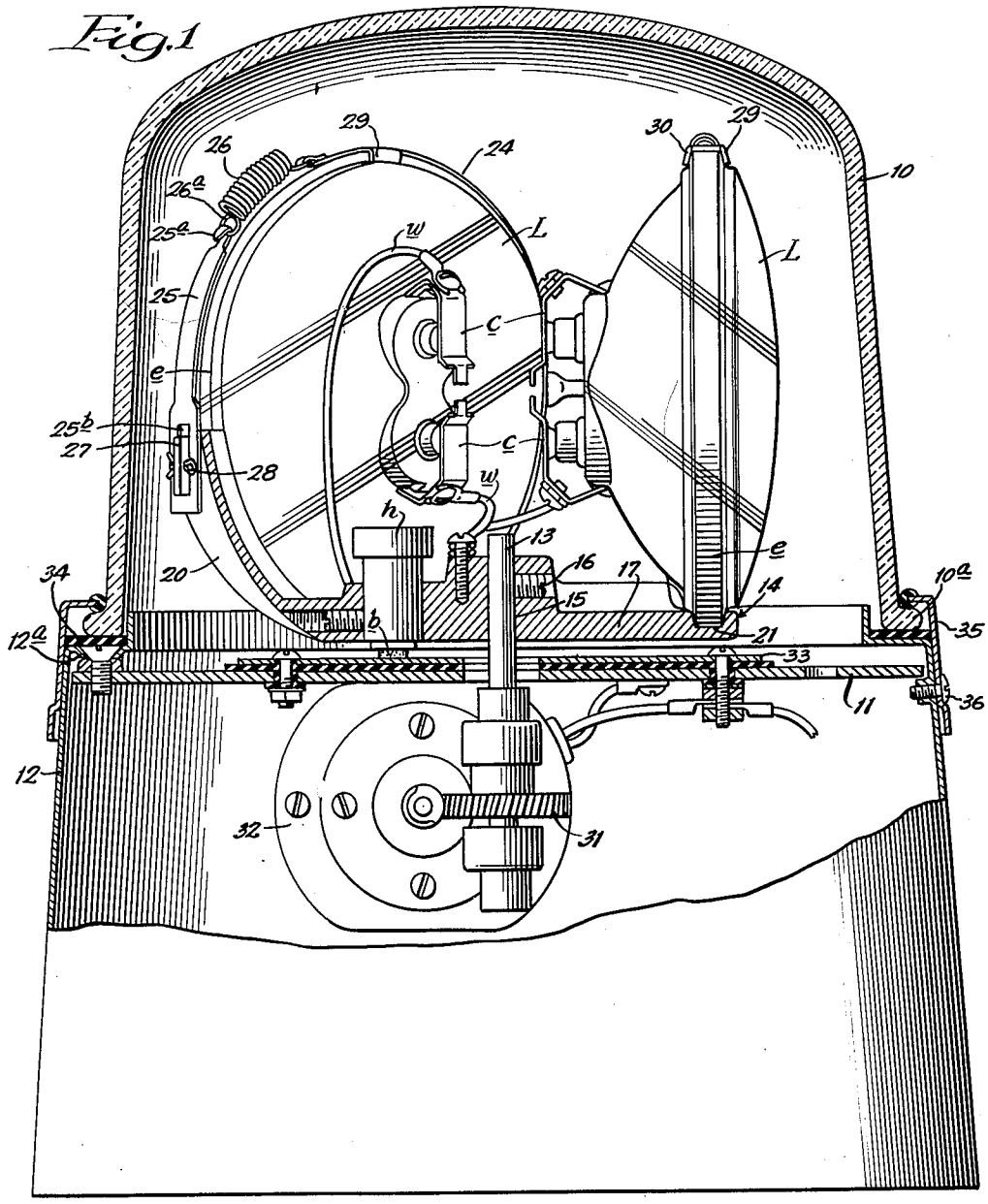

INVENTOR.
Jeremiah D. Kennelly,
BY
Dawson, Tilton & Graham,
ATTORNEYS.

Sept. 11, 1956 J. D. KENNELLY 2,762,994

LAMP SUPPORTING ARRANGEMENT FOR ENCLOSED ROTATING SIGNAL LIGHT

Filed July 5, 1955 2 Sheets-Sheet 2

Fig. 2

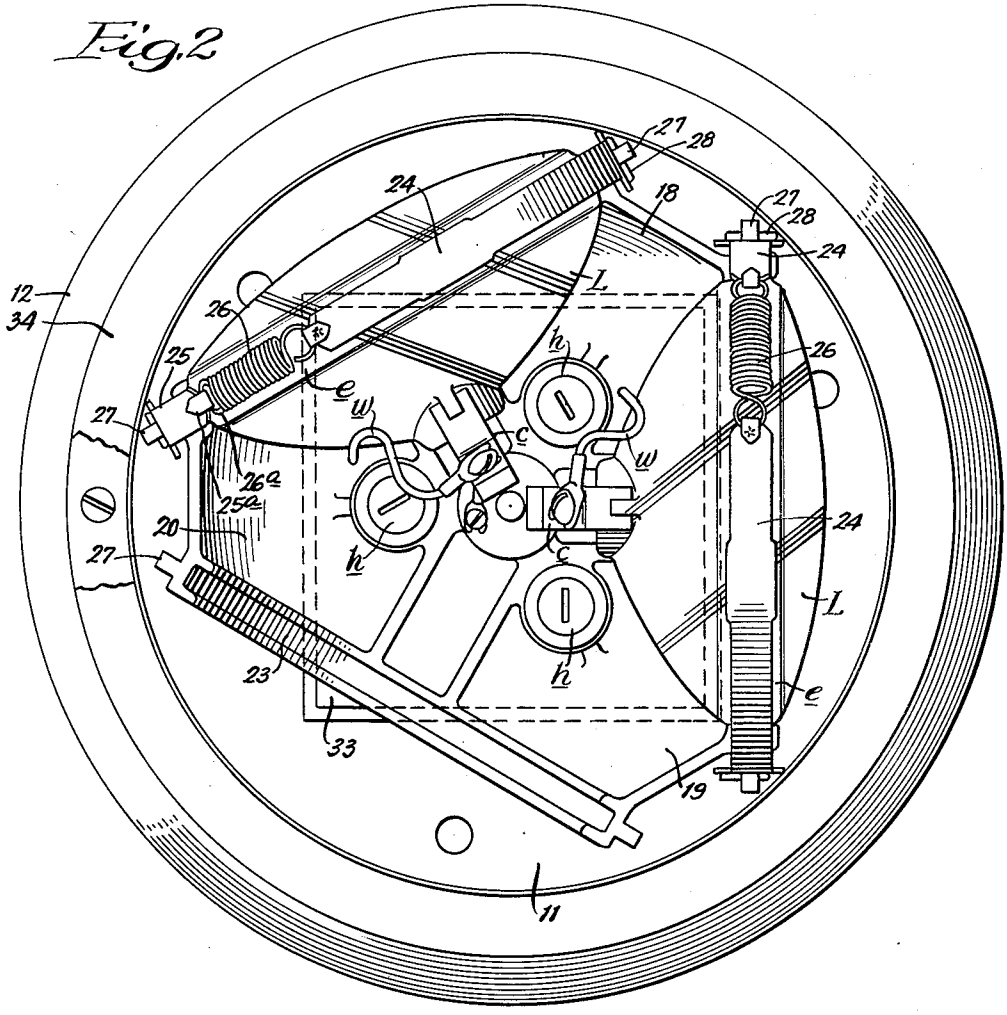

Fig. 3

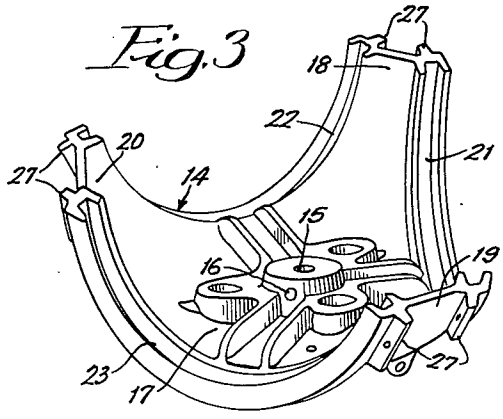

INVENTOR:
Jeremiah D. Kennelly,
BY
Dawson, Tilton & Graham,
ATTORNEYS.

United States Patent Office 2,762,994 Patented Sept. 11, 1956

2,762,994

LAMP SUPPORTING ARRANGEMENT FOR ENCLOSED ROTATING SIGNAL LIGHT

Jeremiah D. Kennelly, Oak Park, Ill., assignor to Mars Signal-Light Company, Chicago, Ill., a corporation of Illinois

Application July 5, 1955, Serial No. 519,901

5 Claims. (Cl. 340—50)

This invention relates to a signal light and more particularly to an improvement in enclosed rotating signal lights of the type illustrated in Patent No. 2,578,239, issued December 11, 1951.

One of the important advantages of enclosed rotating signal lights constructed in accordance with this invention is that the lamps or sealed beam bulbs can be readily replaced whenever this is required without the necessity of removing screw-secured clamps or other such fastening means. Still another important advantage is that three or more lamps can be mounted under a single dome of the same size as that which heretofore has been used for housing a lesser number of lamps. This permits the efficiency and effectiveness of the signal light to be markedly increased without at the same time increasing the overall size of the signal light. Further advantages which are inherent in the signal light of this invention stem from the open mounting of the bulbs, which permits the lamp terminals and wiring connections to be visually inspected without dismantling the mounting of the bulbs. It also permits the ready inspection and replacement of the electrical brushes which are normally employed for transferring current from the source of supply to the bulbs while they are being rotated.

This invention is shown in illustrative embodiment in the accompanying drawings, in which—

Fig. 1 is a side elevational view of a signal light embodying the present invention, some of the elements of the structure being shown in section for purpose of clarity; Fig. 2, a plan view of the signal light of Fig. 1 with the dome and one of the lamps removed; and Fig. 3, a perspective view of the lamp support employed in the device of Figs. 1 and 2.

Looking first at Fig. 1, there is shown a signal light having a light-transmitting dome **10** for enclosing a rotating signal light. Dome **10** can be formed of glass or plastic and is preferably transparent although it may be colored so as to appear red, green, etc. Beneath dome **10** there is provided a partition **11** which extends across the open end of dome **10**, being suspended from the inwardly extending upper end portion of base or shell **12**. A rotatably mounted shaft **13** extends through the central portion of partition **11** into the interior of dome **10**.

On the upper end of shaft **13** within dome **10**, a lamp support **14** is mounted for rotation with the shaft. Specifically, shaft **13** extends through a central opening **15** in support **14**, while support **14** is clamped to the shaft by means of set screw **16**.

Lamp support **14** has a generally flat bottom portion **17** disposed adjacent and generally parallel to partition **11**. Bottom portion **17**, as shown more clearly perhaps in Fig. 3, is integrally connected to a plurality of upwardly extending arms **18**, **19** and **20**. These arms provide therebetween a plurality of semi-circular recesses **21**, **22** and **23**. These recesses are adapted for supportingly-receiving the circumferential edges of sealed beam lamps. This is illustrated in Figs. 1 and 2, which show the lamps L in place with their circumferential edges *e* received respectively within recesses **21**, **22** and **23**. It will be apparent that these recesses are adapted for the ready insertion and removal of the lamps L.

Preferably, there is also provided expansible elastic band members connected to the upper ends of arms **18**, **19** and **20**, and arranged so that each of the bands extends in an arc above one of the recesses **21**, **22** and **23** while being otherwise adapted to releasably secure the circumferential edges *e* of the sealed beam lamps L within the recesses. More specifically, in the illustration given, there is shown band members consisting of two metal straps **24** and **25** secured together at their inner ends by a tension spring **26** while their outer ends are provided with slots like slot **25***a* so that the band ends may be received on the studs **27**, as shown more clearly in Fig. 1, and secured thereon by a pin **28**. If desired, band **24** can be provided with a pair of downwardly extending cleats **29** and **30** for holding the band in alignment with the circumferential edges *e* of the lamps L. Instead of the specific band members illustrated, any other expansible elastic band members can be used, providing the band members are adapted and arranged to perform functions equivalent to those illustrated in the drawing.

It will be noted that lamps L also provide terminal connections *c* which are electrically attached to wires *w*. The construction illustrated leaves these connections and wires open for visual inspection. Also, the brushes *b* within brush holders *h* can be readily inspected or replaced.

Some of the other parts shown in the drawing are not of particular importance for the present invention, but may be briefly referred to for sake of completeness. The shaft **13** is driven through a gear drive **31** from motor **32**, which is mounted below platform **11** within base shell **12**. On top of partition **11** there is provided an insulated contact plate **33** to which electric current is applied for transfer to the brushes *b*. Above the inwardly extending shoulder **12***a* of shell **12** is provided a washer **34** on which rest the lower edges of dome **10**. The lower edges of dome **10** are provided with an outwardly extending flange portion **10***a* which is clamped against washer **34** by clamping ring **35**, which in turn is releasably secured to shell **12** by screw means **36**.

Operation

In the operation of the signal light, it is assembled as illustrated in Figs. 1 and 2 of the drawing, there being provided three sealed beam lamps L within dome **10**, as supported by holder **14** and secured therein by the expansible elastic bands, as previously described. Whenever it is desired to remove one of the lamps L, this can be done by expanding spring **26** to release the lamp. In the illustration given, the springs **26** are provided with loops **26***a* which releasably connect to the bands **25** by the hook ends thereof **25***a*. This feature, however, is not essential for the operation of the device. It will also be noted that in the illustration given the three recesses **21**, **22** and **23** are evenly spaced around the bottom portion **17** of lamp support **14** and are oriented to hold the sealed beam lamps with their lenses facing outwardly. Also, it is preferred to form support **14** as a one-piece casting.

While in the foregoing specification this invention has been described in relation to a specific embodiment thereof, it will be apparent to those skilled in the art that the invention is susceptible to other embodiments and that many of the details described above can be varied widely without departing from the basic concept and structural ideas of the invention.

I claim:

1. In a signal light having a light-transmitting dome with a partition extending across the open end thereof

and a rotatably-mounted shaft extending through the central portion of said partition into the interior of said dome, a lamp support mounted on said shaft within said dome for rotation with said shaft, said lamp support having a bottom portion disposed adjacent and generally parallel to said partition, said bottom portion being integrally connected to a plurality of upwardly extending arms providing therebetween a plurality of semi-circular recesses for supportingly-receiving the circumferential edges of sealed beam lamps, said recesses being adapted for the ready insertion and removal of said lamps, and expansible elastic band members connected to the upper ends of said arms, each of said band members extending in an arc above one of said recesses and adapted to releasably secure the circumferential edges of said sealed beam lamps within said recesses.

2. The signal light of claim 1 in which three of said recesses are provided, being evenly spaced around said lamp support bottom portion and oriented to hold said sealed beam lamps with their lenses facing outwardly.

3. The signal light of claim 2 in which said lamp support as described in said claim 2 consists of a one-piece casting with the exception of said band members.

4. In a signal light having a transparent dome above a shell base with a platform separating the dome and shell interiors and a rotatably-mounted shaft extending upwardly from said shell interior to said dome interior

through the central portion of said platform, a lamp support mounted on the upper end of said shaft within said dome interior, said lamp support having a bottom portion disposed adjacent and generally parallel to said partition, said bottom portion being integrally connected to a plurality of upwardly extending arms providing respectively therebetween a plurality of semi-circular recesses for supportingly-receiving the circumferential edges of sealed beam lamps, said lamp support bottom portion and said lamp support arms being formed as a one-piece casting, and expansible elastic band members connected to the upper end of said arms, each of said bands extending in an arc above one of said recesses and adapted to releasably secure the circumferential edges of said sealed beam lamps within said recesses.

5. The signal light of claim 4 in which three of said arms and three of said recesses are provided, said arms and recesses being evenly spaced around said lamp support bottom portion and oriented to hold said sealed beam lamps with their lenses facing outwardly.

References Cited in the file of this patent

UNITED STATES PATENTS

2,484,345	Hinz	Oct. 11, 1949
2,644,936	Johnson	July 7, 1953