May 18, 1948. F. P. NERO 2,441,717

ROTARY CARD INDEX AND TRAYS

Filed Nov. 9, 1943 3 Sheets-Sheet 1

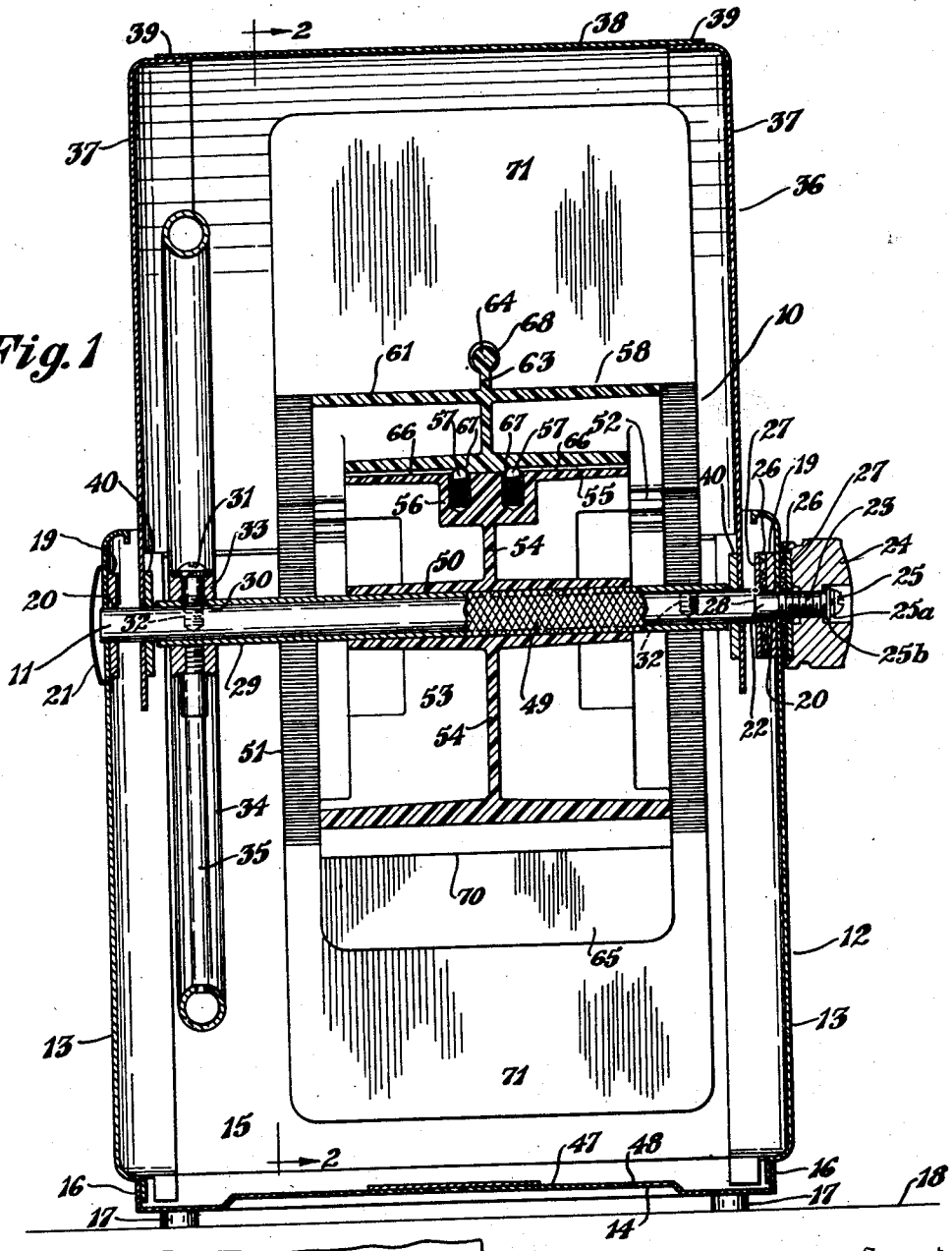

Fig. 1

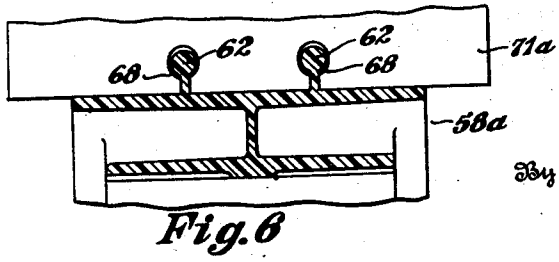

Fig. 6

Inventor

Fred P. Nero

By Frease and Bishop

Attorneys

May 18, 1948. F. P. NERO 2,441,717

ROTARY CARD INDEX AND TRAYS

Filed Nov. 9, 1943 3 Sheets-Sheet 2

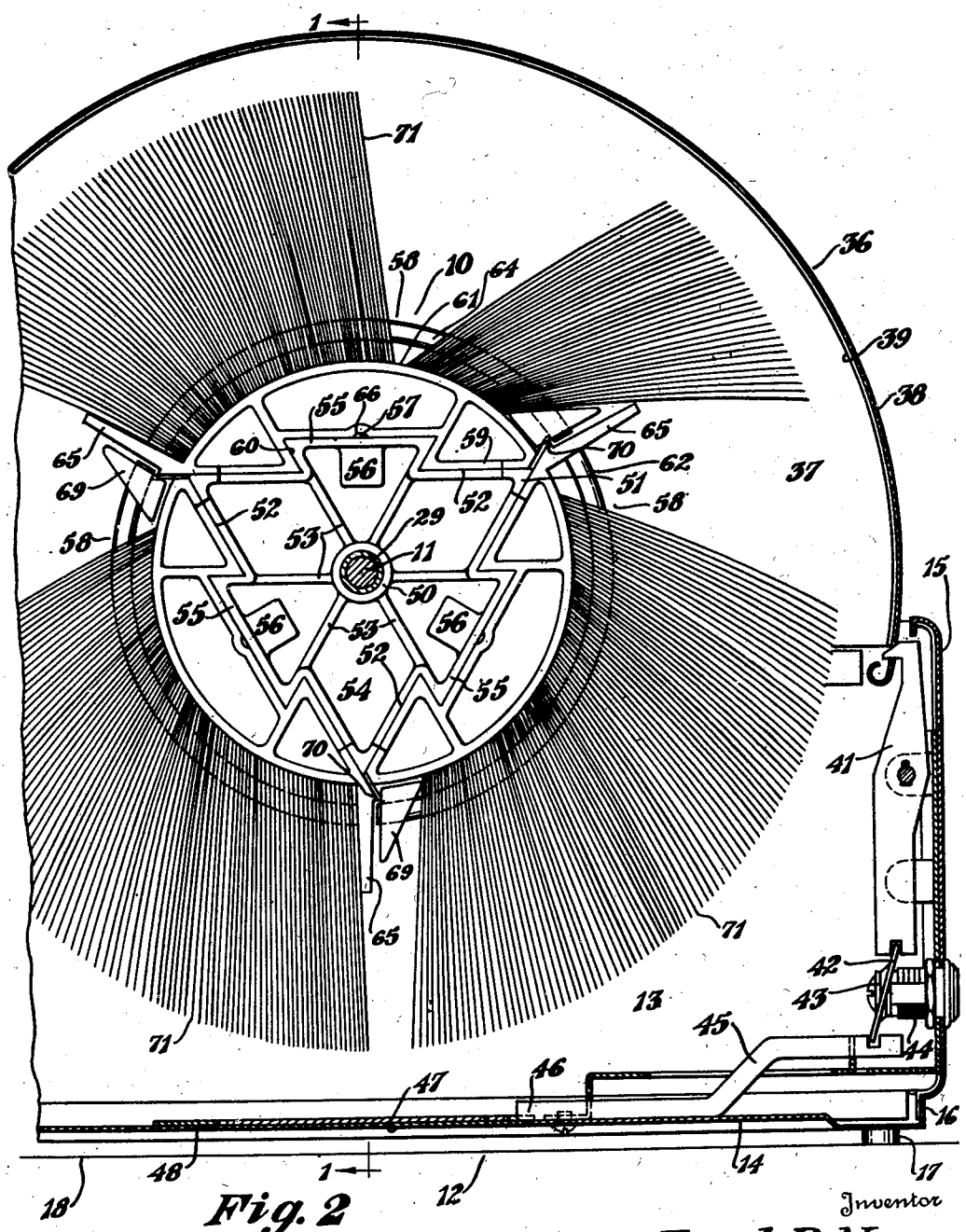

Fig. 2

Inventor

Fred P. Nero

By Frease & Bishop

Attorneys

May 18, 1948. F. P. NERO 2,441,717

ROTARY CARD INDEX AND TRAYS

Filed Nov. 9, 1943 3 Sheets-Sheet 3

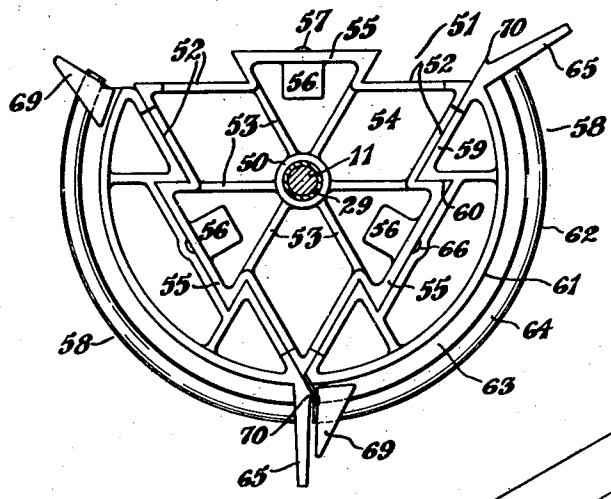

Fig. 3

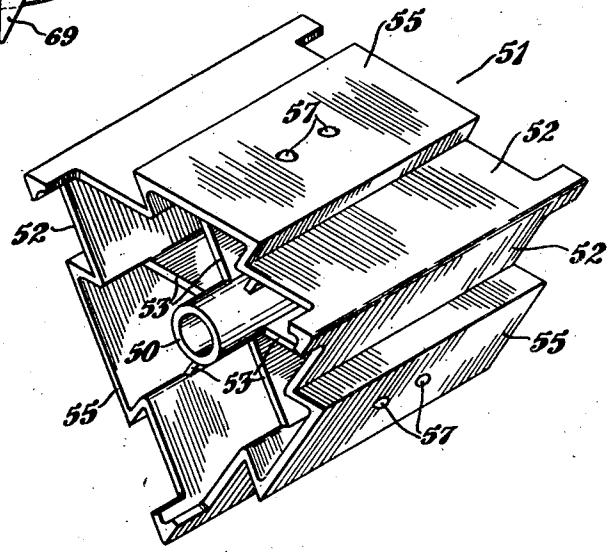

Fig. 5

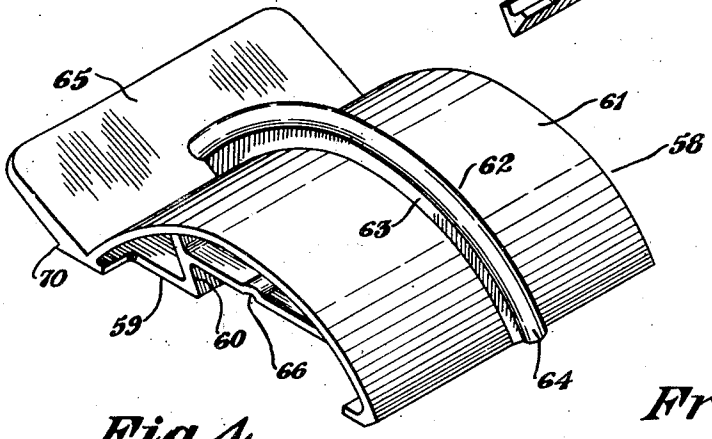

Fig. 4

Inventor

Fred P. Nero

By Frease and Bishop

Attorneys

Patented May 18, 1948 2,441,717

UNITED STATES PATENT OFFICE

2,441,717

ROTARY CARD INDEX AND TRAY

Fred P. Nero, Canton, Ohio, assignor to Diebold, Incorporated, Canton, Ohio, a corporation of Ohio

Application November 9, 1943, Serial No. 509,601

6 Claims. (Cl. 129—16)

1

The invention relates generally to card indexes wherein cards are mounted on a rail with an enlarged head by means of keyhole shaped slots in the bottom edges of the cards. The invention relates more particularly to a construction in which the rail constitutes a segment of a circle on which the cards are arranged more or less radially; the rail being formed as a part of a tray used either as a desk tray for card inspection, reference or posting, or mounted with other like trays on a wheel to form a rotary card index.

There are many prior art constructions in which are mounted on a continuous rail on the periphery of a wheel; or are mounted on a rail or the like in a drawer or tray. Also in the improved constructions of the Bruen Patents Nos. 2,168,323, 2,235,736 and 2,240,325, cards are mounted on a peripheral carrying rail composed of a plurality of arcuate segment bars detachably mounted on a wheel, which segment bars also may be detachably mounted on separate desk trays.

However, such prior devices are constructed of a large number of parts, many of which are of complicated design, and are therefore expensive to manufacture, assemble and keep in working order. Moreover, while the constructions of said Bruen patents permit end loading of the cards on the arcuate rail sections or segment bars and provide for the use of the cards, either on a wheel, or on desk trays, they require both a wheel and separate desk trays for receiving and mounting the detachable arcuate segment bars, which further increases the cost of a card index installation to be used both in wheel form and with desk trays.

Also, in prior art constructions, only a limited size of cards can be mounted alternately on a wheel or on desk trays, wtih few parts.

It is therefore a primary object of the present invention to substantially reduce the number of parts required in the construction of a rotary card index so as to have many less parts than have been required heretofore.

Furthermore, it is an object of the present invention to materially reduce the number of parts which are subjected to wear in the manipulation, operation or use of rotary indexes, and in removing cards from or placing cards on a rotary index, either individually or collectively.

Moreover, it is an object of the present invention to eliminate the use of accessory parts such as desk trays and parts thereof in connection with the use of a rotary card index system wherein the cards are used selectively on a wheel, or on a desk tray.

2

Also it is an object of the present invention to provide a rotary card index with a plurality of card mounting trays on which the cards are mounted to form a rotary card wheel, and which trays may be detached from the wheel with cards thereon and used per se as desk trays.

Likewise, it is an object of the present invention to provide a simplified one piece card mounting tray having an arcuate rail section formed integrally therewith, which tray may be used either with or without the addition of a card follower and with like trays to form a card wheel, or which tray may be used with the addition of a card follower as a desk tray.

Furthermore, it is an object of the present invention to incorporate the improvements set forth in the Miller Rotary card indexes and trays application, Serial No. 501,567, filed September 8, 1943, Patent No. 2,429,729, dated October 28, 1947, in a one piece card tray, which tray may be used either as a desk tray, or with like trays to form a wheel.

Moreover, it is an object of the present invention to provide an improved shaft mounting construction for a card wheel formed by a plurality of the improved trays, having few parts, but which nevertheless provides substantial bearings for the shaft, and provides for mounting the wheel and a pull wheel therefor with the pull wheel at either the right or the left of the card wheel.

In addition, it is an object of the present invention to provide an improved but simplified braking or tensioning device for controlling the operation of the card wheel so that the wheel may be readily moved to any desired position and held at rest at such position.

Also it is an object of the present invention to substantially reduce the weight of the moving parts of a rotary card index so as to materially reduce fatigue of the operator thereof.

Further, it is an object of the present invention to provide an improved cabinet for a rotary card index which may be opened readily to permit use of the rotary card wheel therein, or to permit removal of individual trays for use as desk trays; and which cabinet may be closed and locked to prevent unauthorized access to the cards.

Finally, it is an object of the present invention to provide an improved selective desk-rotary card index and cabinet construction having a minimum number of parts of simplified and compact

structure and ease of assembly and operation, and in consequence having a reduced cost.

These and other objects may be obtained, the stated results achieved, and the described difficulties overcome, by the devices, constructions, arrangements, combinations, sub-combinations, parts, and elements which comprise the present invention, the nature of which is set forth in the following general statement, preferred embodiments of which are set forth in the following description, and shown in the drawings and which are particularly and distinctly pointed out and set forth in the appended claims forming part thereof.

The nature of the improvements in rotary card indexes and trays of the present invention may be stated in general terms as preferably including in a card filing device, a wheel having a plurality of essentially flat faces defining a substantially polygonal contour for the wheel; a plurality of similar trays, one preferably slidably mounted on each wheel face, each tray being preferably formed in one piece with an integral projecting arcuate rail for mounting cards more or less radially of the wheel, said rail sections forming with other similar tray rail sections a substantially continuous circular rail on the wheel, and said trays being adapted for removal from the wheel to form desk card trays; means for locating the trays on the wheel; a cabinet having a rotatable cover; means for locking the cabinet with cover closed; a shaft mounted in the cabinet; said cabinet cover being rotatably mounted on said shaft; means mounting the wheel on said shaft; means mounting a pull wheel on said shaft; means for interchangeably disposing the pull wheel to the right or left of said wheel on said shaft; and braking or tensioning means associated with the shaft and cabinet for controlling the rotation of the wheel.

By way of example, preferred embodiments of the improved construction are illustrated in the acompanying drawings forming part hereof, wherein:

Figure 1 is a vertical section of the improved rotary index taken as on the line 1—1, Fig. 2;

Fig. 2 is a longitudinal section taken as on the line 2—2, Fig. 1, of the improved rotary index;

Fig. 3 is a view similar to a portion of Fig. 2, illustrating the substantially polygonal wheel with one tray removed therefrom and omitting the cards and cabinet parts;

Fig. 4 is a perspective view of a tray removed from the parts shown in Fig. 3, for use as a desk tray;

Fig. 5 is a perspective view of the substantially polygonal wheel member, illustrated in Figs. 1, 2 and 3; and

Fig. 6 is a view similar to a portion of Fig. 1, illustrating a modified form of tray having two carrying rails.

Similar numerals refer to similar parts throughout the drawings.

Referring particularly to Figs. 1 and 2, the improved rotary index wheel construction is indicated generally at 10, mounted on a shaft 11 carried by the cabinet indicated generally at 12.

The cabinet 12 preferably includes side plates 13, a bottom plate 14 and end plates 15 secured together preferably by spot welding as at overlapped joints 16. The cabinet may be provided with feet 17 for resting upon a floor or table top or other surface indicated generally at 18. Heavy washer-like members 19 are spot welded to the cabinet walls 13; and the apertures 20 thereof, which are aligned with similar apertures in the walls 13, form simple but compact and sturdy bearings journalling the ends of the shaft 11. One projecting end of the shaft 11 is preferably covered by a dust cover 21 secured to the side wall 13 by any suitable means, as shown at the left side of Fig. 1.

The opposite end of shaft 11 is preferably provided with a reduced shank 22 threaded at its outer end 23. A tensioning knob 24 is threaded onto shaft threaded portion 23 and held against removal by screw 25, lock washer 25a and washer 25b. A preferably leather washer 26 is located inside of right bearing washer 19, and another similar leather washer 26 is located outside of right cabinet wall 13. Metallic washers 27 are keyed to shank 22, one between outer leather washer 26 and knob 24 and one between inner leather washer 26 and shoulder 28 of shank 22. With this construction, a turning of knob 24 onto threaded portion 23 of shaft 11, compresses leather washers 26 between washers 27 and side wall and bearing 13—19 to provide the desired amount of friction for holding the shaft in any desired position, thus controlling rotation of the shaft; and a turning of knob 24 in the other direction permits shaft 11 to be freely rotated.

A sleeve shaft 29 is telescoped over shaft 11 and is provided near one end with an aperture 30 through which screw 31 may be passed for selectively threading into one or the other of threaded holes 32 formed in shaft 11 near each end thereof, to lock sleeve shaft 29 on shaft 11. Screw 31 also passes through hub 33 of the pull wheel formed by pull ring 34 and spokes 35. With this construction, sleeve shaft 29 may be turned end for end in assembling, so as to locate the pull ring 34 at either the right or the left of rotary index wheel 10.

The cabinet 12 is provided with a semi-circular cover 36 formed by side plates 37 and arcuate top plate 38, preferably assembled as by spot welding along overlapped portions 39. The side plates 37 of cover 36 are also provided with washer-like members 40 spot welded to side plates 37 and forming bearings for the cover 36 on shaft 11. The ends of sleeve shaft 29 serve to locate the position of the cover 36 relative to the shaft 11 and cabinet 12.

The cover is shown in closed position in Fig. 2, in which position it may be locked by pivoted latch member 41 operated by a cam member 42 secured at 43 to the inner end of a key lock assembly generally indicated at 44 of usual and well known type. A sliding lock bar 45 may also be simultaneously operated by cam 42 to lock or unlock, at its inner end 46, a cover plate 47 for a central opening 48 in the bottom wall of cabinet 12. The central opening 48 is provided for gaining access to the interior of the cabinet 12 when the rotary index is full of cards, for retrieving a card or the like which may have dropped to the bottom of the cabinet.

The outer surface of sleeve shaft 29 is preferably knurled or otherwise roughened as indicated as 49, and the hub 50 of plastic wheel member generally indicated at 51, is pressed over tubular shaft 29 and held in position thereon by the outer roughened surface 49 thereof. Wheel member 51 is best illustrated in Fig. 5 and is preferably formed of molded thermoplastic material with a plurality of essentially flat faces 52, which define a substantially polygonal contour for the wheel. The wheel member 51 may have the desired number of integral spoke

portions 53 and web portions 54 for joining the essentially flat faces 52 to the hub 50 thereof. A dovetail rib 55 is provided projecting outwardly from each flat face 52, and in an enlargement 56 under each dovetail rib 55 preferably two spring pressed balls 57 are provided.

The improved tray generally indicated at 58 and best shown in Figs. 2, 3 and 4 is also formed in one piece from molded thermoplastic material and has a flat base or bottom 59, a dovetail groove 60, an arcuate card floor 61, an arcuate rail 62 having a web 63 and head 64 and a support 65 at one end thereof. One tray 58 may be mounted on each flat face 52 of the wheel member 51 by telescoping dovetail groove 60 over dovetail rib 55. The spring pressed balls 57 engage in grooves 66 and against the ends 67 (Fig. 1) thereof to centrally locate each tray 58 on each wheel face 52.

The wheel member 51 of generally polygonal contour has been shown as having three flat faces 52, and therefore holds three card trays 58. It is to be understood, however, that the polygonal shaped wheel 51 may have more than three flat faces, such as four or five or six or more faces to receive and mount a corresponding number of trays.

When the trays 58 are mounted on the wheel 51, as best shown in Fig. 2, a substantially continuous circular rail 62 is formed around the wheel which may carry a full complement of cards 71 substantially as shown in Fig. 2. The cards 71 are each provided with a keyhole slot 68, which engages over rail head 64 to secure each card to the tray. Thus the cards 71 are retained by rail 62 which acts as a retaining member for mounting the cards on mounting surface 61 of each tray; and the integrally molded card mounting surface and retaining member is mounted on holding or retaining means on wheel member 51.

A follower 69, also provided with a keyhole slot, may if desired be provided for each tray 58, although a follower is unnecessary when the device is operated as a rotary index. Thus, the projection 70 on the outside of support wall 65, projects beyond the end of the rail head 64 of the rail of the adjacent tray so as to prevent cards from slipping off the end of the rail on which the cards are mounted.

The rotary index illustrated, may be rotated to any position for reference or access to any card with all the cards mounted in wheel form as illustrated in Fig. 2. At other times during use of the device, it may be desired to refer to or post on a great many of the cards in a single group; and for such use it is much more convenient to have the cards available for use on a desk. In such event, all that is necessary for the operator to do is to slide the particular tray 58, having the desired group of cards carried thereon, sidewise from the wheel member 51 and place the tray on a desk, the flat bottom surface 59 of the tray 58 serving as a suitable base for the tray when used as a desk tray.

Thus, it is unnecessary to operate any latches or to transfer any carrying rails from the wheel to a separate desk tray for selective use of the device in wheel form, or with desk trays. In using a tray 58 as a desk tray, it may be desirable to place a follower 69 on the open end of rail 62 when the tray 58 is removed from the wheel member 51, if a follower 69 is not on the tray before removal from the wheel member 51.

It is unnecessary to describe further the general operation and use of a rotary index because the operation and use of the same is well known in the art. It is apparent, however, from the foregoing detailed description, that the improved construction permits end loading of the cards on the arcuate rails 64; provides for the use of the cards, either on the wheel or on a desk; and uses the same tray as a desk tray (Fig. 4) that is used for mounting the cards on the wheel (Fig. 2).

The wheel of the rotary index shown in Figs. 1 and 2 is formed essentially of four parts, namely, three similar trays 58 and wheel member 51. The simple spring pressed balls or friction catches 57 are of course mounted in each wheel part 51, and three similar followers 69 may be used, one with each tray. Thus, the number of parts for the construction of the improved rotary index is substantially reduced as compared with prior art devices and of the four parts there are only two parts of different design, and the design thereof is very simple. Moreover, the requirement of additional or accessory parts or trays for alternate wheel or desk use is eliminated.

As indicated above, I prefer to form the trays 58 and wheel member 51 of a moldable thermoplastic material which is advantageous for a number of reasons. First, such material is light in weight and therefore reduces fatigue of the operator in using the device. Second, the trays 58 and wheel member 51 may be readily manufactured each, in one piece, from such material. Third, the wear on the keyhole slots in the cards because of continual sliding movement of the cards on the rails is materially reduced if the wheels are formed of thermoplastic materials so as to obtain the advantages set forth in the Miller application, Serial No. 501,567, Patent No. 2,429,729, referred to above.

Likewise, the construction of the cabinet and wheel shaft mounting therein is very simplified; the parts thereof being few in number and of very simple design. Thus, all of the cabinet parts may be formed of simple sheet metal stampings, readily spot welded together. The shaft and cabinet hood bearings are of simple but sturdy design. The braking or tensioning means and assembly for controlling rotation of the shaft also has a very simple construction, easy to operate and effective in use.

A difficulty has been experienced in the use of prior rotary indexes on which cards are mounted on a rail by keyhole slots. This difficulty is the limitation as to the size of card which may be carried on a single rail because the weight of a card over a certain size has a tendency during use to pull the card off the rail, when the card is at the bottom side of the wheel. This difficulty may be entirely overcome in an index adapted for selective wheel or desk use by the present improved construction as shown in the modified form of tray illustrated in Fig. 6 wherein the tray 58*a* is provided with two rails 62 which engage a similar number of keyhole slots 68 in each card 71*a*. Thus, the cards 71*a* may be larger in either width or height or both than the maximum sized card 71 that may be satisfactorily carried by a single rail, as illustrated in Fig. 1.

Accordingly, the present invention provides an improved selective desk-rotary card index and cabinet construction which is much cheaper to manufacture than prior rotary card indexes; which eliminates many of the parts heretofore required in the construction of rotary indexes;

which is compact and easily assembled and operated; which does not require extra trays for selective wheel or desk use; which is very quiet, light and non-fatiguing in operation; which substantially reduces wear on the cards mounted on the index; and which will hold and retain larger cards than has been possible heretofore.

The embodiments of the present improvements illustrated and described herein are by way of example and the scope of the present invention is not limited to the exact details of construction of the various parts. When the term "polygonal shape" is used herein with reference to the wheel member, that term is used in a broad or general sense, as indicating a wheel member having a plurality of flat faces upon which the flat bottom walls of card mounting trays may be secured, even though a dovetail rib projects from the flat wheel face.

Having now described the features of the invention, the construction, operation and use of preferred embodiments thereof, and the advantageous, new and useful results attained by the improved construction; the new and useful devices, constructions, arrangements, combinations, sub-combinations, parts and elements, and reasonable mechanical equivalents thereof obvious to those skilled in the art, are set forth in the appended claims.

I claim:

1. In rotary card index construction, a wheel member, means rotatably mounting the wheel member, a plurality of card tray members; each tray member being formed integrally with a base, a curved card mounting surface and curved card retaining means; and dovetail means interengaging between the members extending transversely of the wheel member mounting the tray members on the wheel member.

2. In rotary card index construction, a polygonal wheel, a plurality of card trays, each tray being formed integrally with a flat base, an arcuate card mounting surface and arcuate card retaining rail means; and means including a dovetail groove on each tray base and ribs on the wheel detachably mounting the tray bases on the polygonal wheel whereby cards carried by said trays may be referred to in said trays selectively on said wheel or on a desk.

3. In rotary card index construction, a wheel and means rotatably mounting the wheel; the wheel comprising a member having a plurality of flat surfaces defining a generally polygonal periphery; a plurality of similar card trays removably mounted one on each flat surface of the wheel, each tray being formed integrally with a flat bottom, a curved card mounting surface, and curved card retaining means projecting from and extending longitudinally of said curved surface; and interengaging means on each tray and each flat wheel surface slidably mounting each tray on its flat wheel surface for removal from the wheel transversely of the tray and wheel.

4. In rotary card index construction, a wheel member, means rotatably mounting the wheel member, a plurality of card trays; each tray being formed integrally with a flat base, a curved top, and curved card retaining means projecting from and extending longitudinally of the top; and interengaging means on each flat tray base and on the periphery of the wheel member mounting the trays on the periphery of the wheel member for slidable removal from the wheel member transversely thereof.

5. In rotary card index construction, a wheel member, means rotatably mounting the wheel member, a plurality of similar trays; each tray being formed integrally with a base, an arcuate card mounting surface and arcuate card retaining rail means; and integral means on each tray base interengageable with integral means on the wheel member mounting the trays on the wheel member for slidable removal transversely of the wheel member; whereby the trays when mounted on the wheel member form substantially continuous circular rail means on the periphery of the wheel member adapted to receive a multiplicity of cards arranged more or less radially of the wheel and having slots for mounting the cards on the rail means, and whereby any tray with cards carried thereby may be removed to a desk from the wheel member.

6. In rotary card index construction, a wheel member, means rotatably mounting the wheel member, a plurality of card trays; each tray being formed integrally with a base, a curved card mounting surface, and curved card retaining means projecting from said card mounting surface; and means extending transversely of each tray base slidably engageable with means extending transversely of the wheel member mounting the trays on the periphery of the wheel for slidable removal transversely thereof; whereby when the trays are mounted on the wheel the card retaining means extend circumferentially of the wheel.

FRED P. NERO.

REFERENCES CITED

The following references are of record in the file of this patent:

UNITED STATES PATENTS

Number	Name	Date
1,871,840	Cobb	Aug. 16, 1932
1,976,249	Stafford	Oct. 9, 1934
2,046,655	Scholfield	July 7, 1936
2,168,323	Bruen	Aug. 8, 1939
2,205,932	Scholfield	June 25, 1940
2,235,736	Bruen	Mar. 18, 1941
2,240,325	Bruen	Apr. 29, 1941

FOREIGN PATENTS

Number	Country	Date
374,994	Italy	1939
433,175	Great Britain	1935