July 16, 1929. P. JÁUREGUI 1,721,221

SURGICAL ARM CHAIR

Filed Feb. 8, 1927 3 Sheets-Sheet 1

Fig. 1

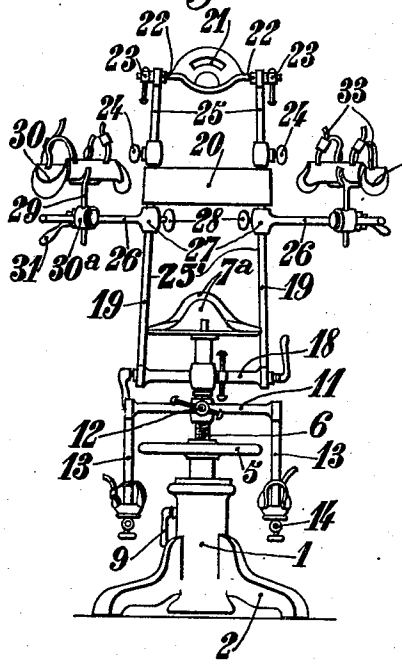

Fig. 2

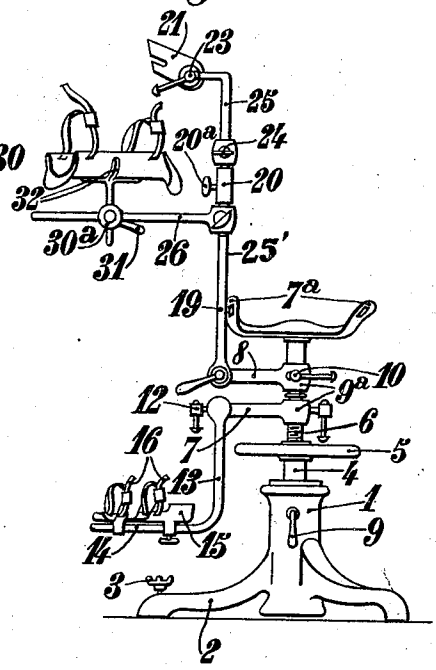

Fig. 3

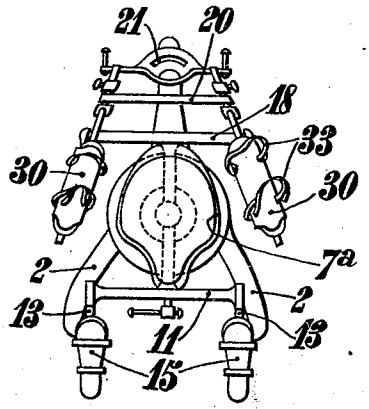

P. Jauregui
INVENTOR

By: Marks & Clerk
Attys.

July 16, 1929. P. JÁUREGUI 1,721,221

SURGICAL ARM CHAIR

Filed Feb. 8, 1927 3 Sheets-Sheet 2

Fig. 4

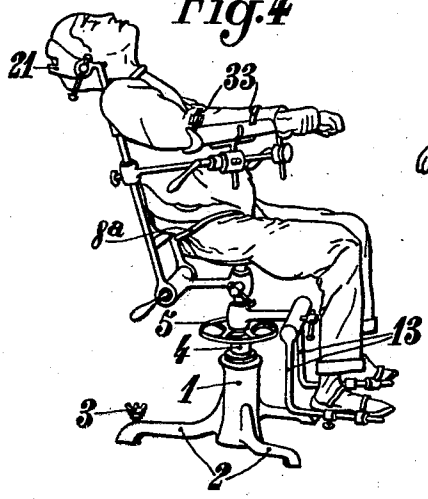

Fig. 5

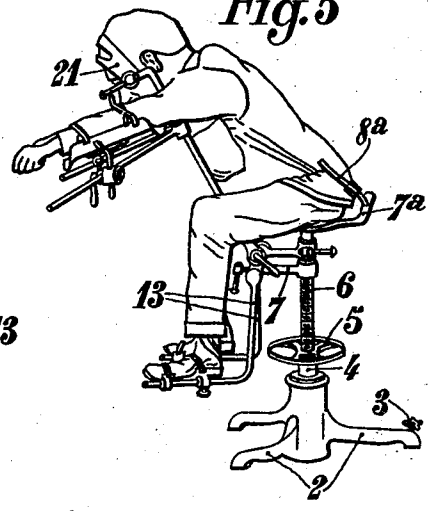

Fig. 6

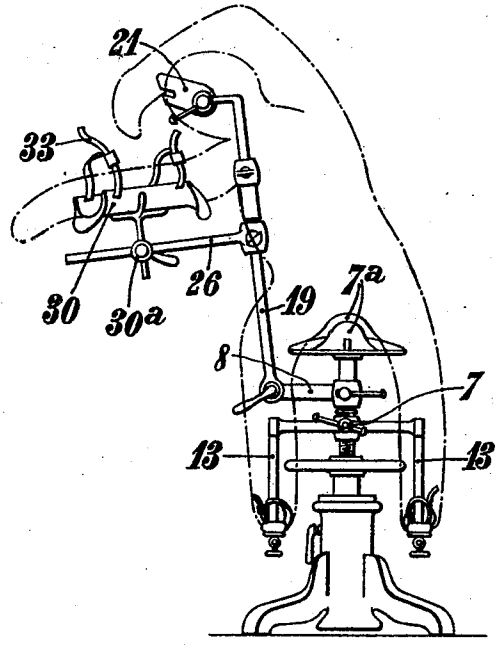

P. Jauregui
INVENTOR

By: Marks & Clark
Attys.

July 16, 1929. P. JAUREGUI 1,721,221

SURGICAL ARM CHAIR

Filed Feb. 8, 1927 3 Sheets-Sheet 3

Fig. 7

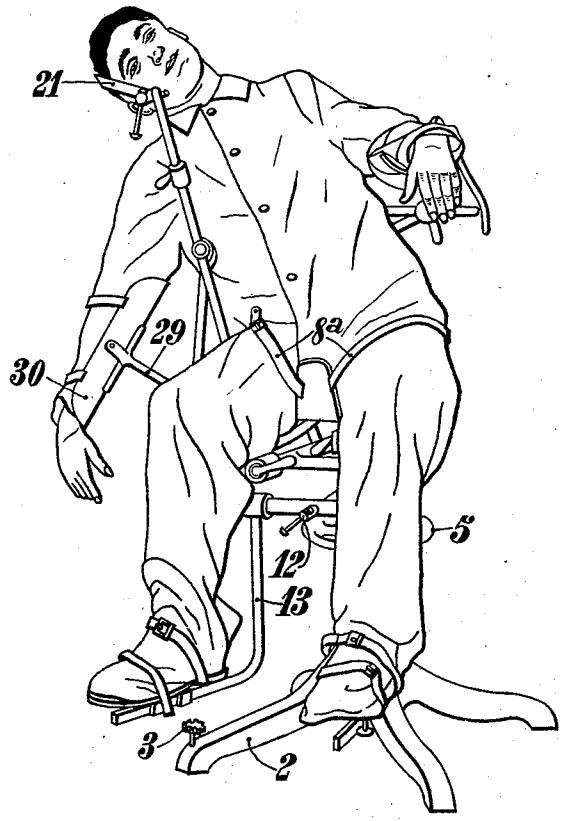

P. Jauregui INVENTOR

By: Marks & Clark Attys

Patented July 16, 1929. 1,721,221

UNITED STATES PATENT OFFICE.

PEDRO JÁUREGUI, OF PARIS, FRANCE.

SURGICAL ARM CHAIR.

Application filed February 8, 1927, Serial No. 166,750, and in Argentina April 14, 1926.

The present invention relates to a surgical arm-chair adapted to facilitate operations to the head, upper limbs and thorax and, for that purpose, capable of holding the patient in any of the positions most favourable for this kind of operations.

To that effect, the invention is characterized by the combination, with an axial rod carrying a seat and the height of which is adjustable relatively to a pedestal, of radial arms capable both of pivoting about the said axial rod, of moving along the latter and to lock in the chosen position, one of these radial arms carrying foot-rests which can be orientated about an arc, preferably horizontal, and the other, connected rods orientable about an axis, preferably horizontal, and serving as slides for arm-rests orientable in any direction, and serving also as supports for a back and a head-rest adjustable in position.

The accompanying drawing illustrates, by way of example only, a form of construction of a surgical arm-chair or vertical surgical table such as above outlined.

Fig. 1 is a front view of the arm-chair.

Figs. 2 and 3 are respectively the corresponding side view and plan view of Fig. 1.

Fig. 4 shows the arm-chair in position of use for an operation on the head, forehead, face, or upper limbs.

Fig. 5 shows the arm-chair with a patient in position for an operation on the lateral and back regions of the head, the nape of the neck or the dorsal region of the thorax, this position being known as "jockey position".

Fig. 6 shows the arm-chair in position for an operation on the lateral region of the thorax.

Fig. 7 is a perspective view, showing the arm-chair in position for an operation on the lateral region of the face.

The arm-chair comprises a supporting pedestal, preferably of cast-iron, of the type generally employed in dentist arm-chairs, consisting of a central part 1 and feet 2 resting on the ground. One of said feet 2 at least is provided with a screw 3 the point of which is adapted to slightly enter into the floor of the operating room for ensuring the adherence of the arm-chair thereto.

In an axial bore of the central part 1 is fitted a hollow rod 4 provided with an operating hand-wheel 5 and immobilized in the axial direction in any suitable manner. Into said rod 4 is screwed a screw-threaded rod 6 which carries at its upper part a seat, preferably metallic, having substantially the shape of a saddle, provided with lugs 7^a for receiving straps 8^a serving to immobilize the patient by holding him by the thighs or the hips. By manipulating the handwheel 5, the height of the seat above the ground can be adjusted at will and the seat can be locked in the chosen position by means of a lock-screw, the handle 9 of which is accessible on the side face of the central part 1.

On the rod 6 are mounted two radial arms 7 and 8 which fit thereon by means of an internally screw-threaded eye 9^a in which is mounted a screw 10 provided with an operating lever to permit locking of the arms 7 and 8 in a predetermined angular position and at a predetermined level.

The lower arm 7 carries, at its free end, a tubular cross member 11 also provided with a locking screw 12 and in which fits a horizontal cross member the ends of which carry two arms 13 of square sections. The lower part of each arm 13 carries a slide 14 for shoes 15 made of pressed sheet-iron for instance, in which fit the feet of the patient. Said shoes 15 are provided with straps 16 of any suitable form which serve to secure the feet of the patient. Said shoes are preferably made in two parts capable of sliding relatively to each other, so as to adapt themselves to the length of the feet of the patient. The arms 13 is adapted to be orientated about the theoretical axis of the cross-member 11 and locked in the desired angular position by means of lock screw 12.

The upper arm 8 is provided, at its free end with a cross member 18 at the ends of which are pivoted two uprights 19 preferably connected together by a cross member 20 (Fig. 1) and joined together at their upper extremities by a head rest 21 journalled at 22, so that it can be orientated at will and locked in the position chosen by lock screws 23 or other equivalent means provided for that purpose. Preferably, the uprights are tubular and in two parts 25 and 25′ telescopically mounted with locking screws 24, to allow adjusting the height of the head-rest 21 relative to the seat.

The parts 25′ of the uprights 19 serve as supports for radial arms 26 passing through sockets 27 of parts 19. Said sockets are provided with locking screws 28 which permit adjusting of their height along the upright and their angular orientation thereabout.

The arms 26 serve as supports for rods 29

of channel members 30 forming arm-rests. The connection between the arms 26 and the rods 29 is preferably effected through the medium of a double joint 30^a, of well known construction, which permit the rod 29 to pivot about and slide along the longitudinal axis thereof; and rod 29 and joint 30^a, to pivot and slide relatively to the arms 26. A locking screw 31 permits locking of the joint 30 and the rod 29 in the respective positions chosen.

The arm-rests 30 are, for instance, made of pressed sheet-iron, and secured to the rod 29 provided with lugs 32 at its upper part. The arm-rests 30 are preferably internally lined with a quilted packing of any suitable nature and arrangement; and are provided with straps 33 permitting to immobilize the fore-arms of the patient.

The arms 26 are normally arranged on the uprights 19, above the cross-member 20 which forms the back, but since cross member 20 is simply traversed at its ends by the upper uprights 25 and provided with locking screws 20^a, it may be removed so as to permit of mounting the arms 26 on the rods 25, if necessary, for causing the patient to occupy a predetermined position.

The arm-chair just described is susceptible to modification. The cross-member 18 might, for instance, be jointed along the theoretical axis thereof. This would give to the arms 19 a greater freedom and would allow them to occupy any position in space. The same arrangement might be applied for fitting the supports 13 on the arm 7. The lower branch 14 might even be pivoted, for instance by means of a ball and socket joint, on the upper branch 13 of the supports of the foot-rests, so as to give to these supports any desired position.

Fig. 4 shows the arm-chair in position for operating on the forehead and face, on the throat on the front part of the thorax or on the upper limbs of a patient. A simple inspection of Fig. 4 will reveal the relative positions adopted for the various elements of the arm-chair for placing the patient in the most favourable position.

Fig. 5 shows the arm-chair used for holding a patient who is to be operated upon on the back part of the head, nape of the neck, or the rear region of the thorax and in particular the spine. This is the position known as the "jockey position".

In Fig. 6, the arms 7 and 8 are arranged in two planes at right angles and the patient lays one side of his head on the head-rest, one of his arms being held in the channel-member 30, whilst the other arm is retained, in the position shown, by straps which can be easily attached to one of the uprights 25. This arrangement can be adapted for an operation on the lateral region of the thorax.

Fig. 7 shows the arm-chair used for an operation on the lateral face of the head. The arm rests 30 are placed in the positions shown, and the patient lays the side of his head, which is not to be operated, on the head-rest 21.

The advantages of the surgical arm-chair or vertical surgical table which has just been described, result from the fact, sanctioned by experience, that the most favourable position for operating on a patient on the head, the thorax or the upper limbs, is preferably a seated position with proper inclination. The arm-chair can be caused to turn about a vertical axis by loosening the screw 9, thus allowing to place the patient in a position best suited for the lighting conditions.

The arm-chair forming the subject-matter of the invention such as described in its essential arrangements, can be constructed in various ways. Preferably, it is constituted of steel tubes, externally nickel-plated, with the pedestal made of cast-iron.

While I have disclosed what I deem to be the preferably form of my device I do not wish to be limited thereto as there might be various changes made in the details of construction and the arrangement of parts without departing from the spirit of the invention comprehended within the scope of the appended claims.

What I claim as my invention and desire to secure by Letters Patent is:—

1. In a surgical chair of the type described, an adjustable central supporting rod, a seat on said rod, a pair of adjustable arms carried by said rod, a cross arm carried by one of said arms, a pair of upwardly extending rods carried by said cross arm, an adjustable head rest interconnecting the extremities of said upwardly extending rods, an adjustable arm on each of said upwardly extending rods, an adjustable arm rest on each of said last mentioned rods, a cross-arm carried by the other of said first mentioned arms, a pair of downwardly extending rods on said last mentioned cross arm and an adjustable foot rest carried by each of said last mentioned arms.

2. In a surgical chair of the type described, an adjustable central supporting rod, a seat on said rod, a pair of adjustable arms carried by said rod, a cross arm carried by one of said arms, a pair of upwardly extending rods carried by said cross arm, an adjustable head rest interconnecting the extremities of said upwardly extending rods, an adjustable arm on each of said upwardly extending rods, an adjustable arm rest on each of said last mentioned rods, a cross arm carried by the other of said first mentioned arms, a pair of downwardly extending rods on said last mentioned cross arm, an adjustable foot rest carried by each of said last mentioned arms, and strap receiving means formed in said foot rests, said arm rests and said seat.

3. In a surgical chair of the type described,

an adjustable central supporting rod, a seat on said rod, a pair of adjustable arms carried by said rod, a cross arm carried by one of said arms, a pair of upwardly extending telescoping rods carried by said cross arm, an adjustable head rest interconnecting the extremities of said upwardly extending rods, an adjustable arm on each of said upwardly extending rods, an adjustable arm rest on each of said last mentioned rods, a cross arm carried by the other of said first mentioned arms, a pair of downwardly extending rods on said last mentioned cross arm and an adjustable foot rest carried by each of said last mentioned arms.

4. In a surgical chair of the type described, an adjustable central supporting rod, a seat on said rod, a pair of adjustable arms carried by said rod, a cross arm carried by one of said arms, a pair of upwardly extending rods carried by said cross arm, an adjustable head rest interconnecting the extremities of said upwardly extending rods, an adjustable arm on each of said upwardly extending rods, an adjustable arm rest on each of said last mentioned rods, a cross arm carried by the other of said first mentioned arms, a pair of downwardly extending rods on said last mentioned cross arm, an adjustable foot rest carried by each of said last mentioned arms, and detachable means for bracing said upwardly extending rods.

5. In a surgical chair of the type described, an adjustable central supporting rod, a seat on said rod, a pair of adjustable arms carried by said rod, a cross arm carried by one of said arms, a pair of upwardly extending rods carried by said cross arm, an adjustable head rest interconnecting the extremities of said upwardly extending rods, an adjustable arm on each of said upwardly extending rods, an adjustable channel-shaped arm rest on each of said last mentioned rods, a cross arm carried by the other of said first mentioned arms, a pair of downwardly extending rods on said last mentioned cross arm and an adjustable foot rest carried by each of said last mentioned arms.

6. In a surgical chair of the type described, an adjustable central supporting rod, a seat on said rod, a pair of adjustable arms carried by said rod, a cross arm carried by one of said arms, a pair of upwardly extending rods carried by said cross arm, an adjustable head rest interconnecting the extremities of said upwardly extending rods, an adjustable arm on each of said upwardly extending rods, an adjustable arm rest on each of said last mentioned rods, a cross arm carried by the other of said first mentioned arms, a pair of downwardly extending rods on said last mentioned cross arms, an adjustable foot rest carried by each of said last mentioned arms, a pedestal for central supporting rod and a thumb screw, carried by said pedestal adapted to engage a hole in the floor.

In testimony whereof I have signed my name to this specification.

PEDRO JÁUREGUI.