Feb. 4, 1964 J. S. CASE 3,120,376

BOARD FENCE INCLUDING METHOD OF SECURING BOARD MEMBERS TO LINE AND/OR CORNER POST

Filed June 5, 1961

FIG. 1.

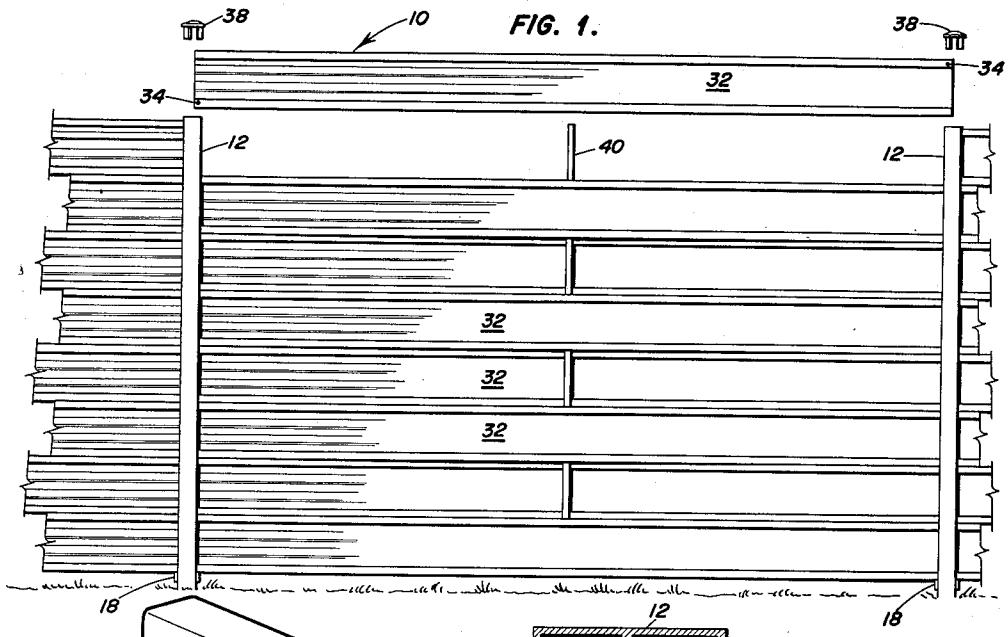

FIG. 2.

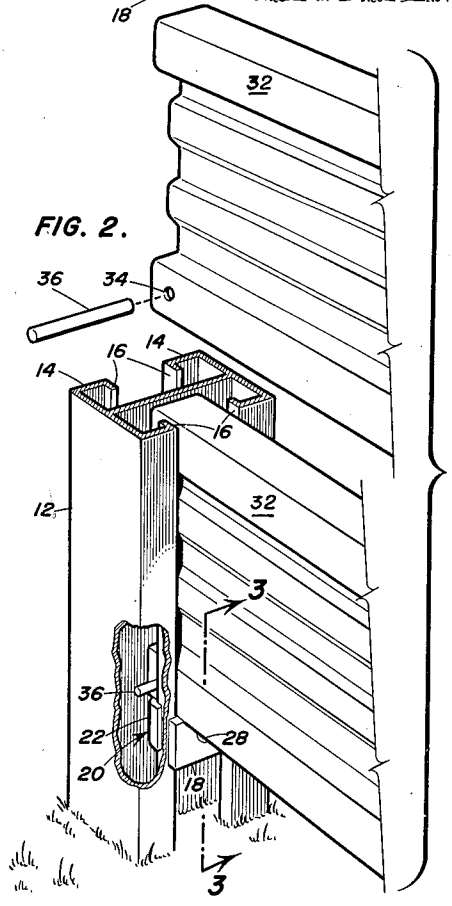

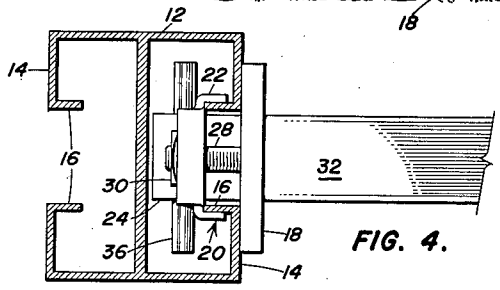

FIG. 4.

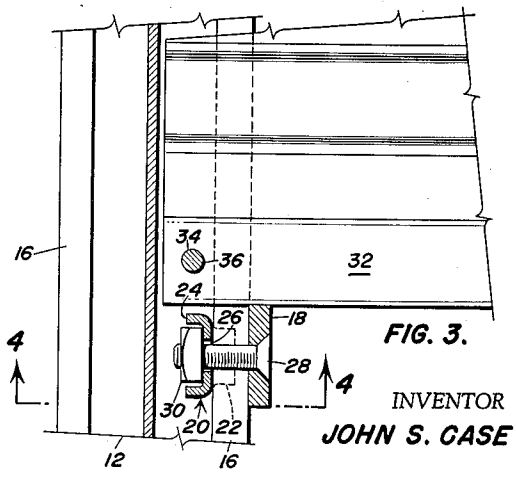

FIG. 3.

INVENTOR
JOHN S. CASE

BY Walter J. Finch
ATTORNEY

United States Patent Office

3,120,376

Patented Feb. 4, 1964

1

3,120,376

BOARD FENCE INCLUDING METHOD OF SECURING BOARD MEMBERS TO LINE AND/OR CORNER POST

John S. Case, Baltimore, Md., assignor to Anchor Post Products, Inc., Baltimore, Md., a corporation of New Jersey

Filed June 5, 1961, Ser. No. 114,738
2 Claims. (Cl. 256—24)

This invention relates generally to fence structures, and more particularly it pertains to a basket weave board fence.

A style of fence enjoying considerable popularity is known as basket weave. In this type of fence, horizontal boards are used between line posts and one or more vertical rods are interwoven with the boards to provide an ornamented as well as ventilative function.

It is an object of the present invention, therefore, to provide a basket weave type of fence which can be erected easily and which shows a minimum amount of hardware.

Another object of this invention is to provide a horizontal board fence which is self-adapting to sloped terrain.

And another object of this invention is to provide an anchorage for the boards of a woven fence which is simple self-captivating and has high tensile strength to withstand the weaving of the boards.

And yet another object of this invention is to provide a support plate for adjustably aligning a stack of horizontal boards of a woven fence.

These and other objects and attendant advantages of this invention will become more readily apparent and understood from the following detailed specification and single sheet of accompanying drawings in which:

FIG. 1 is an elevation of an improved basket weave fence incorporating features of this invention;

FIG. 2 is an enlarged perspective exploded view, partly broken away, showing details of the improved fence of FIG. 1;

FIG. 3 is a vertical section taken on the line 3—3 of FIG. 2; and

FIG. 4 is a cross section taken on line 4—4 of FIG. 3.

Referring now to FIG. 1 of the drawings, the improved fence 10 incorporating features of this invention consists of a plurality of spaced line posts 12 upon which are mounted a plurality of horizontal fence boards 32, stacked edgewise.

As best shown in FIGS. 2 and 4, each line post 12 is made from a length of extruded metal having a generally modified H-shaped cross section with end flanges 14 and re-entrant inner flanges 16.

The line posts 12 are set into the ground on centers slightly greater than the lengths of the boards 32. Each board 32 is provided with at least one corner hole 34 which is drilled to receive a keeper pin 36.

Each board 32 is of such thickness as to freely fit between the inner flanges 16 of the line posts and is retained therebehind by means of the pins 36 in the corner holes 34.

The lowermost board 32 rests upon a support plate 18 and the remainder of the boards 32 are stacked edgewise one upon the other. A cap 38 is next driven force-fit into the top of each thus assembled line post 12. A rod 40 is then interwoven with the boards 32 intermediate the posts 12.

To suitably close any vertical gap between the boards 32, the support plate 18 is made of adjustable design, as

2

best shown in FIGS. 3 and 4. This plate 18 is used with a clip 20. The clip 20 is stamped from sheet metal so as to provide a spaced pair of vertical side flanges 22 which are dimensioned to embrace the inner flanges 16 of a line post 12.

A pair of horizontal flanges 24 are provided on the clip 20 and then extend rearwardly to receive a square nut 30 positioned behind an aperture 26. A bolt 28 passed through the support plate 18 completes the adjustable arrangement thereof.

Obviously many modifications and variations of the present invention are possible in light of the above teachings. It is, therefore, to be understood that within the scope of the appended claims the invention may be practiced otherwise than as specifically described.

What is claimed is:

1. A fence structure, comprising, at least a pair of spaced posts, each said post being of channel shape and having at least a web with parallel extending spaced legs, a flange element extending inwardly from each leg with a re-entrant flange extending inwardly from said flange element toward said web of said post, means including a support member spanning the inwardly extending flange elements of each post and positioned substantially near the base of each post, a plurality of edgewise stacked fence board members positioned between said spaced posts and supported by said support members on said spaced posts, with each fence board member being of sufficient thickness at its ends to freely fit between its respective re-entrant inner flanges of each post, and means at a pair of diagonal corners of each fence board member for pivotally mounting each fence board member about said means between its respective re-entrant flanges and web, the remaining width of the end portions of each fence board member being free of projections whereby said end portions are freely fittable between said re-entrant flanges.

2. A fence structure, comprising, at least a pair of spaced posts, each said post being of channel shape and having at least a web with parallel extending spaced legs, a flange element extending inwardly from each leg with a re-entrant flange extending inwardly from said flange element toward said web of said post, means including a support member spanning the inwardly extending flange elements of each post and positioned substantially near the base of each post, a plurality of edgewise stacked fence board members positioned between said spaced posts and supported by said support members on said spaced posts, with each fence board member being of sufficient thickness at its ends to freely fit between its respective re-entrant inner flanges of each post, means for adjusting said support members vertically so as to elevate as well as lower the ends of said board members, and means at a pair of diagonal corners of each fence board member for pivotally mounting each fence board member about said means between its respective re-entrant flanges and web, the remaining width of the end portions of each fence board member being free of projections whereby said end portions are freely fittable between said re-entrant flanges permitting said fence board members to be adjusted for sloping terrain.

References Cited in the file of this patent

UNITED STATES PATENTS

830,437	Humphrey	Sept. 4, 1906
2,890,023	Baxter et al.	June 9, 1959