(12) INTERNATIONAL APPLICATION PUBLISHED UNDER THE PATENT COOPERATION TREATY (PCT)

(19) World Intellectual Property Organization
International Bureau

(43) International Publication Date
29 April 2010 (29.04.2010)

PCT

(10) International Publication Number
WO 2010/046740 A2

(51) International Patent Classification:
F24J2/32 (2006.01) *F24J 2/34* (2006.01)

(21) International Application Number:
PCT/IB2009/006987

(22) International Filing Date:
29 September 2009 (29.09.2009)

(25) Filing Language: English

(26) Publication Language: English

(30) Priority Data:
BA2008A000044 23 October 2008 (23. 10.2008) IT

(72) Inventor; and
(71) Applicant : GIANNELLI, Mario [IT/IT]; Via Monte Rosa No. 14, 1-73040 Melissano (LE) (IT).

(74) Agent: BRUNI, Giovanni; Laforgia, Bruni & Partners, Corso Duca Degli Abruzzi, 78, 1-10129 Torino (IT).

(81) Designated States *(unless otherwise indicated, for every kind of national protection available):* AE, AG, AL, AM, AO, AT, AU, AZ, BA, BB, BG, BH, BR, BW, BY, BZ, CA, CH, CL, CN, CO, CR, CU, CZ, DE, DK, DM, DO, DZ, EC, EE, EG, ES, FI, GB, GD, GE, GH, GM, GT, HN, HR, HU, ID, IL, IN, IS, JP, KE, KG, KM, KN, KP, KR, KZ, LA, LC, LK, LR, LS, LT, LU, LY, MA, MD, ME, MG, MK, MN, MW, MX, MY, MZ, NA, NG, NI, NO, NZ, OM, PE, PG, PH, PL, PT, RO, RS, RU, SC, SD, SE, SG, SK, SL, SM, ST, SV, SY, TJ, TM, TN, TR, TT, TZ, UA, UG, US, UZ, VC, VN, ZA, ZM, ZW.

(84) Designated States *(unless otherwise indicated, for every kind of regional protection available):* ARIPO (BW, GH, GM, KE, LS, MW, MZ, NA, SD, SL, SZ, TZ, UG, ZM, ZW), Eurasian (AM, AZ, BY, KG, KZ, MD, RU, TJ, TM), European (AT, BE, BG, CH, CY, CZ, DE, DK, EE, ES, FI, FR, GB, GR, HR, HU, IE, IS, **IT,** LT, LU, LV, MC, MK, MT, NL, NO, PL, PT, RO, SE, SI, SK, SM, TR), OAPI (BF, BJ, CF, CG, CI, CM, GA, GN, GQ, GW, ML, MR, NE, SN, TD, TG).

Published:

— *without international search report and to be republished upon receipt of that report (Rule 48.2(g))*

(54) Title: SOLAR HEATING SYSTEM FOR WARMING HOT WATER BASED ON THE PRINCIPLE OF HEAT EXCHANGE THROUGH THE PHASE-CHANGE PROCESS OF EVAPORATION AND CONDENSATION

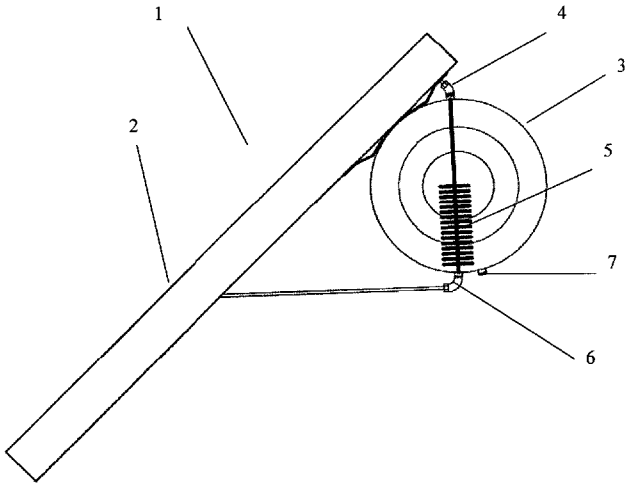

Fig. 1

(57) Abstract: Solar heating system for providing hot water based on the principle of heat exchange through the phase-change process of evaporation and condensation, comprising at least a storage tank (3) and at least a primary circuit, provided at least with a solar collector (2), at least a heat exchanger (5), and means (4, 6) for connecting the heat exchanger (5) to the solar collector (2), characterized in that said primary circuit allows to transfer heat from the hot end to the cold end of the circuit by means of evaporation and condensation of the fluid contained therein; said storage tank (3) is arranged horizontally or sub- horizontally.

WO 2010/046740 A2

SOIAR HEATING SYSTEM FOR WARMING HOT WATER BASED ON THE PRINCIPLE OF HEAT EXCHANGE THROUGH THE PHASE-CHANGE PROCESS OF EVAPORATION AND CONDENSATION

Description

The present invention relates to a solar heating system for providing hot water based on the principle of heat exchange through the phase-change process of evaporation and condensation, with improved thermal and usability efficiency features.

Few similar systems are known in the art. A solar heating system is usually made up of a collector (also called panel) which receives solar energy from an exchanger, where the fluid used to transfer it to the tank needed to receive the stored energy, circulates. The system can be of the natural or forced circulation type.

In particular, a solar heating system of the natural circulation type uses the principle of thermal convection to circulate the vector fluid therethrough. As the vector liquid gets heated in the solar panel, it expands and floats, and therefore goes back to the exchanger arranged inside the storage tank. The liquid in the exchanger releases heat to the water in the tank and as it cools, it goes back to the collector,

ready to start a new cycle. The vector fluid used in the primary circuit of the exchanger is usually non-toxic propylene glycol (commonly known as antifreeze) mixed to water in such a percentage to guarantee a suitable resistance to freezing. The tank is usually arranged horizontally or vertically, outside the panel profile, usually at a height greater than the solar panel one.

This arrangement is simpler and cheaper than the one of the forced circulation type. There is no electric consumption due to the circulation pump and the differential solar controller provided in the system of the forced circulation type. A system of the natural circulation type is however less efficient than the one of the forced type, and more sensible to charge losses of the primary circuit; therefore it is needed that the storage tank is to be arranged very close to the solar panel and at a greater height in order to avoid the night reverse-cycle and the subsequent stored heat dissipation.

EP 0574954 A2 describes another example known in the art. Here, the solar heating system made up of a panel, a heat exchanger and a tank is characterized in that the inclined solar panel and the tank are integrated to form a unique triangular-based parallelepiped body for heating

the cold water contained in the tank directly during the panel irradiation. Clearly, said solar heating systems provide many disadvantages both concerning the efficiency and the usability in the installation and maintenance steps of the system. In fact, when the system is arranged outside on saddle roofs, the system efficiency is compromised mainly due to the geometry of the storage tank, which does not allow to position the panel with the optimum inclination, unless the roof is modified in order to embed therein the tank or a portion thereof .

An object of the present invention is to solve the above-described drawbacks concerning the low efficiency and effectiveness of the traditional solar heating systems, also when applied on saddle roofs, mainly guaranteeing an optimum panel inclination, and to avoid the initiation of parasitic reverse flow circulations in order to maximize the system thermal efficiency.

The present invention solves the prefixed objects in that it is a solar heating system for providing hot water, as for example the one used in the sanitary field, based on the principle of the heat exchange through the phase-change process of evaporation and condensation, which comprises at

least a storage tank and at least a primary circuit with the features described in claims 1-3.

These and other advantages will be highlighted in the following detailed description, referring to drawing 1/1, which shows a not limiting and preferred embodiment of the invention:

Fig. 1 shows the side view of the invention;

Fig. 2 shows an example of arrangement of said system on a roof, by means of a system schematic view (fig. 2a) and another view of the properly installed system (fig. 2b).

Referring to said figures, the solar heating system for providing hot water based on the principle of heat exchange through the phase-change process of evaporation and condensation according to the invention is generally indicated by the reference number 1. It comprises at least a storage tank 3 and at least a primary circuit provided with at least a solar collector 2, at least a heat exchanger 5, means (4, 6) for connecting the heat exchanger (5) to the solar collector (2).

Said primary circuit, which is closed and sealed, contains a small quantity of thermal-vector fluid (water, alcohol or other suitable fluid) while the remaining portion is full of the liquid vapour.

The solar collector 2, which is sun-irradiated or put in contact with a thermal energy source, releases heat to the liquid contained in the circuit, which vaporizes thus increasing the vapour pressure in the component. The latent vaporization heat absorbed by the liquid reduces the temperature of the collector 2. The vapour differential pressure between the hot portion (collector 2) and the cold portion (exchanger 5) causes rapid vapour transfer to the "cold" portion of the circuit. In the heat exchanger 5, the excess vapour condensates releasing heat of condensation to the fluid, which dampens the exchanger 5. Therefore, a rapid heat transfer from the hot portion, the collector 2, to the cold portion of the circuit, the heat exchanger 5 contained in the storage tank 3, is obtained.

Said heat exchanger 5 is apt to heat the water flow of the system, as for example, the sanitary and/or heating one contained in the storage tank 3, without contaminating it. Said tank 3 comprises at least a means, cold water input/hot water output 7, for connecting the tank 3 to the system, as for example, the sanitary and/or heating one. Moreover, said storage tank 3 is arranged horizontally or sub-horizontally, in particular, both under the collector 2 and outside the profile of the

collector 2 at a height greater than or equal to the collector 2.

Referring by way of example to the integrated system of fig. 2, said solar heating system 1, in a particular embodiment, is characterized in that it is of pre-assembled mono-block type, as well as easily covered by means of coverings to form some sort of a dormer and the like.

Obviously, the above-described embodiment is only by way of example and does not limit the present invention.

The advantages of the present invention are clear: firstly the solar heating system efficiency is increased by positioning the panel with the best inclination; a rapid and effective exchange mechanism is used; and finally, the initiation of parasitic reverse circulations is avoided as the system structural features prevent the heat stored in the tank from evaporating the fluid contained in the lower portion of the collector.

Said system is also advantageous in that it is small dimensioned when in the storage step, thanks to the possibility to arrange the systems in vertical, with the tanks facing inwards, and in that it can be easily transported to the user.

Moreover, it is very advantageous in that it offers a nice visual impact as a whole: in fact it is possible to harmoniously integrate it both on saddle roofs in the dormer form and on traditional roofs without compromising the building and the surrounding environment appearance; moreover, multiple applications of the single module are possible in order to satisfy the middle-high users needs .

In a possible particular embodiment, in a mini pre-assembled and charged variant, beside the advantages of the classical system, said system is further advantageous in that it can be sold as a kit for domestic works, as well as used in series and/or parallel configurations by means of simple juxtaposition interventions of the system both on building roofs and mobile structures as for example, campers, containers and the like.

CLAIMS

1. Solar heating system for providing hot water based on the principle of heat exchange through the phase-change process of evaporation and condensation, comprising at least a storage tank (3) and at least a primary circuit, provided at least with a solar collector (2), at least a heat exchanger (5), and means (4, 6) for connecting the heat exchanger (5) to the solar collector (2), characterized in that:

- said primary circuit allows to transfer heat from the hot end to the cold end of the circuit by means of evaporation and condensation of the fluid contained therein.
- said storage tank (3) is arranged horizontally or sub-horizontally.

2. Solar heating system according to claim 1, characterized in that said storage tank (3) is arranged horizontally or sub-horizontally under the collector (2).

3. Solar heating system according to claim 1, characterized in that said storage tank (3) is arranged horizontally or sub-horizontally outside the profile of the collector (2) at a height greater than or equal to the collector (2).

4. Solar heating system according to claim 2 or 3, characterized in that the heat exchanger (5) is contained in the storage tank (3).

5. Solar heating system according to any *one* of the preceding claims, characterized in that said primary circuit is closed and sealed.

6. Solar heating system according to any one of the preceding claims, characterized in that said storage tank (3) comprises at least a means, cold water input/hot water output (7), for connecting the tank (3) to the system, as for example the sanitary and/or the heating one.

7. Solar heating system according to any one of the preceding claims, characterized in that said system is of the pre-assembled mono-block type.

8. Solar heating system according to any one of claims 1 to 6, characterized in that said system is modular, with the possibility to be assembled in *loco.*

9. Solar heating system according to any one of the preceding claims, characterized in that it is covered by means of coverings to form some sort of a dormer or the like.

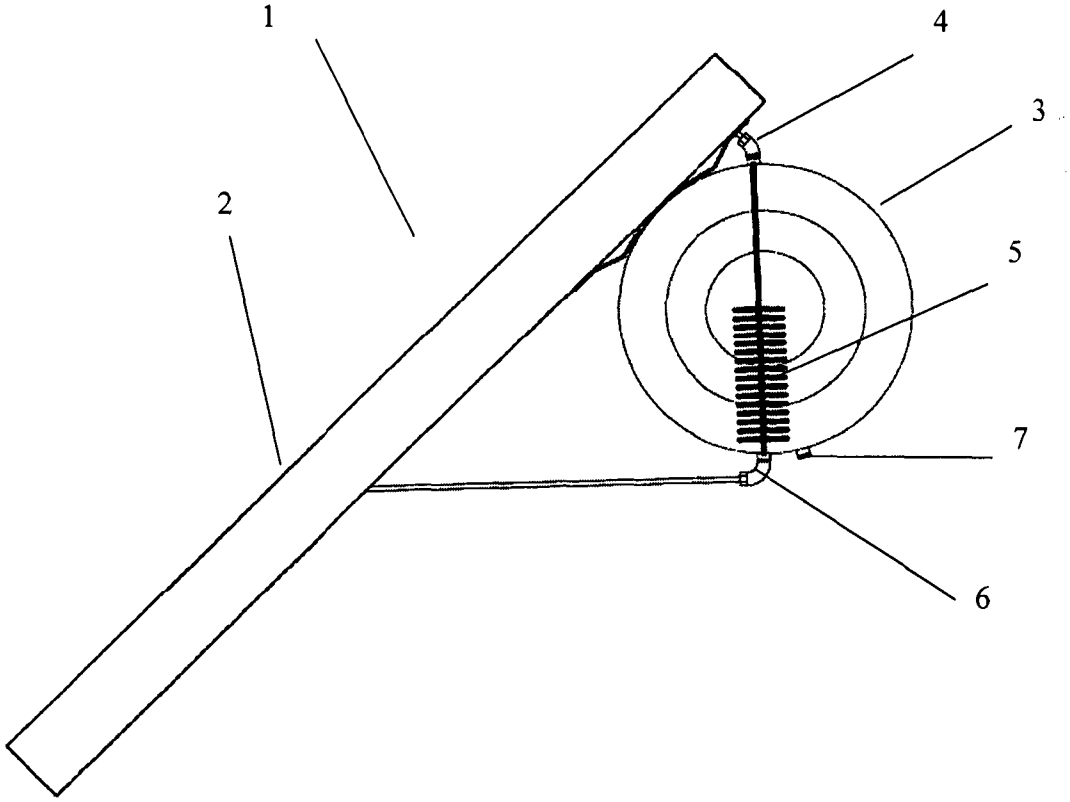

Fig. 1

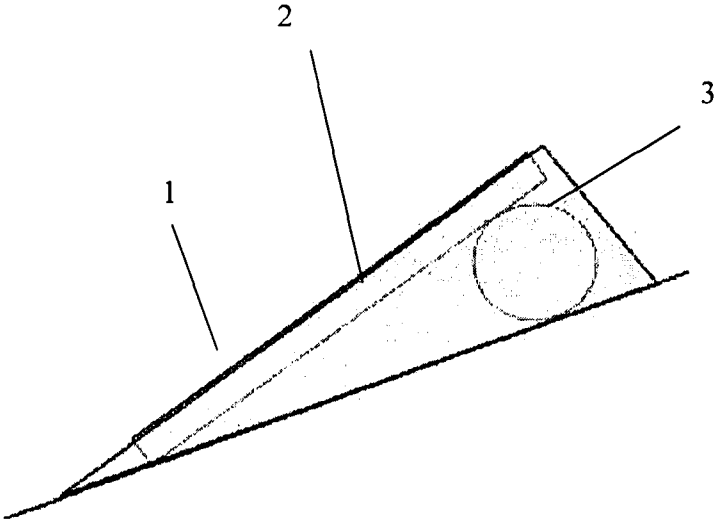

Fig. 2a

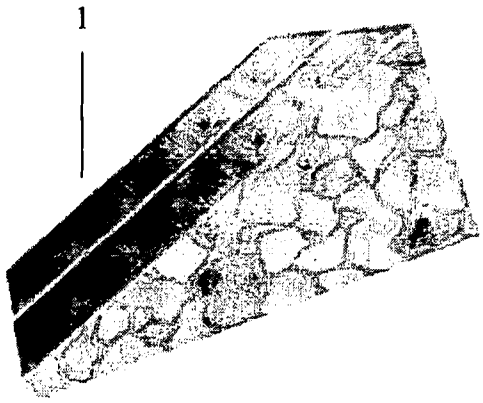

Fig. 2b