Nov. 20, 1928.

D. B. REPLOGLE

1,692,517

CORD REEL

Filed Aug. 20, 1923

Fig. 1

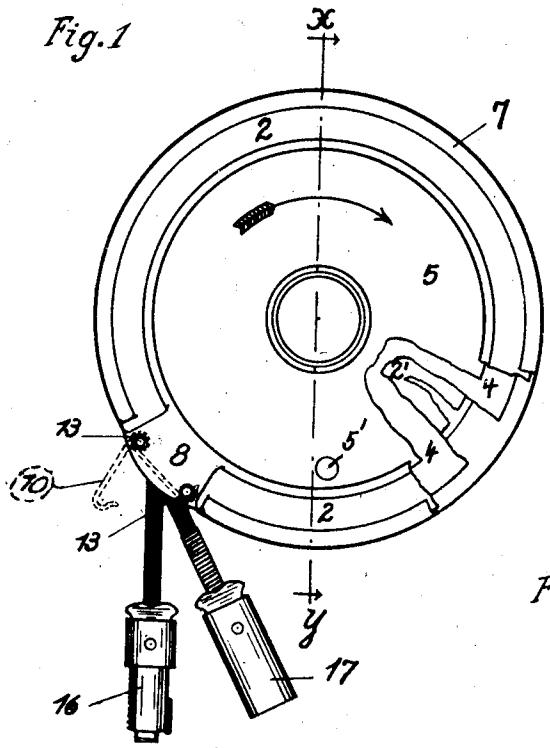

Fig. 2

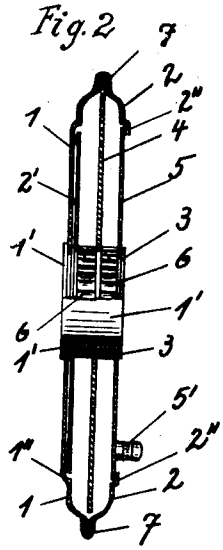

Fig. 3

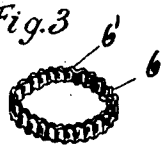

Fig. 4

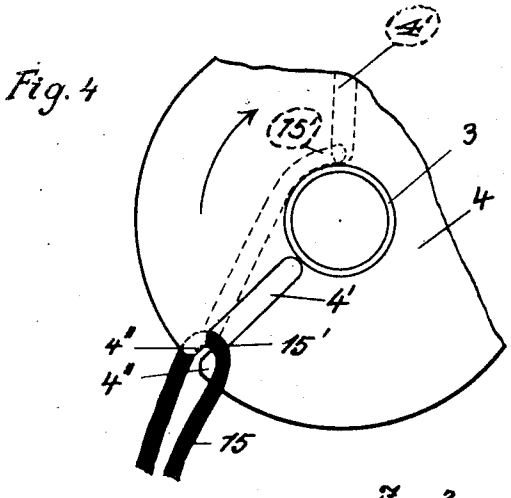

Fig. 5

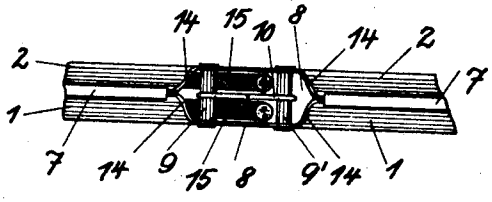

Fig. 6

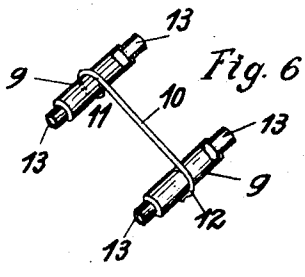

Fig. 7

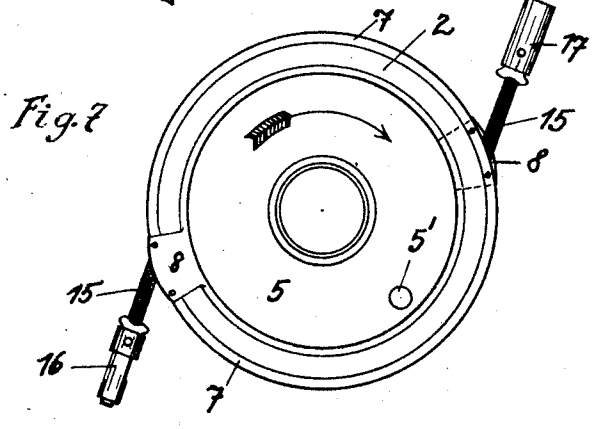

Inventor:
D. B. Replogle

Patented Nov. 20, 1928. 1,692,517

UNITED STATES PATENT OFFICE.

DANIEL BENSON REPLOGLE, OF BERKELEY, CALIFORNIA, ASSIGNOR TO COMMERCE GUARDIAN TRUST AND SAVINGS BANK, TRUSTEE, OF TOLEDO, OHIO.

CORD REEL.

Application filed August 20, 1923, Serial No. 658,349, and in Germany about June 21, 1923.

This invention relates to devices for housing cords or ropes of a given length, and has for its objects to provide a light weight, strong and convenient portable reel in which to wind a service cord for electrically connecting electric appliances; to render the same safe from soil and injury, to remove the tangles therefrom after use, to render the same in a readily accessible package, to make the same convenient to handle; and to house and protect cords or ropes used for other purposes.

To these ends the invention consists in the construction and arrangement of parts and devices as set forth herein and illustrated in the accompanying drawings in which—

Fig. 1 shows a side elevation of the preferred form of the device, suggesting the position of the ends of a service cord when wound therein, but having parts broken away to show the interior arrangement of the parts. Fig. 2 is a section taken on the line X—Y of Figure 1 to further show the interior. Fig. 3 is a perspective view of one of the spacing rings from the central portion of the device. Fig. 4 shows a portion of the central or middle revolving disc, and suggests the method of hooking into it, the cord to be wound. Fig. 5 is an edge elevation of the mouth portion of the device. Fig. 6 shows detail of parts used in constructing the mouth portion. Fig. 7 suggests a substitute form or modification of the device wherein the ends of the cord to be wound extend out from opposite sides of the reel, instead of both from the same side.

Like characters of reference denote like parts thruout the views in which—1 denotes an encasing pan-shaped disc and 2 a ring portion of a similar formed disc, reversed and facing the same to form an annular dish-shaped enclosure inside of which the assembled winding spool revolves. The spool is made by taking a cylindrical ring 3 and passing it thru the open centres of discs 2′, a spacing ring 6, the central slotted flange or disc 4, another spacing ring 6, and the knob carrying disc 5. These are swedged together to prevent relative turning with one another, making a compact three-flange spool, turnable by the knob 5′. Before assembling the spool with the case, a spindle on which it is to turn is provided by anchoring to the central opening of the encasing disc 1, a cylindrical horn 1′ over which the ring 3 slides with a freely revolving fit. After placing it thereon, the ring 2 is faced up to the disc 1 and the two are well clamped together by the metallic clasping band 7 which clasps annular edges of each to each thruout the circumference except at the mouth 8 of the casing. It may be noted that the portion cut from the centre of ring 2, in the economy of manufacture, will serve as disc 2′; but the disc 5 is a little larger than the hole from which disc 2′ is removed, so that its annular edge rests under the annular lip 2″ of the ring portion 2, this serving as a keeper to prevent the spool from coming off its cylindrical horn or spindle 1′ in operation. It is also to be noted that the rings 6, 6 are made from metal strips with crinkles 6′, which make waved edges to the rings and serve to make better frictional engagement with the discs assembled.

The mouth 8 of the assembled article or device is formed by spreading braces 9 and 9′ having cylindrical shanks 13, 13 each extending thru and clinched to peripheral edges of the case members 1 and 2 which are here bent outwards by recurves 14 and 14 on each. To the middle of one of them, 9, a wire detent 10 is secured at 11, and has a hook 12 adapted to clasp over the middle of the other brace 9′, and to lie between the two separate portions of the cord to be wound, but may be unhooked for removal and replacement of the cord 15 to be wound or housed in the completed device.

The operation of the device is readily apparent. A cord 15 is inserted by first bending a sharp loop 15′ at the middle of its length, and this loop is slipped into the radial slot 4′ of the central spool flange, by temporarily staggering the tips 4″, 4″ of the slitted periphery and passing the loop between them. After thus inserting the loop, the cord is wound in by turning of the spool with reference to the casing, and a separate portion of the cord is spirally wound on either side of said flange, the spaces being such that in width they will accommodate but one thickness of the cord, while the spaces are filled by spirally winding upon themselves, the separate halves of the cord, one on either side of the middle flange or disc without any possibility of crossing or tangling. Furthermore, as is apparent, the round exteriors of the braces 9 and 9′ with the detent 10 lying between them, serve to remove twists and tangles from the two portions of the cord and direct each to its own side of the housing. In

service, as for instance, a service extension electric conduction may be partly wound or unwound, its plug 16 connecting with any source of electricity, and its socket 17 connecting with any appliance, as flat-iron or sweeping machine, while the reel may hang on a suitable peg extending thru the central opening of the spindle 1′ of the device, thus keeping that part of the cord not actually needed off the floor and out of the way of the worker.

A particular advantage in handling the cord is to be noted due to the central opening just referred to. This hole provides place for the fingers in grasping the reel, since the thumb and fingers may span from the hole to the periphery of the device. When thus held by one hand, the end connections of the cord may be grasped by the other and by a simultaneous pull on both ends of the cord is unwound in a very quick manner; the construction of the central opening being such that no moving part is exposed to the grasping hand since the cylindrical horn or spindle 1′ is either integrally made with the cover disc 1 or rigidly secured to it.

In the substitute form, the cord has the same relation and position with respect to the interior discs, save that one end of the cord is carried half way round further than the other and brought out thru a mouth at the opposite side of the housing. The two mouths necessary are provided by clamping the disc 1 to the ring 2 with the mouth portions 180 degrees apart. When thus assembled, it is clearly unnecessary to have the detent 10 to lie between the entering portions of cord; but to insert the cord, it is necessary to remove an end connection and pass the cord endwise thru from side to side until its middle loop can be carried around as explained in the preferred form. In inserting the cord in the preferred form, it is necessary to swing the detent out of the way as suggested in dotted lines in Figure 1, so that the middle loop may be extended to the slot 4′, which hooks it along around when the spool is turned in the direction indicated by the arrows,—as indicated in dotted lines in Figure 4.

Having thus described the invention and its operation, it is not intended to be confined to the specific constructions indicated, for great variation may be had without departing from the general spirit of the invention; which I broadly claim as follows:

1. A cord reel comprising essentially a dish shaped cover and a thin spool, the said cover having a rigidly anchored central bearing member on which the spool is adapted to be revolved, said spool being provided with a central slotted disk adapted to have looped therethrough the cord to be wound, and a separate disk adapted to make a closure of the cover when the spool is in place.

2. In a cord reel, a cover having a disk shaped side with a peripheral rim and having a central opening, peripheral openings through said rim at opposite sides thereof, a central cylindrical bearing member in said cover rigidly secured around said central opening, a spool revolubly mounted on said bearing member and adapted to have a doubled cord wound thereon, the opposite end portions of said cord extending out through the peripheral openings in the rim of the cover.

3. In a cord reel of the kind described, a cover having a disk shaped side with a relatively large central opening, a bearing member rigidly secured at said opening, a spool having an open centered drum adapted to fit revolubly on the bearing member aforesaid and within the cover, a central and an outer disk on said spool, the central disk having a slot adapted to have a cord to be wound looped therethrough and the outer disk provided with means for applying the hand to revolve the spool within the cover.

4. In combination, a dish-shaped cover having a flat wall with a relatively large open centre, a peripheral rim having cord passages therethru, and a horn rigidly secured to said open centre, a spool revolvably mounted on said horn as a spindle and adapted to be revolved within said cover, a central disc on said spool having a slot therein, a cord looped thru said slot, one portion of the same adapted to be wound on one side of said central disc, an outer disc on said spool and the other portion of said cord adapted to be wound on the other side of said central disc between said central disc and said outer disc, the ends of said cord extending thru the openings in the peripheral rim aforesaid, together with means for revolving said spool within the cover.

5. An annular chambered cord-housing member with rigid continuous walls and an open unobstructed center, one side of said housing member being open, in combination with an open centered spool member adapted to fill and to be revolved within the annular chamber and about the open center thereof, said spool being provided with a disk shaped side adapted to close the opening in said housing member when the spool is in place.

In testimony whereof I affix my signature.

DANIEL BENSON REPLOGLE.