Office de la Propriété Intellectuelle du Canada
Un organisme d'Industrie Canada

Canadian Intellectual Property Office
An agency of Industry Canada

CA 2843220 A1 2013/02/07

(21) 2 843 220

(12) DEMANDE DE BREVET CANADIEN
CANADIAN PATENT APPLICATION

(13) A1

(86) Date de dépôt PCT/PCT Filing Date: 2012/08/03
(87) Date publication PCT/PCT Publication Date: 2013/02/07
(85) Entrée phase nationale/National Entry: 2014/01/24
(86) N° demande PCT/PCT Application No.: US 2012/049473
(87) N° publication PCT/PCT Publication No.: 2013/020027
(30) Priorités/Priorities: 2011/08/03 (US61/514,852);
2011/09/23 (US61/538,685)

(51) Cl.Int./Int.Cl. *F16B 37/08* (2006.01),
F16B 39/28 (2006.01)

(71) Demandeur/Applicant:
QWIKLINE INDUSTRIAL PRODUCTS, INC., US

(72) Inventeur/Inventor:
STEFFL, KEVIN, US

(74) Agent: FASKEN MARTINEAU DUMOULIN LLP

(54) Titre : SYSTEME DE FIXATION PAR COMPRESSION A ECROU FENDU
(54) Title: SPLIT NUT COMPRESSION FASTENER SYSTEM

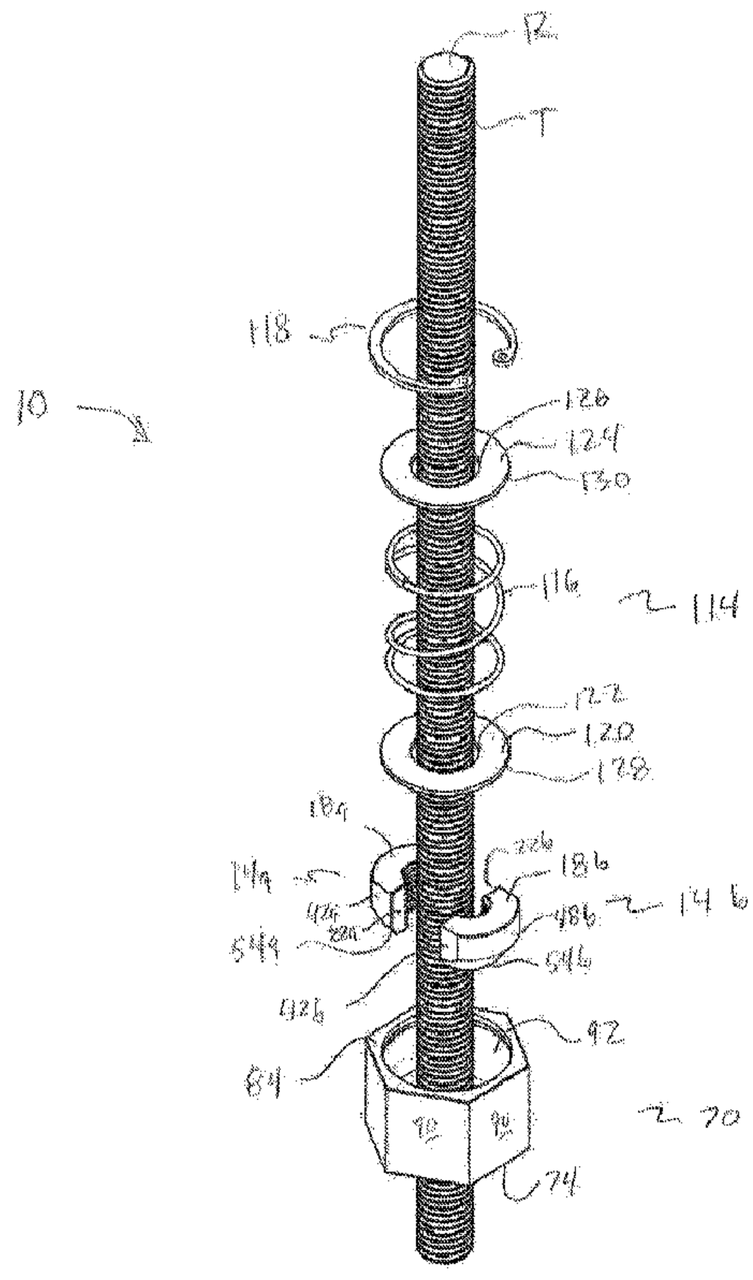

FIGURE 1

(57) Abrégé/Abstract:
A split nut compression fastener system includes a pair of half nuts having a beveled end and opposed flats; a nut housing having a cavity, the cavity including an end wall with an aperture and a tapered interior portion to engage the beveled end, and opposing

CA 2843220 A1 2013/02/07

(21) 2 843 220

(13) A1

(57) Abrégé(suite)/Abstract(continued):
internal flats to engage the half nut flats; a resilient member to urge the beveled ends against the tapered portion; and retaining element. The half nuts may include tapered thread edges to accommodate damaged male threads, or cutting thread edges to repair damaged mail threads. The system may include a pair of stacked nut assemblies with an interlineal compression member disposed between them. The system may include a nut assembly in combination with a vertical hold down. The system includes multiple sets of half nuts for different thread sizes which may be interchanged within a common nut housing. The system may include each half nut having a plurality of thread portions, each thread portion having a thread cutting edge. The system may include each half nut including a second end wall displaced inwardly from the first end wall to form a projecting shoulder, a third flat, and a corresponding recess in the projecting inferior flat to engage the projecting shoulder.

(12) INTERNATIONAL APPLICATION PUBLISHED UNDER THE PATENT COOPERATION TREATY (PCT)

(19) World Intellectual Property Organization
International Bureau

(43) International Publication Date
7 February 2013 (07.02.2013)

WIPO | PCT

(10) International Publication Number
WO 2013/020027 A1

(51) International Patent Classification:
F16B 37/08 (2006.01) *F16B 39/28* (2006.01)

(21) International Application Number:
PCT/US2012/049473

(22) International Filing Date:
3 August 2012 (03.08.2012)

(25) Filing Language: English

(26) Publication Language: English

(30) Priority Data:
61/514,852 3 August 2011 (03.08.2011) US
61/538,685 23 September 2011 (23.09.2011) US

(72) Inventor; and
(71) Applicant : **STEFFL, Kevin** [US/US]; 10417 NW 3rd Place, Vancouver, WA 98685 (US).

(74) Agent: **RYLANDER & ASSOCIATES PC**; PO Box 250, Vancouver, WA 98666 (US).

(81) Designated States *(unless otherwise indicated, for every kind of national protection available)*: AE, AG, AL, AM, AO, AT, AU, AZ, BA, BB, BG, BH, BN, BR, BW, BY, BZ, CA, CH, CL, CN, CO, CR, CU, CZ, DE, DK, DM, DO, DZ, EC, EE, EG, ES, FI, GB, GD, GE, GH, GM, GT, HN, HR, HU, ID, IL, IN, IS, JP, KE, KG, KM, KN, KP, KR, KZ, LA, LC, LK, LR, LS, LT, LU, LY, MA, MD, ME, MG, MK, MN, MW, MX, MY, MZ, NA, NG, NI, NO, NZ, OM, PE, PG, PH, PL, PT, QA, RO, RS, RU, RW, SC, SD, SE, SG, SK, SL, SM, ST, SV, SY, TH, TJ, TM, TN, TR, TT, TZ, UA, UG, US, UZ, VC, VN, ZA, ZM, ZW.

(84) Designated States *(unless otherwise indicated, for every kind of regional protection available)*: ARIPO (BW, GH, GM, KE, LR, LS, MW, MZ, NA, RW, SD, SL, SZ, TZ, UG, ZM, ZW), Eurasian (AM, AZ, BY, KG, KZ, RU, TJ, TM), European (AL, AT, BE, BG, CH, CY, CZ, DE, DK, EE, ES, FI, FR, GB, GR, HR, HU, IE, IS, IT, LT, LU, LV, MC, MK, MT, NL, NO, PL, PT, RO, RS, SE, SI, SK, SM, TR), OAPI (BF, BJ, CF, CG, CI, CM, GA, GN, GQ, GW, ML, MR, NE, SN, TD, TG).

[Continued on next page]

(54) Title: SPLIT NUT COMPRESSION FASTENER SYSTEM

(57) Abstract: A split nut compression fastener system includes a pair of half nuts having a beveled end and opposed flats; a nut housing having a cavity, the cavity including an end wall with an aperture and a tapered interior portion to engage the beveled end, and opposing internal flats to engage the half nut flats; a resilient member to urge the beveled ends against the tapered portion; and retaining element. The half nuts may include tapered thread edges to accommodate damaged male threads, or cutting thread edges to repair damaged mail threads. The system may include a pair of stacked nut assemblies with an interlineal compression member disposed between them. The system may include a nut assembly in combination with a vertical hold down. The system includes multiple sets of half nuts for different thread sizes which may be interchanged within a common nut housing. The system may include each half nut having a plurality of thread portions, each thread portion having a thread cutting edge. The system may include each half nut including a second end wall displaced inwardly from the first end wall to form a projecting shoulder, a third flat, and a corresponding recess in the projecting inferior flat to engage the projecting shoulder.

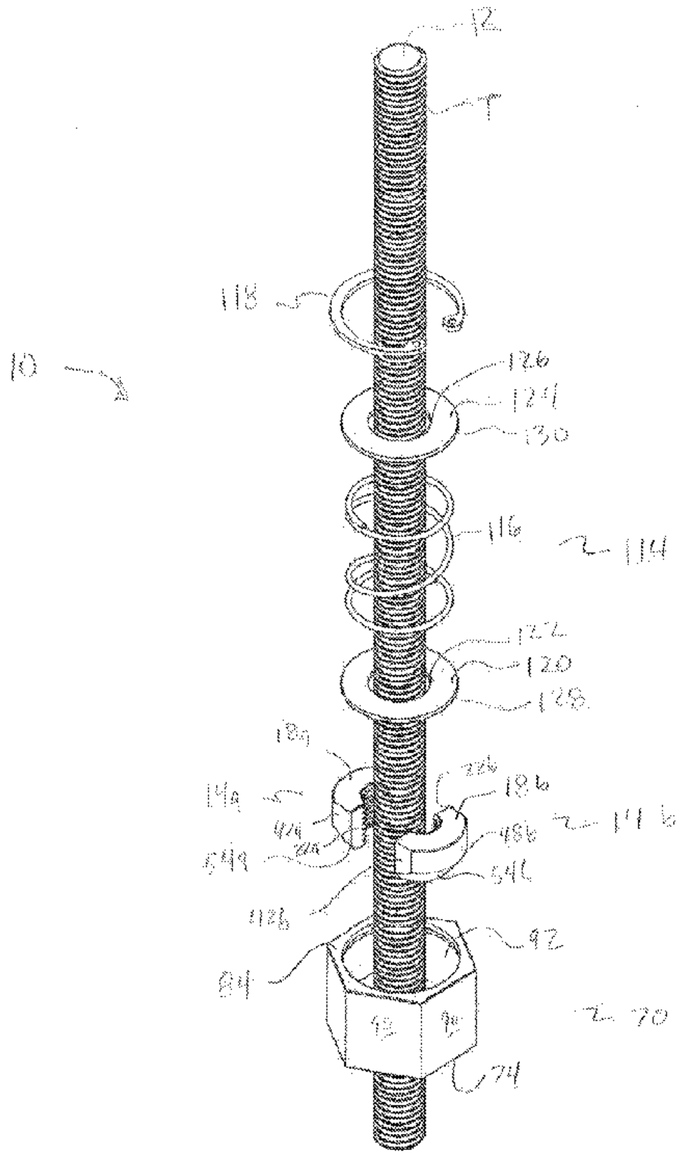
12
T
118
10
126
124
130
116
114
122
120
128
186
184
184
186
186
186

WO 2013/020027 A1

Declarations under Rule 4.17:

— *of inventorship (Rule 4.17(iv))*

Published:

— *with international search report (Art. 21(3))*

— *before the expiration of the time limit for amending the claims and to be republished in the event of receipt of amendments (Rule 48.2(h))*

SPLIT NUT COMPRESSION FASTENER SYSTEM

FIELD OF THE INVENTION

[0001] The present invention relates to threaded fastener systems, and particularly to building hurricane and seismic restraints and thread repair devices.

BACKGROUND

[0002] The split nut compression fastener system is useful for easy application along with the ability to self-tighten as moisture content changes in wood, and to provide positive resistance against loosening caused by vibrations, flexing or seismic events. Although application in wood structures was the motivation for designing the fastener system the design has led to the realization that the system has a much wider range of applications. The fastener system can be scaled to fit any sized bolt or threaded rod simply by increasing the size of the exterior housing and interior lock threads. The fastener system has also been designed to where the user will not need to carry multiple wrenches or sockets for tightening. One size wrench or socket will be able to tighten multiple sizes of bolts before the exterior housing will adjust up to the next housing size. The steel version of the fastener system will hold against 50,000 lbf.

[0003] In the construction world there are many times during the work week when bolts or threaded rods are damaged during every day mishaps. This causes loss of time when hired employees go to install an average nut to damaged threads on a bolt or threaded rod. When threads get damaged, the employee will need to replace or repair the threaded surface before a nut can be applied. This results in higher a cost of construction.

[0004] Discovery of damaged threads on a threaded rod or bolt typically requires replacement for the rod. This sounds easy enough except when jobs are supplied with just the right amount of nuts and bolts for the job at hand. The result is the need for the employer or employee to travel to the nearest supply store to purchase a new bolt. Many bolts on construction sites are not in areas where they can be easily accessed from the ground. In fact, many bolts on construction sites are applied in high, off-the-ground setting, where the employees are in a man lift, using safety ropes and harnesses, or on a ladder. Additionally, many are actually threaded rods that may have been embedded in or under other components already, and therefore very difficult to replace. Damaged threads in these situations require the employee to get to the ground, retrieve another bolt, and return to the area to apply the new bolt. The other alternative is to try and use the damaged bolt which often will lead to cross threading. Tightening a cross threaded bolt results in a weak connection and a weakening of the structural connection. Weak connections equal a weak structure.

[0005] The fastener system can be used on every bolt to speed up installation or just on damaged bolts as needed. The fastener system can be slid over and by all damaged treads on a bolt, allowing installers avoid costly delays and frustrations. Most building procedures that require bolts also require heavy equipment to install the components that need to be bolted together. The fastener system installation will save time for the connection installer that will result in less costly equipment and equipment operator time.

[0006] Threaded rods are used to hold buildings to foundation, floor-to-floor connections, roof-to-building connections, and in retrofit remodel construction. When retrofitting or remodeling an existing building, extra connections are needed by adding threaded rod to existing foundations or side wall. Like bolts, some of the threaded rods get damaged and require extra time to repair. This involves getting tools to cut or grind on the

threaded rod to repair the treads so that the nut can be applied. Threaded rods that are not repaired will also result in cross threading, which leads to weak connections.

[0007] The fastener system can be manufacture to fit any sized threaded surface. The fastener system in wood construction, where moisture content of materials may result in shrinking, may be used with a hold down or saddle. The fastener system application on wood structures will allow the nuts to self-tighten on bolts or threaded rods as the building materials shrink. The fastener system allows connections on wood to stay tight as the connection hardware was engineered to do. The fastener system in non-shrinking material is designed to be installed directly to raw surfaces and tightened.

[0008] Lumber may shrink significantly after construction installation. For example, a "2-by-10" board may be delivered to the job site at its nominal 9 ½ inch width by 1 9/16 inch thickness, but six months after installation it may be only 9 ¼ inches wide and 1 7/16 inches thick. Similarly, a "2-by-4" may be delivered to a job site at its nominal 1 9/16 inch thickness, but after six months it may have shrunk to 1 7/16 inches thick. While this can be problematic in any construction setting and must be accounted for, it creates special difficulties for installing seismic restraints and hurricane restraints, where significant shrinkage over time may render the bolted hold downs loose and ineffective. In other words, although conventional hold down systems may prevent a nut from backing off a threaded rod, they will not maintain the nut tight against the wood members as they shrink.

[0009] A number of devices have provided split nut capability, but lack the interchangeability, torque-taking ability, automatic tightening and damaged bolt capabilities of the present invention. Presently known art attempts to address this problem, but has not completely solved the problem.

SUMMARY AND ADVANTAGES

[0010] A split nut compression fastener system includes a pair of half nuts having at least one beveled end and opposed external flats; a nut housing having a cavity to receive the half nuts, the cavity including an end wall with an aperture to receive a threaded rod and a tapered interior portion to engage a half nut, and opposing internal flats to engage the half nut external flats; a resilient member to urge the half nut beveled ends against the nut housing tapered portion; and retaining element to retain the components within the nut housing. The half nuts may include tapered thread edges to accommodate damaged male threads, or cutting thread edges to repair damaged mail threads. The system may include a pair of stacked nut assemblies with an interlineal compression member disposed between them. The system may include a nut assembly in combination with a vertical hold down. The system includes multiple sets of half nuts for different thread sizes which may be interchanged within a common nut housing. The system may include each half nut having a plurality of thread portions, each thread portion having a thread cutting edge. The system may include each half nut including a second end wall displaced inwardly from the first end wall to form a projecting shoulder, a third flat, and a corresponding recess in the projecting interior flat to engage the projecting shoulder.

[0011] The fastener system of the present invention presents numerous advantages, including: (1) immunity to damaged threads; (2) flexibility to accommodate many thread sizes within a common sized nut housing; (3) interchangeability of half nut components; (4) long term stability and operation in spite of dimensional changes to the structure members; (5) self-tightening ability; (6) simplicity and labor savings; (7) flexibility of materials and manufacturing methods; (8) the ability to handle high torque loads; and, (9) the ability to repair damaged threads on installed threaded members.

[0012] Additional advantages of the invention will be set forth in part in the description which follows, and in part will be obvious from the description, or may be learned by practice of the invention. The advantages of the invention may be realized and attained by means of the instrumentalities and combinations particularly pointed out in the appended claims. Further benefits and advantages of the embodiments of the invention will become apparent from consideration of the following detailed description given with reference to the accompanying drawings, which specify and show preferred embodiments of the present invention.

BRIEF DESCRIPTION OF THE DRAWINGS

[0013] The accompanying drawings, which are incorporated into and constitute a part of this specification, illustrate one or more embodiments of the present invention and, together with the detailed description, serve to explain the principles and implementations of the invention:

FIG. 1 shows an exploded view of a first embodiment.

FIG. 2 shows a cutaway side view of a nut housing of a first embodiment, from the internal flat.

FIG. 3 shows a cutaway side view of a nut housing of a first embodiment, from the slot end.

FIG. 4 shows a perspective view of a pair of half nuts of a first embodiment.

FIG. 5 shows a perspective view of a half nut of a first embodiment.

FIG. 6 shows a cutaway view of a first embodiment nut assembly on a threaded rod, disengaged.

FIG. 7 shows a perspective view of a half nut of a second embodiment.

FIG. 8 shows a perspective view of a pair of half nuts of a second embodiment.

FIG. 9 shows an exploded cutaway side view of a third embodiment.

FIG. 10 shows an end-on view of a nut housing of a third embodiment.

FIG. 11 shows a side view of a nut housing of a third embodiment oriented on the internal flats, with internal structures shown in hidden lines.

FIG. 12 shows a side view of a nut housing of a third embodiment oriented on the slot end, with internal structures shown in hidden lines.

FIG. 13 shows a cutaway view of a third embodiment assembled.

FIG. 14 shows a cutaway view of a third embodiment engaged to a threaded rod.

FIG. 15 shows a cutaway view of a third embodiment disengaged on a threaded rod.

FIG. 16 shows an exploded partial cutaway side view of a fourth embodiment.

FIG. 17 shows an exploded perspective view of a fourth embodiment.

FIG. 18 shows a partially exploded perspective view of a fifth embodiment.

FIG. 19 shows a partially compressed perspective view of a fifth embodiment.

FIG. 20 shows a partially exploded perspective view of a sixth embodiment.

FIG. 21 shows a perspective view of a sixth embodiment, installed.

FIG. 22 shows an exploded view of a seventh embodiment.

FIG. 23 shows a perspective view of a pair of half nuts of a seventh embodiment.

FIG. 24 shows a perspective view of a pair of half nuts of a seventh embodiment.

FIG. 25 shows a perspective view of a single half nut of a seventh embodiment.

FIG. 26 shows a perspective view of a single half nut of a seventh embodiment.

FIG. 27 shows plan view of a pair of half nuts of a seventh embodiment, from the second axial end.

FIG. 28 shows a side view of a pair of half nuts of a seventh embodiment.

FIG. 29 shows plan view of a pair of half nuts of a seventh embodiment, from the first axial end.

FIG. 30 shows a side view of a half nut of a seventh embodiment, facing the interior.

FIG. 31 shows a cross section cutaway view of a pair of half nuts of a seventh embodiment.

FIG. 32 shows a cross section cutaway view of a pair of half nuts of a seventh embodiment.

FIG. 33 shows a perspective view of the interior of a nut housing of a seventh embodiment.

FIG. 34 shows a cutaway view of a nut housing of a seventh embodiment.

FIG. 35 shows a cutaway view of a nut housing of a seventh embodiment.

FIG. 36 shows a tool for operating a seventh embodiment.

FIG. 37 shows a top perspective view of a pair of half nuts of a seventh embodiment.

FIG. 38 shows a side perspective view of a pair of half nuts of a seventh embodiment.

FIG. 39 shows an interior detail view of a half nut of a seventh embodiment.

FIG. 40 shows a perspective view of the interior of a nut housing of a seventh embodiment.

FIG. 41 shows a bottom perspective view of a pair of half nuts of an eighth embodiment.

FIG. 42 shows an exploded view of a ninth embodiment in an opposing horizontal stacked configuration.

FIG. 43 shows a cutaway side view of a ninth embodiment in an opposing horizontal stacked configuration.

FIG. 44 shows a perspective view of a wave spring compression portion of a ninth embodiment.

FIG. 45 shows a perspective view of a flat coil retaining element of a ninth embodiment, compressed.

FIG. 46 shows a perspective view of a flat coil retaining element of a ninth embodiment, expanded.

FIG. 47 shows a cutaway view of a ninth embodiment in an inline vertically stacked configuration.

DETAILED DESCRIPTION

[0014] Before beginning a detailed description of the subject invention, mention of the following is in order. When appropriate, like reference materials and characters are used to designate identical, corresponding, or similar components in differing figure drawings. The figure drawings associated with this disclosure typically are not drawn with dimensional accuracy to scale, i.e., such drawings have been drafted with a focus on clarity of viewing and understanding rather than dimensional accuracy.

[0015] In the interest of clarity, not all of the routine features of the implementations described herein are shown and described. It will, of course, be appreciated that in the development of any such actual implementation, numerous implementation-specific decisions must be made in order to achieve the developer's specific goals, such as compliance with application- and business-related constraints, and that these specific goals will vary from one implementation to another and from one developer to another. Moreover, it will be appreciated that such a development effort might be complex and time-consuming, but would nevertheless be a routine undertaking of engineering for those of ordinary skill in the art having the benefit of this disclosure.

[0016] Referring to **Figs. 1-6**, a first embodiment of a fastener system **10** is shown. A first embodiment **10** includes a first nut assembly **12** to couple to a male threaded rod **R**, the first nut assembly **12** including opposed first and second half nuts **14a** and **14b**, a nut housing

70 to receive the first and second half nuts **14a & b**, a compression portion **114**, and retaining element **118**.

[0017] Still referring to **Figs. 1-5**, in a first embodiment, each first and second half nut **14a, 14b** includes opposed first and second axial ends **16a, 16b** and **18a, 18b**, the distance between the axial ends **16a** and **18a**, **16b** and **18b** defining the nut depth **20a, 20b**, respectively. First and second end faces **22a, 22b** and **24a, 24b** extend from the respective interior edge **26a, 26b**, **28a, 28b** to an exterior edge **30a, 30b** and **32a, 32b**, respectively, and from the first axial end **16a, 16b** to the second axial end **18a, 18b**, and parallel to each other. Female threaded semicircular interior surface **34a, 34b** is adapted to engage a selected male thread **T**, the threaded interior surface **34a, 34b** extending from a first thread edge **36a, 36b** proximate the first end face interior edge **26a, 26b** to a second thread edge **38a, 38b** proximate the second end face interior edge **28a, 28b**, and from the first **16a, 16b** to the second **18a, 18b** axial end, and having a thread depth **40a, 40b**. Opposed parallel first and second exterior flats **42a, 42b** and **44a, 44b** are proximate the respective first and second end face exterior edges **22a, 22b** and **24a, 24b**, with the distance between the first and second exterior flats defining the nut width **46a, 46b.** Back wall **48a, 48b** extends between the first and second flats **42a, 42b** and **44a, 44b**, and between the first and second axial ends **16a, 16b** and **18a, 18b.** The maximum distance between opposed points **50a, 50b** on the respective first and second half nut back walls **48a, 48b** when the first and second half nuts **14a, 14b** are fully engaged against a threaded rod **R** defines the nut breadth **52.** First bevel surface **54a, 54b** extends along the intersection **56a, 56b** of the back wall **48a, 48b** and the first axial end **16a, 16b**, defines a half nut first beveled end **58a, 58b** and has a first bevel angle **60a, 60b.** When the first and second half nuts **14a, 14b** enclose a threaded rod **R** having the selected male thread **T** the respective first and second end faces **22a, 22b** and **24a, 24b** of the first and second half nuts **14a, 14b** do not contact each other. This ensures

that they will not interfere with the compression exerted on the half nuts. In the embodiment, each of first and second half nut first and second thread edges **36a**, **36b** and **38a**, **38b**, respectively, is beveled extending from the first axial end **16a**, **16b**, to the second axial end **18a**, **18b**, respectively. Beveling the thread edges, combined with the separation between end faces **22a**, **22b** and **24a**, **24b**, respectively, and the loose engagement – if any – of female threads **34a**, **34b** against threaded rod **R** while inserting, allows the nut assembly **12** to bypass regions of damaged threads – a common occurrence in construction projects that can cause significant delays while effecting repairs. Alternatively, first and second thread edges **36a**, **36b** and **38a**, **38b** may be rounded.

[0018] Still referring to **Figs. 1-6**, in the first embodiment **10** nut housing **70** includes an end wall **72** having opposed exterior and interior surfaces **74** and **76** and a center aperture **78**, the end wall interior surface including a concave tapered portion **80** centered on the center aperture **78** and matching the first bevel angle **60** to receive a half nut beveled end **58a**, **58b**. End wall exterior surface **74** has a flat face. Enclosing sidewalls **82** extending from the end wall **72** to an edge face **84** and have exterior and interior surfaces **86** and **88**, respectively, the edge face **84** parallel to the end wall exterior face **74**. Side wall exterior surfaces **86** are adapted to receive a torque device. In the embodiment, side wall exterior surfaces **86** include six hexagonal flats **90** to receive a conventional flat wrench, but other configurations could be used, for example a square nut, star nut or other configurations. The interior surfaces of the end wall **76** and sidewalls **88** define a cavity **92** to receive first and second half nuts **14a**, **14b**, respectively. Opposed first and second interior flats **94** and **96**, respectively, project into the cavity **92** proximate the end wall tapered portion **80**, each of the first and second interior flats **94** and **96** including an engagement surface **98**, **100**, respectively, and a first lip **102**, **104**, respectively, distal from the nut housing end wall interior surface **76**. The distance between the engagement surfaces defines a slot width **106** not

less than the nut width **46a**, **46b** so as to slidingly engage the half nut exterior flats **42a**, **44a** and **42b**, **44b**, respectively, and the maximum distance **108** from the end wall interior surface **76** to the first shoulder surface **102** or **104** is less than the nut depth **20a**, **20b**. The distance between sidewall interior surfaces **88** across the cavity **92** in the axis parallel to the interior flats **94**, **96** defines a slot length **110** greater than the nut breadth **52** by at least the nut thread depth **40a**, **40b**. This allows the half nuts to fully disengage from threaded rod **R** during downward movement. In the embodiment, side wall interior surface **86** includes a channel **112** circumscribing the surface proximate edge face **84**, the channel **112** to receive a snap ring **116**.

[0019] In the embodiment, bevel edge **60a** & **60b** and tapered portion **80** have a slope in the range 10-15 degrees, and preferably approximately 10 degrees.

[0020] In practice, nut width 46a & 46b will be slightly less than the slot width **106** to permit insertion into the nut housing.

[0021] Referring again to **Figs. 1-6**, in the first embodiment compression portion **114** includes a resilient member **116** disposed within the nut housing cavity **92** to urge the first and second half nuts **14a**, **14b**, respectively, against the end wall interior surface **76**. Retaining element **118** retains the resilient member **116** within the nut housing cavity **92**. In the first embodiment, resilient member **116** is a helical spring, and retaining element **118** is snap ring insertable into channel **112** in combination with second plate **124**.

[0022] Referring again to **Figs. 1-6**, in the first embodiment compression portion **114** includes a first plate **120** having a center aperture **122** and movably disposed between the resilient member **116** and the first and second half nuts **14a** & **14b**, respectively, and a second plate **124** having a center aperture **126** and movably disposed between the resilient member **116** (in the embodiment, a helical spring) and the retaining element **118**. First plate **120** provides more equal distribution of pressure from spring **116** against first and second half

nuts **14a**, **14b** to ensure they remain aligned with each other and against tapered portion **80**. In the embodiment, the outer perimeter edges **128** and **130** of first and second plates **120** and **124**, respectively, approximately match the cross section of cavity **92** and side wall interior surfaces **86**, so that they slide alongside wall interior surfaces **86** without becoming cockeyed. Resilient member **116** could also act directly against half nuts **14a** & **14b** without first plate **120**, in which case the nut depth **20a, 20b** would not necessarily have to be greater than the distance **108** from the end wall interior surface **76** to first shoulder surface **102**, **104**, and still be within the scope of the invention. In the embodiment, first plate **120** provides simple and robust distribution means and bearing surface to isolate the sliding movement of half nuts **14a** & **14b** from resilient member **116**.

[0023] In the first embodiment, each of first and second half nut back walls **48a** & **48b** have an arcuate cross section, and more specifically a partial circular cross section, and nut housing end wall interior surface tapered portion **80** forms a concave frustum centered on aperture **78**. Each of the nut housing first and second interior flats **94** and **96** include an opposed second lip **132** and **134**, respectively, proximate the end wall interior surface **76**, such that the interior flats **94** and **96** partially overhang the nut housing end wall interior tapered portion **80**.

[0024] The arcuate cross section and frustum arrangement provide for more even compression around the perimeter of first and second half nut first beveled ends **58a** & **58b**, respectively, from tapered portion **80**, which is especially useful for high torque scenarios. Additionally, a non-circular cross section for beveled ends **58a** & **58b**, and tapered portion **80**, creates a complex surface which is difficult to machine with precision. In the first embodiment, the Inventor produced a nut housing **70** in a multi-step machining process in order to achieve a circular frustum cross section: first, machining out cavity **92**; second

machining the tapered frustum **80**; third machining channel **112**, and fourth spot welding interior flats **94** and **96** to side wall interior surface **88**.

[0025] Alternatively, first and second half nut back walls may be substantially rectangular in cross section, such that the first beveled surfaces would comprise essentially triangular wedges, with end wall interior surface tapered portion formed into corresponding opposed flat tapered surfaces. However, this flat tapered configuration is very difficult to obtain using machining techniques (in fact requiring special tooling), so would generally be limited to plastic molding (which would limit the strength and temperature properties of the system) or powdered metal forming techniques (which can be relatively expensive). Additionally, the rectangular wedge shape is more susceptible to galling or jamming, and may provide less even compression which reduces resistance to backing out. Unlike conventional bolting systems, the inventor's system may be manufactured from electrically non-conductive and/or chemically resistant materials such as PVC, PTFE, carbon fiber, or similar materials, for example to be used as a seismic restraint for a semiconductor chemical bench in a clean room, but still provide significant strength.

[0026] In the embodiment, resilient member **116** is a helical spring, but other resilient systems such as flat springs, pneumatics, or even opposing magnets could be used depending on size, cost and chemical environment, for instance. The fastener system can be easily scaled up or down for a given application.

[0027] Referring to **Figs. 7-8**, first and second half nuts **1014a** & **1014b** of a second embodiment **1010** are shown. In the embodiment, each of first and second half nut first and second thread edges **1036a** & **1036b** and **1038a** & **1038b**, respectively, are sharp thread-cutting edges extending from the first axial end **1016a** & **1016b**, to the second axial end **1018a** & **1018b**, respectively. The ability to insert thread cutting half nuts **1014a** & **1014b** into a nut housing (not shown) provides the ability to repair damaged threads on a threaded rod if

desirable, similar to a thread die cutter. Unlike a conventional thread die cutter, however, threads **1034a** & **1034b** would only loosely engage the male threads **T** along rod **R** until reaching the damaged thread region, at which point the user may provide counterforce on the nut housing to engage half nuts **1014a** & **1014b** to cut clean threads. In this way, a thread cutting die is not required to engage -- and cut -- the entire length of threaded rod **R**.

[0028] Referring to **Figs. 9-15**, a third embodiment of a fastener system **2010** is shown. A third embodiment **2010** includes a first nut assembly **2012** to couple to a male threaded rod **R**, the first nut assembly **2012** including opposed first and second half nuts **2014a** and **2014b**, a nut housing **2070** to receive the first and second half nuts, a compression portion **2114**, and retaining element **2118**. In the third embodiment each half nut **2014a** and **2014b** includes opposed first and second beveled ends **2058a** & **2066a** and **2058b** & **2066b**, respectively. Providing first and second bevel surfaces allows the first and second half nuts **2014a** and **2014b** to be interchangeable with each other, reducing costs and potential installation errors.

[0029] Still referring to **Figs. 9-15**, in a third embodiment first and second half nut bevel ends **2058a** & **2058b** and **2066a** & **2066b**, respectively, are provided. Each first and second half nut **2014a & 2014b** includes opposed first and second axial ends **2016a** and **2018a**, the distance between the axial ends **2016a** and **2018a** defining the nut depth **2020a**. Each of the first and second end faces **2022a**, **2024a** extend from respective interior edge **2026a**, **2028a** to an exterior edge **2030a**, **2032a**, and from the first axial end **2016a** to the second axial end **2018a**, and parallel to each other. Female threaded semicircular interior surface **2034a** is adapted to engage a selected male thread **T**, the threaded interior surface **2034a** extending from a first thread edge **2036a** proximate the first end face interior edge **2026a** to a second thread edge **2038a** proximate the second end face interior edge **2028a**, and from the first **2016a** to the second **2018a** axial end, and having a thread depth **2040a**.

Opposed parallel first and second exterior flats **2042a** and **2044a** are provided proximate the respective first and second end face exterior edges **2022a** and **2024a**, the distance between the first and second exterior flats defining the nut width **2046a**. Back wall **2048a** extends between the first and second flats **2042a**, **2044a** and between the first and second axial ends **2016a**, **2018a**. The maximum distance between opposed points **2050a** & **2050b** on the respective first and second half nut back walls **2048a** & **2048b** when the first and second half nuts **2014a** & **2014b** are fully engaged against a threaded rod **R** defines the nut breadth **2052**. First bevel surface **2054a** extends along the intersection **2056a** of the back wall **2048a** and the first axial end **2016a**, defining a half nut first beveled end **2058a** and having a first bevel angle **2060a**. Each of the first and second half nuts **2014a** & **2014b** includes a second bevel surface **2062a** & **2062b** extending along the intersection **2064a** & **2064b** of the back wall **2048a** & **2048b** and the second axial end **2018a** & **2018b**, respectively, defining a half nut second beveled end **2066a** & **2066b**, respectively, and having a second bevel angle **2068a** & **2068b** matching the first bevel angle **2060a** & **2060b**. wherein, when the first and second half nuts **2014a** & **2014b** enclose a threaded rod **R** having the selected male thread **T** the respective first and second end faces **2022a** & **2022b** and **2024a** & **2024b** of the first and second half nuts **2014a** & **2014b** do not contact each other.

[0030] In the third embodiment, each of first and second half nut first and second thread edges **2036a** & **2036b** and **2038a** & **2038b**, respectively, is beveled extending from the first axial end **2016a** & **2016b**, to the second axial end **2018a** & **2018b**, respectively. Beveling the thread edges, combined with the separation between end faces **2022a** & **2022b** and **2024a** & **2024b**, respectively, and the loose engagement – if any – of female threads **2034a** & **2034b** against threaded rod **R** while inserting, allows the nut assembly **2012** to bypass regions of damaged threads – a common occurrence in construction projects that can cause

significant delays while effecting repairs. Alternatively, first and second thread edges **2036a** & **2036b** and **2038a** & **2038b** may be rounded.

[0031] Still referring to **Figs. 9-15**, in a third embodiment **2010** nut housing **2070** includes an end wall **2072** having opposed exterior and interior surfaces **2074** and **2076** and a center aperture **2078**, the end wall interior surface including a concave tapered portion **2080** centered on the center aperture **2078** and matching the first bevel angle **2060** to receive a half nut beveled end **2058a** & **2058b**. End wall exterior surface **2074** provides a flat face for mating against a flat surface. Enclosing sidewalls **2082** extend from the end wall **2072** to an edge face **2084** and have exterior and interior surfaces **2086** and **2088**, respectively, the edge face **2084** parallel to the end wall exterior face **2074**, and the side wall exterior surfaces **2086** adapted to receive a torque device. In the embodiment, side wall exterior surfaces **2086** include six hexagonal flats **2090** to receive a conventional flat wrench, but other configurations could be used. The interior surfaces of the end wall **2076** and sidewalls **2088** define a cavity **2092** to receive first and second half nuts **2014a & 2014b**, respectively. Opposed first and second interior flats **2094** and **2096**, respectively, project into the cavity **2092** proximate the end wall tapered portion **2080**, each of the first and second interior flats **2094** and **2096** including an engagement surface **2098** and **2100**, respectively, and a first lip **2102** and 2**104**, respectively, distal from the nut housing end wall interior surface **2076.** The distance between the engagement surfaces defines a slot width **2106** not less than the nut width **2046a** &**2046b** so as to slidingly engage the half nut exterior flats **2042a** & **2044a** and **2042b** & **2044b**, respectively, and the maximum distance 2**108** from the end wall interior surface **2076** to the first shoulder surface **2102** or **2104** is less than the nut depth **2020a** & **2020b**. The distance between sidewall interior surfaces **2088** across the cavity **2092** in the axis parallel to the interior flats **2094** & **2096** defines a slot length **2110** greater than the nut breadth **2052** by at least the nut thread depth **2040a** & **2040b**. In the embodiment, side wall

interior surface **2086** includes a channel **2112** circumscribing the surface proximate edge face **2084**, the channel **2112** to receive a retaining clamp **2116**.

[0032] Referring again to **Figs. 9-15**, in the third embodiment compression portion **2114** includes a resilient member **2116** disposed within the nut housing cavity **2092** to urge the first and second half nuts **2014a** & **2014b**, respectively, against the end wall interior surface **2076**, and retaining element **2118** to retain the resilient member **2116** within the nut housing cavity **2092**. In the first embodiment, resilient member **2116** is a helical spring, and retaining element **2118** is "snap ring" insertable into channel **2112** in combination with second plate **2124**.

[0033] Referring again to **Figs. 9-15**, in a third embodiment compression portion **2114** includes a first plate **2120** having a center aperture **2122** and movably disposed between the resilient member **2116** and the first and second half nuts **2014a** & **2014b**, respectively, and a second plate **2124** having a center aperture **2126** and movably disposed between the resilient member **2116** and the retaining element **2118**. First plate **2120** provides more equal distribution of pressure from spring **2116** against first and second half nuts **2014a** & **2014b** to ensure they remain aligned with each other and against tapered portion **2080**. In the embodiment, the outer perimeter edges **2128** and **2130** of first and second plates **2120** and **2124**, respectively, approximately match the cross section of cavity **2092** and side wall interior surfaces **2086**, so that they slide alongside wall interior surfaces **2086** without becoming cockeyed.

[0034] In the third embodiment, each of first and second half nut back walls **2048a** & **2048b** have an arcuate cross section, and more specifically a partial circular cross section, and nut housing end wall interior surface tapered portion **2080** forms a concave frustum centered on aperture **2078**. Each of the nut housing first and second interior flats **2094** and **2096** include an opposed second lip **2132** and **2134**, respectively, proximate the end wall

interior surface **2076**, such that the interior flats **2094** and **2096** partially overhang the nut housing end wall interior tapered portion **2080**.

[0035] Referring to **Figs. 9-15**, and particularly to **Figs. 14-15**, the operation of the system is demonstrated. Nut housing end wall exterior surface **2074** faces the surface to be coupled. When nut assembly **2012** is inserted over a threaded rod **R**, as shown in **Fig. 15**, half nuts **2014a** & **2014b** are loose within cavity **2092** and will slide apart along the slot length **2110**, allowing assembly **2012** to slide down **R** easily. Female threads **2034** may loosely engage the male threads on rod **R**. Assembly **2012** is moved down rod **R** until it is abutting the member to be coupled, designated **B**, which is connected within the structure by other standard means, such as nails, screws, brackets, etc. With assembly **2012** pressed tightly against **B**, as shown in **Fig. 14**, the user may rotate nut housing **2070** slightly to ensure half nuts **2014a** & **2014b** slip into engagement with threaded rod **R**. Resilient member **2116** will press half nuts **2014a** & **2014b** into light engagement by pressing beveled ends **2058a** & **2058b** against tapered surface **2080**. At this point the system **2010** is set. If an external force pushes member **B** upwards or pulls rod **R** downward (such as during high winds or a seismic event), then half nuts **2014a** & **2014b** will be driven inwards against threaded rod **R** to prevent movement, thereby preventing member **B** from lifting, as shown in **Fig. 14**. If member **B** shrinks over time, nut housing **2070** will slide downward, loosening the engagement of half nuts **2014a** & **2014b**, and resilient member **2116** will urge them down rod **R**. The process of shrinkage and nut movement is slow, but over time will ensure the fastener system remains effective for its purpose to prevent upward displacement of member **B**.

[0036] Referring to **Figs. 16-17**, a fourth embodiment **3010** is shown, including a plurality of half nut sets **3014a&b**, **3014c&d**, and **3014e&f**, each similar to the third embodiment described above. In the embodiment, each half nut set **3014ab**, **3014cd** & **3014ef** includes a different female thread size corresponding to a selected male thread size,

but all have approximately the same nut width **3046**, nut breadth **3052** (half nuts shown separated, rather than engaged to a male thread), and nut depth **3020**, such that nut housing **3070** is usable with any of the sets. This interchangeability of the system design provides substantial advantages in that the nut housing **3070** is significantly more expensive and heavier than the respective half nuts **3014**, so relatively fewer nut housings **3070** (as well as first and second plates **3120** and **3124**, resilient members **3116**, and retaining element **3118**) may be stocked and transported in proportion to half nut sets to support a given range of threaded rod sizes. In the fourth embodiment, each of the opposed first and second half nuts **3014a** & **3014b**, **3014c** & **3014d**, and **3014e** & **3014f**, for a selected male thread size **R** defines a set **3014**. The system **3010** includes a single nut housing **3070** and a plurality of sets **3014**, each set for a different selected male thread size **R**. All of the sets **3014** have the same nut width **3046** to engage the nut housing slot width **3106** and a nut breadth **3052** compatible with the nut housing slot length **3110**. In this regard, "compatible with" refers to the slot length **3110** being greater than the nut breadth **3052** by at least the magnitude of the thread depth. The half nut sets **3014** could have identical nut breadths **3052**, or variable nut breadths **3052**, so long as the nut housing **3070** provides sufficient space for the set **3014ab**, **3014cd** or **3014ef** with the greatest breadth **3052** to slide apart and fully disengage the male threads. In the fourth embodiment, the nut breadths **3052** are identical and the slot length **3110** is sufficient to accommodate the largest thread size of the plurality of sets **3014ab**, **3014cd** or **3014ef**.

[0037] Referring to **Figs. 18-19**, a fifth embodiment is shown, which is in essence two nut assemblies **4012** and **5012**, similar to the assemblies described in the third embodiment, stacked with an interlineal compression member **4132** between them. A second nut assembly **5012** is provided to couple to the male threaded rod **R** having the second nut assembly nut housing end wall exterior surface **5074** oriented against the first nut assembly

nut housing edge face **4084**, and an interlineal compression member **4132** disposed between the first and second nut assemblies **4012** and **5012**. Interlineal compression member **4132** has a first end **4134** engaged against the first nut assembly second plate **4124**, and a second end **4136** engaged against the second nut assembly end wall exterior face **5074**. In the embodiment, the interlineal compression element **4132** is a helical spring. In the embodiment, first and second interlineal plates **4138** and **4140** are provided to distribute pressure and provide bearing surfaces. A washer **4142** is disposed between first nut assembly **4012** and base plate **B**. In this way, the second nut assembly **5012** back-stops the first **4012**, and the interlineal compression member **4132** provides constant additional pressure to drive the half nuts (not visible) against first nut assembly end wall interior surface tapered portion, such that as the coupled surface **B** pulls away – for example, the base plate of a house frame wall section shrinking – the first nut assembly **4012** half nuts will actually work downwards on the threaded rod **R** to self-tighten against the coupled surface **B**. Therefore, seismic and hurricane hold downs in wood frame built structures will not work loose over time.

[0038] Referring to **Figs. 20-21**, a sixth embodiment **6010** is shown including a nut assembly **2012** as described in the third embodiment in combination with a vertical hold down bracket **6012**. In the embodiment, a vertical hold down **6012** includes bottom and top brackets, **6014** and **6016**, respectively. Bottom bracket **6014** includes a first flange **6018** having a first oversized aperture **6020** to receive a male threaded rod **R** and a second flange **6022** extending from the first flange **6018** at an angle normal to the first flange **6018**. Top bracket **6016** includes a first flange **6024** having a second oversized aperture **6026** to receive male threaded rod **R** and a second flange **6028** extending from the first flange **6024** at an angle normal to the first flange **6024**. Bottom bracket first flange **6018** inserts over a threaded rod **R** through the first oversized aperture **6020** against a horizontal member **B**, and the

bottom bracket second flange **6022** goes against a vertical member **S** to be coupled to the horizontal member **B**. Nut assembly **2012** inserts over the threaded rod **R** and against the bottom bracket first flange **6018** with the end wall exterior surface **2074** against the first flange. Top bracket **6016** inserts over the threaded rod **R** to press the top bracket first flange **6024** tightly against the nut assembly nut housing edge face **2084** and the top bracket second flange **6028** against the bottom bracket second flange **6022** (and vertical member **S**). A plurality of fasteners **6030** couples to the vertical member **S** through the top and bottom bracket second flanges **6022** and **6028**, respectively. In this regard, "oversized" means an opening greater than the cross section of the anticipated range of threaded rods, such that the brackets may be adjusted to butt against the vertical member. With this system, nut assembly **2012** provides reliable long term hurricane and seismic connections regardless of the amount of wood shrinkage and flexing during the life of the structure. Any lifting or bending by vertical member **S** relative to horizontal member **B** will push up against nut assembly **2012**, causing the half nuts (not shown) to clamp more tightly against threaded rod **R**, and preventing movement. As frame members shrink, nut housing **2070** will slide down threaded rod **R** slightly, thereby reducing engagement of the half nuts against threaded rod **R**, and the half nuts will work down the rod under pressure from the internal resilient member **2116** (not shown in this view).

[0039] Referring to **Figs. 22-40**, a seventh embodiment **7010**, adapted for repairing damaged threads, is shown. The seventh embodiment includes a nut assembly **7012** to engage male threaded rod **R** nut housing **7070** to receive first and second half nuts **7014a & b**, a compression portion **7114**, and a retaining element **7118**.

[0040] Still referring to **Figs. 22-40** in the seventh embodiment, each first and second half nut 7014**a**, **7014b** is asymmetrical and identical to each other. Therefore, a single half nut **7014** will be described in detail. Each half nut **7014** includes opposed first and second

axial ends **7016** and **7018**, the distance between the axial ends **7016** and **7018** defining the nut depth **7020**. First and second end faces **7022** and **7024** extend from the respective interior edge **7026** and **7028** to an exterior edge **7030** and **7032**, respectively, and from the first axial end **7016** to the second axial end **7018**, and parallel to each other.

[0041] Female threaded interior surfaces **7034** include interrupted female thread sections **7144** and **7146**, adapted to engage a selected male thread **T**, and having thread depth **7040**. In the embodiment, each interior surface **7034** includes first and second interrupted thread sections **7144**, **and 7146**, respectively. Each first interrupted thread section **7144** extends from a first thread edge **7148**, to a second thread edge **7150**. Each second interrupted thread section **7146** extends from a third thread edge **7152** to a fourth thread edge **7154**. Interrupted thread edges **7148**, **7150**, **7152** and **7154** form sharp cutting edges in order to cut through and repair damaged male threads on a threaded rod **R**. Interrupted thread sections **7144** and **7146** are provided in order to provide additional cutting edges and for positive engagement around intermittent damaged regions of male threaded rod **R**. Additionally, the gaps between interrupted thread sections **7144** and **7146** provide space for shavings to displace during thread cutting. Female threaded portion **7036** may be tapered to ensure maximum pressure only on a narrow band of male threads, or may be straight.

[0042] Each half nut **7014** includes a first full exterior flat **7042** and an opposing second partial exterior flat **7044** disposed proximate the first and second end face exterior edges **7022** and **7024**, respectively, with the distance between the first and second exterior flats defining the nut width **7046**. First back wall **7048** extends between the first and second exterior flats **7042** and **7044**. In the embodiment, first back wall **7048** traces a constant-radius curve between first and second exterior flats **7042** and **7044**. Second back wall **7156** is displaced inwardly from first sidewall **7048**, tracing a constant radius curve from proximate

second face **7024** exterior edge **7032** to a first edge **7160** of a partial third flat **7158**, creating shoulder **7164** to engage second lips **7178** or **7180** of nut housing **7070**. In the embodiment, second back wall **7156** blends into third flat **7158** at first edge **7160** to form a continuous smooth surface without a sharp edge, to facilitate rotation within nut housing **7070**, as discussed below. Third flat **7158** is a partial flat, extending axially from second axial end **7018** to shoulder **7164**, and circumferentially from first edge **7160** to a second edge **7162**. The distance between third flats **7158a** and **7158b** of first and second half nuts **7014a** and **7014b** when engaged around threaded rod **R** is equal to the nut width **7046**. First back wall **7048** extends full breadth from proximate first axial end **7016** to proximate second axial end **7018**.

[0043] Referring to **Fig. 27**, the maximum distance between opposed points **7050a** and **7050b** on the respective first and second half nut first back walls **7048a and 7048b** when the first and second half nuts **7014a**, **7014b** are fully engaged against a threaded rod **R** defines the nut breadth **7052**. First bevel surface **7054a**, **7054b** extends along the intersection of the back wall **7048a**, **7048b** and the first axial end **7016a**, **7016b**, defining a half nut first beveled end **7058a**, **7058b** and having a first bevel angle **7060a**, **7060b**. When the first and second half nuts **7014a**, **7014b** enclose a threaded rod **R** having the selected male thread **T** the respective first and second end faces **7022a**, **7022b** and **7024a**, **7024b** of the first and second half nuts **7014a**, **7014b** do not contact each other. This ensures that they will not interfere with the compression exerted on the half nuts.

[0044] Still referring to **Figs. 22-40**, in the seventh embodiment **7010** nut housing **7070** includes an end wall **7072** having opposed exterior and interior surfaces **7074** and **7076** and a center aperture **7078**, the end wall interior surface including a concave tapered portion **7080** centered on the center aperture **7078** and matching the first bevel angle **7060** to receive a half nut beveled end **7058**. End wall exterior surface **7074** has a flat face. Enclosing

sidewalls **7082** extending from the end wall **7072** to an edge face **7084** and have exterior and interior surfaces **7086** and **7088**, respectively, the edge face **7084** parallel to the end wall exterior face **7074**. Side wall exterior surfaces **7086** are adapted to receive a torque device. In the embodiment, nut housing 7010 is configured similar to the previously described nut housings, with side wall exterior surfaces **7086** include six hexagonal flats **7090** to receive a conventional flat wrench, but other configurations could be used, for example a square nut, star nut or other configurations. The interior surfaces of the end wall **7076** and sidewalls **7088** define a cavity **7092** to receive first and second half nuts **7014a, 7014b**, respectively. Opposed first and second interior flats **7094** and **7096**, respectively, project into the cavity **7092** proximate the end wall tapered portion **7080**, each of the first and second interior flats **7094** and **7096** including a flat engagement surface **7098**, **7100**, respectively, and a first shoulder surface **7102**, **7104**, respectively, distal from the nut housing end wall interior surface **7076**. The distance between the flat engagement surfaces defines a slot width **7106** not less than the nut width **7046a**, **7046b** so as to slidingly engage the half nut first and second exterior flats **7042a/b and 7044a/b**, respectively, or the third exterior flats **7158a** and **7158b**, and the maximum distance **7108** from the end wall interior surface **7076** to the first shoulder surface **7102** or **7104** is less than the nut depth **7020**.

[0045] Opposed first and second semi-circular engagement surfaces **7166** and **7168** are recessed under first and second interior flats **7094** and **7096**, respectively, creating a second lip **7178** and **7180** opposing first shoulder surface **7102**, **7104**, respectively. First semi-circular engagement surface **7166** extends from a first edge **7170** to a second edge **7172**, and second semi-circular engagement surface **7168** extends from a first edge **7174** to a second edge **7176**. In the embodiment, each semi-circular engagement surface **7166**, **7168** is concave and open to cavity **7092**, having a constant radius of curvature less than that of sidewall interior surface **7088**, and equal to that of first sidewall **7048**. First and second flat

engagement surfaces **7098** and **7100** extend around the edges **7170**, **7172** and **7174**, **7176** of semi-circular engagement surfaces **7166** and **7168**, respectively, to form flat extensions **7182**, **7184** and **7186**, **7188**, respectively. The height of first and second semi-circular engagement surfaces **7166** and **7168** is approximately equal to the height of half nut projecting shoulder **7164** to receive the projection portion therein.

[0046] The distance between sidewall interior surfaces **7088** across the cavity **7092** in the axis parallel to the interior flats **7094**, **7096** defines a slot length **7110** greater than the nut breadth **7052**. This allows the half nuts to disengage from threaded rod **R** during downward movement. In the embodiment, slot length **7110** is greater than nut breadth **7052** by at least twice the thread depth **7040** in order to allow half nuts **7014a**, **7014b** to fully disengage threaded rod **R**. In the embodiment, side wall interior surface **7086** includes a channel **7112** circumscribing the surface proximate edge face **7084**, the channel **7112** to receive a snap ring **7118**.

[0047] In the embodiment, bevel edge **7060a** & **7060b** and tapered portion **7080** have a slope in the range 10-15 degrees, and preferably approximately 10 degrees.

[0048] In practice, nut width **7046a** & **7046b** will be slightly less than the slot width **7106** to permit insertion into the nut housing.

[0049] Referring again to **Fig. 22**, in the seventh embodiment compression portion **7114** includes a resilient member **7116** disposed within the nut housing cavity **7092** to urge the first and second half nuts **7014a**, **7014b**, respectively, against the end wall interior surface **7076**. Retaining element **7118** retains the resilient member **7116** within the nut housing cavity **7092**. In the seventh embodiment, resilient member **7116** is a helical spring, and retaining element **7118** is snap ring insertable into channel **7112** in combination with second plate **7124**.

[0050] Referring again to **Figs. 22**, in the first embodiment compression portion **7114** includes a first plate **7120** having a center aperture **7122** and movably disposed between the resilient member **7116** and the first and second half nuts **7014a** & **7014b**, respectively, and a second plate **7124** having a center aperture **7126** and movably disposed between the resilient member **7116** and the retaining element **7118**. First plate **7120** provides more equal distribution of pressure from spring **7116** against first and second half nuts **7014a**, **7014b** to ensure they remain aligned with each other and against tapered portion **7080**. In the embodiment, the outer perimeter edges **7128** and **7130** of first and second plates **7120** and **7124**, respectively, approximately match the cross section of cavity **7092** and side wall interior surfaces **7088**, so that they slide alongside wall interior surfaces **7088** without becoming cockeyed.

[0051] In the seventh embodiment, each of first and second half nut first back walls **7048a** & **7048b** have an arcuate cross section, and more specifically a partial circular cross section, and nut housing end wall interior surface tapered portion **7080** forms a concave frustum centered on aperture **7078**.

[0052] The arcuate cross section and frustum arrangement provide for more even compression around the perimeter of first and second half nut first beveled ends **7058a** & **7058b**, respectively, from tapered portion **7080**, which is especially useful for high torque scenarios, such as thread repair cutting. Additionally, a non-circular cross section for beveled ends **7058a** & **7058b**, and tapered portion **7080**, creates a complex surface which is difficult to machine with precision.

[0053] Alternatively, first and second half nut back walls may be substantially rectangular in cross section, such that the first beveled surfaces would comprise essentially triangular wedges, with end wall interior surface tapered portion formed into corresponding opposed flat tapered surfaces.

[0054] In the embodiment, resilient member **7116** is a helical spring, but other resilient systems such as flat springs, pneumatics, or opposing magnets could be used depending on size, cost and chemical environment, for instance. The fastener system can be easily scaled up or down for a given application.

[0055] In operation, the seventh embodiment provides an ability to cut and/or repair threads along a male threaded rod **R**, operating similarly to the embodiments described previously, and may be used as a common system. First and second half nuts **7014a/b** are inserted into nut housing **7070**, with beveled edges **7054a/b** oriented against tapered interior surface **7080**, and opposed first and second exterior flats **7042a/b** and **7044a/b** aligned against flat engagement surfaces **7098** and **7100**. Compression portion **7114**, including first and second plates **7120** and **7124** with resilient spring **7116** disposed between are inserted and retaining element **7118** installed. First and second half nuts **7014a/b** are identical, rather than mirror images, so when inserted into nut housing **7070** the first half nut **7014a** first end face **7022a** will abut second half nut **7014b** second end face **7024b**, and first half nut **7014a** second end face **7024a** will abut second half nut first end face **7022b**. Similarly, first half nut **7014a** first flat **7042a** will be proximate second half nut **7014b** second flat **7044b**, and first half nut **7014a** second flat **7044a** will be proximate second half nut **7014b** first flat **7042b**. Opposed first and second half nuts **7014a** and **7014b** slide apart within cavity **7092** along slot length **7110** as the assembly **7012** is inserted over and along the length of rod **R** to a location slightly beyond a damaged thread region. At this point assembly **7012** is pulled upward to drive tapered surface **7080** against beveled edges **7054a/b** which forces half nuts **7014a/b** together to compress interrupted thread portions **7144a/b** and **7146a/b** against threaded rod **R** to engage the male threads. When interrupted thread portions are engaged, the operator rotates assembly **7012** in the direction to loosen the nut assembly (which is conventionally counterclockwise), which causes nut housing **7070** to rotate in relation to first and second half

nuts **7014a/b** until first sidewalls **7048a/b** with projecting shoulders **7164a/b** are engaged against semi-circular engagement surfaces **7166** and **7168**, respectively, and nut housing lower lips **7178** and **7180**, respectively. First and second half nut third flats **7158a/b** will then be engaged against nut housing interior flat engagement surfaces **7098** and **7100**, respectively, and first and second half nuts **7014a/b** will be locked in place in maximum compression, so that high torque may be applied to cut into damaged threads in order to repair them. As assembly **7012** rotates (with half nuts **7014a/b** locked in place and highly compressed against threaded rod **R**), interrupted thread edges **7148** and **7152** will cut through and/or reform material to clear and repair damaged threads, or form new threads. When thread repair operations are complete, assembly **7012** may be counter-rotated to disengage projecting shoulders **7164a/b**, allowing half nuts **7014a/b** to slide apart slightly and loosen so they can be removed without cutting the entire thread length of threaded rod **R**.

[0056] Referring to **Fig. 36**, a tool **7180** is provided which is useful with the seventh embodiment for engaging or disengaging the half nuts **7014a/b** into semi-circular engagement surfaces **7166** and **7168**. Tool **7180** includes a handle **7182** and a flat bar **7184** projecting from handle **7182**, the flat bar **7184** extending widthwise from a first edge **7186** to an opposed second edge **7188** defining a tool width. In the embodiment, the tool width is approximately equal to the distance between opposed points along first and second half nut **7014a/b** interior surfaces, between the interrupted thread portions **7144** and **7146** such that tool **7180** may be inserted in-between the half nuts and to engage against the thread edges an rotate the half nuts to pre-engage the semi-circular depressions **7166** and **7168**. Curved inset **7190** is provided to allow insertion around a threaded rod **R**.

[0057] Referring to **Fig. 41**, a pair of half nuts **8014a** and **8014b** of an eighth embodiment is shown, generally similar to the first embodiment but including interrupted

female thread portions **8044a/b** and **8046a/b**, each of the interrupted female thread portions having a cutting edge.

[0058] The seventh embodiment adapted to repair damaged threads, although described separately, may be combined with the other embodiments adapted as fasteners. A set of first and second half nuts having thread cutting edges, **7014a&b** or **8014a&b** may be interchangeable with half nut sets **14a&b**, **1014a&b**, **2014a&b**, **3014a-f**, etc. For instance, referring to **Figs. 16** and **17** demonstrating use of a common nut housing with a plurality of sets of half nuts **3014a,b**, **3014c,d** and **3014e,f** adapted for different thread sizes, the plurality of sets may include one or more sets of half nuts having thread cutting edges **7014a,b** adapted for use in the same nut housing **3070**. If damaged or galled threads are encountered while applying one of the fastener sets **3014a-f**, the apparatus may be disassembled in place, the half nut set **3014** removed and a half nut set **7014a,b** for the required thread size having a cutting edge inserted into the nut housing **3070** with the first and second plates, compression member and retaining element reassembled in place below the damaged area. As the assembly is rotated in the "un-threading" direction, the cutting edges will be compressed against the male threads removing burrs and/or realigning thread ridges as they move along the male threaded member. When the damaged thread portion is repaired, the cutting edge half nuts **7014a,b** may be swapped in place with the appropriate fastener half nut set **3014a-f**, and the fastener system torqued into place. The flexibility to exchange compression half nut sets with cutting edge half nut sets in-place, and back again, provides significant savings in time and material at the job site. Additionally, all of this may be accomplished using a common nut housing for a variety of male thread sizes, thereby markedly decreasing the number of parts required for inventory, and reducing time lost to mistakes in selecting the wrong part size.

[0059] Referring to **Figs. 42-47** a ninth embodiment **9010** is shown, similar to the first described embodiment, including a first nut assembly **9012** to couple to a male threaded rod **R**, the first nut assembly **9012** including opposed first and second half nuts **9014a** and **9014b**, a nut housing **9070** to receive the first and second half nuts **9014a & b**, a compression portion **9114**, and retaining element **9118**. Referring to **Figs. 42, 43 & 44**, compression portion **9114** comprises a resilient wave spring having a first a first end **9120** forming a plate to engage against first and second half nuts **9114a&b**, and a second plate **9124** to engage against retaining element **9118**. Wave spring **9114** is formed from a flat coil, such that first and second plates **9120** and **9124**, respectively, are integral with the spring itself. Wave spring **9114** provides high compression force in a relatively compact form, and obviates the need for separate plates and resilient members, permitting a more compact nut housing **9070**.

[0060] Referring to **Figs. 42, 43, 45 & 46**, retaining element **9118** comprises a flat helical spring having two or three turns, which allows it to be compressed circumferentially to insert into nut housing **9070** and compressed axially to fit into channel **9112**, and retained in place by friction when the compression is released. The nut assembly **9012** can therefore be assembled and disassembled without need for tools (such as a snap ring puller, as required for the first described embodiment).

[0061] Referring to **Figs. 42, 43** and **47** the configuration includes a second nut assembly **10012** which is identical to the first nut assembly **9012**, including a nut housing **10070** to receive first and second opposed half nuts **10014a&b**, compression portion **10114**, and retaining element **10118**. Interlineal compression member **9132 is** disposed between the first and second nut assemblies **9012** and **10012**. Interlineal compression member **9132** has a first end **9134** engaged against a first interlineal plate **9138**, and a second end **9136**

engaged against second interlineal compression plate **9140**. In the embodiment, the interlineal compression element **9132** is a helical spring.

[0062] In the horizontal configuration shown in **Figs. 42** and **43**, first and second interlineal compression plates **9138** and **9140** abut directly against the respective first and second nut housing end wall exterior faces **9074** and **10074**. This opposing orientation may be especially useful for horizontally mounted fasteners, to prevent vibration and cyclic forces from loosening the fasteners over time. Additionally, this configuration may be useful with first and second nut assemblies **9012** and **10012** tightened against opposing surfaces of a plate or board, with interlineal compression member **9132** extending through an aperture in the plate or board.

[0063] In the vertically stacked configuration shown in **Fig. 47**, similar to the configuration shown in **Figs. 18 & 19**, the second nut assembly acts as a keeper to prevent first nut assembly **9012** from working loose over time. Interlineal compression element **9132** maintains pressure on second nut assembly **10012** to maintain half nuts **10014a&b** fully engaged, and provide some level of shock absorption.

[0064] Those skilled in the art will recognize that numerous modifications and changes may be made to the preferred embodiment without departing from the scope of the claimed invention. It will, of course, be understood that modifications of the invention, in its various aspects, will be apparent to those skilled in the art, some being apparent only after study, others being matters of routine mechanical, chemical and electronic design. No single feature, function or property of the preferred embodiment is essential. Other embodiments are possible, their specific designs depending upon the particular application. As such, the scope of the invention should not be limited by the particular embodiments herein described but should be defined only by the appended claims and equivalents thereof.

CLAIMS

I claim:

1. A fastener system, comprising a first nut assembly to engage a male threaded rod, the first nut assembly including opposed first and second half nuts, a nut housing to receive the first and second half nuts, a compression portion, and a retaining element;

each first and second half nut comprising:

opposed first and second axial ends, the distance between the axial ends defining the nut depth;

first and second end faces, each of the first and second end faces extending from an interior edge to an exterior edge and from the first to the second axial ends, and parallel to each other;

a female threaded semicircular interior surface adapted to engage a selected male thread, the threaded interior surface extending from a first thread edge proximate the first end face interior edge to a second thread edge proximate the second end face interior edge, and from the first to the second axial end, and having a selected thread depth;

opposed parallel first and second exterior flats proximate the respective first and second end face exterior edges, the distance between the first and second exterior flats defining the nut width;

a back wall extending between the first and second flats and between the first and second axial ends, the maximum distance between opposed points on the respective first and second half nut back walls when the first and second half nuts are fully engaged against the threaded rod defining the nut breadth; and,

a first bevel surface extending along the intersection of the back wall and the first axial end, defining a half nut first beveled end and having a first bevel angle;

wherein, when the first and second half nuts engages the threaded rod, the respective first and second end faces of the first and second half nuts do not contact each other;

the nut housing comprising:

an end wall having exterior and interior surfaces and a center aperture, the end wall interior surface including a concave tapered portion centered on the center aperture and matching the first bevel angle to receive a half nut beveled end, the end wall exterior surface having a flat face;

enclosing sidewalls extending from the end wall to an edge face and having exterior and interior surfaces, the edge face parallel to the end wall exterior face, the side wall exterior surfaces adapted to receive a torque device, the interior surfaces of the end wall and sidewalls defining a cavity; and,

opposed first and second interior flats projecting into the cavity proximate the end wall interior surface, each of the first and second interior flats including an engagement surface and a first lip distal from the nut housing end wall interior surface, the distance between the engagement surfaces defining a slot width not less than the nut width so as to slidingly engage the half nut exterior flats;

wherein, the distance between sidewall interior surfaces across the cavity in the axis parallel to the interior flats defines a slot length greater than the nut breadth by at least the nut thread depth; and,

the compression portion comprising a resilient member disposed within the nut housing cavity to urge the first and second half nuts against the end wall interior surface.

2. A fastener system as in claim 1, each of the first and second half nuts further comprising:

a second bevel surface extending along the intersection of the back wall and the second axial end, defining a half nut second beveled end and having a second bevel angle matching the first bevel angle.

3. A fastener system as in claims 1 or 2, further comprising:

the compression portion further comprising a first plate having a center aperture, the first plate movably disposed between the resilient member and the first and second half nuts.

4. A fastener system as in claim 3, further comprising:

the compression portion further comprising a second plate having a center aperture, the second plate movably disposed between the resilient member and the retaining element.

5. A fastener system as in claim 3, further comprising:

the resilient member comprising a helical spring.

6. A fastener system as in claim 4, further comprising:

the resilient member comprising a helical spring.

7. A fastener system as in claims 1 or 2, further comprising:

wherein each of the first and second half nut back walls comprises an arcuate cross section; and,

the nut housing end wall interior surface tapered portion forms a concave frustum centered on the aperture.

8. A fastener system as in claim 7, further comprising:

wherein, the first and second half nut arcuate cross sections are semi-circular;

wherein the nut housing end wall frustum comprises a circular cross section; and,

each of the nut housing first and second interior flats further including an opposed second lip proximate the end wall interior surface, such that the interior flats partially overhang the nut housing end wall interior tapered portion frustum.

9. A fastener system as in claims 1 or 2, further comprising:

wherein each first and second half nut first and second thread edge includes a bevel extending from the first to the second axial end.

10. A fastener system as in claims 1 or 2, further comprising:

wherein each first and second half nut first and second thread edge comprises a thread-cutting edge extending from the first to the second axial end.

11. A fastener system as in claims 1 or 2, further comprising:

wherein each first and second half nut first and second thread edge comprises a rounded edge extending from the first to the second axial end.

12. A fastener system as in claims 1 or 2, further comprising:

a plurality of sets, each set including opposed first and second half nuts for a selected male thread size, each set for a different selected male thread size, wherein

all of the sets have the same nut width to engage the nut housing slot width and a nut breadth compatible with the nut housing slot length.

13. A fastener system as in claims 1 or 2, further comprising:

a plurality of sets, each set including opposed first and second half nuts for a selected male thread size, each set for a different selected male thread size, wherein all of the sets have equal nut widths to engage the nut housing slot width and equal nut breadths, the breadth compatible with the nut housing slot length.

14. A fastener system as in claim 4, further comprising:

a second nut assembly to couple to the male threaded rod having the second nut assembly nut housing end wall exterior surface oriented against the first nut assembly nut housing edge face; and,

an interlineal compression member disposed between the first and second nut assemblies, the interlineal compression member having a first end engaged against the first nut assembly, and a second end engaged against the second nut assembly.

15. A fastener system as in claim 6, further comprising:

a second nut assembly to couple to the male threaded rod having the second nut assembly nut housing end wall exterior surface oriented against the first nut assembly nut housing edge face; and,

an interlineal compression member disposed between the first and second nut assemblies, the interlineal compression member having a first end engaged against the first nut assembly, and a second end engaged against the second nut assembly.

16. A fastener system as in claim 14, further comprising:

wherein the interlineal compression member comprises a helical spring.

17. A fastener system as in claim 15, further comprising:

wherein the interlineal compression member comprises a helical spring.

18. A fastener system as in claims 1 or 2, further comprising:

a vertical hold down including bottom and top brackets,

the bottom bracket comprising a first flange having a first oversized aperture to receive a male threaded rod and a second flange extending from the first flange at an angle normal to the first flange,

the top bracket comprising a first flange having a second oversized aperture to receive a male threaded rod and a second flange extending from the first flange at an angle normal to the first flange; and,

a plurality of fasteners;

the bottom bracket first flange insertable over a threaded rod through the first oversized aperture against a horizontal member, and the bottom bracket second flange to go against a vertical member to be coupled to the horizontal member, the nut assembly to insert over the threaded rod and against the bottom bracket first flange with the end wall exterior surface against the first flange, the top bracket to insert over the threaded rod to press the top bracket first flange tightly against the nut assembly nut housing edge face and the top bracket second flange against the bottom bracket second flange, and the plurality of fasteners to couple to the vertical member through the top and bottom bracket second flanges.

19. A fastener system as in claims 1 or 2, further comprising:

a saddle having an oversize center aperture to insert over a nut assembly on a threaded rod against a flat member.

20. A fastener system as in claims 1 or 2, each female threaded semicircular interior surface further comprising a plurality of threaded portions, each threaded portion including a thread cutting edge.

21. A fastener system, comprising a nut assembly to engage a male threaded rod, the nut assembly including opposed first and second half nuts, a nut housing to receive the first and second half nuts, a compression portion, and compression portion retaining element;

each first and second half nut comprising:

opposed first and second axial ends, the distance between the axial ends defining the nut depth;

first and second end faces, each of the first and second end faces extending from an interior edge to an exterior edge and from the first to the second axial ends, and parallel to each other;

an interior surface including at least one female threaded portion adapted to engage a selected male thread, the female threaded portion extending from a first thread edge to a second thread edge and having a selected thread depth, the first thread edge forming a thread cutting edge;

a first full exterior flat proximate the first end face exterior edge and opposed parallel second partial exterior flat, proximate the second end face exterior edge, the distance between the first and second exterior flats defining the nut width;

a first semi-circular back wall extending between the first and second flats, the portion of the first back wall proximate the first exterior flat extending between the first and second axial ends;

a second semi-circular back wall displaced inwardly from the first exterior wall to form a shoulder surface, the second semi-circular back wall extending from the second end face to a third exterior flat;

the maximum distance between opposed points on the respective first and second half nut first semi-circular back walls when the first and second half nuts are fully engaged against the threaded rod defining the nut breadth;

the distance between the respective first and second half nut third flats when the first and second half nuts are fully engaged against the threaded rod equal to the nut width; and,

a first bevel surface extending along the intersection of the first semi-circular back wall and the first axial end, defining a half nut first beveled end and having a first bevel angle;

wherein, when the first and second half nuts engage the threaded rod, the respective first and second end faces of the first and second half nuts do not contact each other;

the nut housing comprising:

an end wall having exterior and interior surfaces and a center aperture, the end wall interior surface including a concave tapered portion centered on the center aperture and matching the first bevel angle to receive a half nut beveled end, the end wall exterior surface having a flat face;

enclosing sidewalls extending from the end wall to an edge face and having exterior and interior surfaces, the edge face parallel to the end wall exterior face, the side wall exterior surfaces adapted to receive a torque

device, the interior surfaces of the end wall and sidewalls defining a cavity; and,

opposed first and second interior flats projecting into the cavity proximate the end wall interior surface, each of the first and second interior flats including a flat engagement surface and a first lip distal from the nut housing end wall interior surface, the distance between the flat engagement surfaces defining a slot width not less than the nut width so as to slidingly engage the half nut exterior flats, and the maximum distance from the end wall interior surface to the first shoulder less than the nut depth, the first and second interior flats further including opposed first and second semi-circular engagement surfaces disposed proximate the tapered surface and having a curvature radius less than the housing sidewall interior surface;

wherein, the distance between sidewall interior surfaces across the cavity in the axis parallel to the interior flats defines a slot length greater than the nut breadth by at least the nut thread depth; and,

the compression portion comprising a resilient member disposed within the nut housing cavity to urge the first and second half nuts against the end wall interior surface.

22. A fastener system as in claim 21, each of the first and second half nuts interior surfaces further comprising:

a plurality of female threaded portions, a adapted to engage a selected male thread, each female threaded portion extending from a first thread edge to a second thread edge and having a selected thread depth, the first thread edge forming a thread cutting edge.

23. A fastener system comprising a nut assembly, the nut assembly including:

a first set of opposed first and second half nuts having first and second axial ends, each half nut having a torque engagement first portion formed into at least a portion of its perimeter and at least one axial end including a beveled surface;

a nut housing having an interior cavity to removably receive the first and second half nuts around a threaded rod, the nut housing including first and second torque engagement second portions formed into its internal cavity to engage the corresponding half nut torque engagement first portions, and a concave tapered interior end surface to engage the first and second half nut beveled surfaces;

a compression portion removably disposed within the nut housing interior cavity to urge the first and second half nut beveled surfaces against the nut housing concave tapered interior surface; and,

a removable retaining element adapted to retain the compression portion within the nut housing interior cavity.

24. A fastener system as in claims 1, 2, 21 or 23, further comprising:

the compression portion comprising a wave spring.

25. A fastener system as in claims 1, 2, 21 or 23, further comprising:

the retaining element comprising a flat helical spring.

26. A fastener system as in claim 23, further comprising:

a plurality of sets of half nuts, each of the sets adapted to engage a selected male thread size.

27. A fastener system as in claim 26, further comprising:

wherein at least one set of the plurality of sets of half nuts includes a thread cutting edge on each half nut.

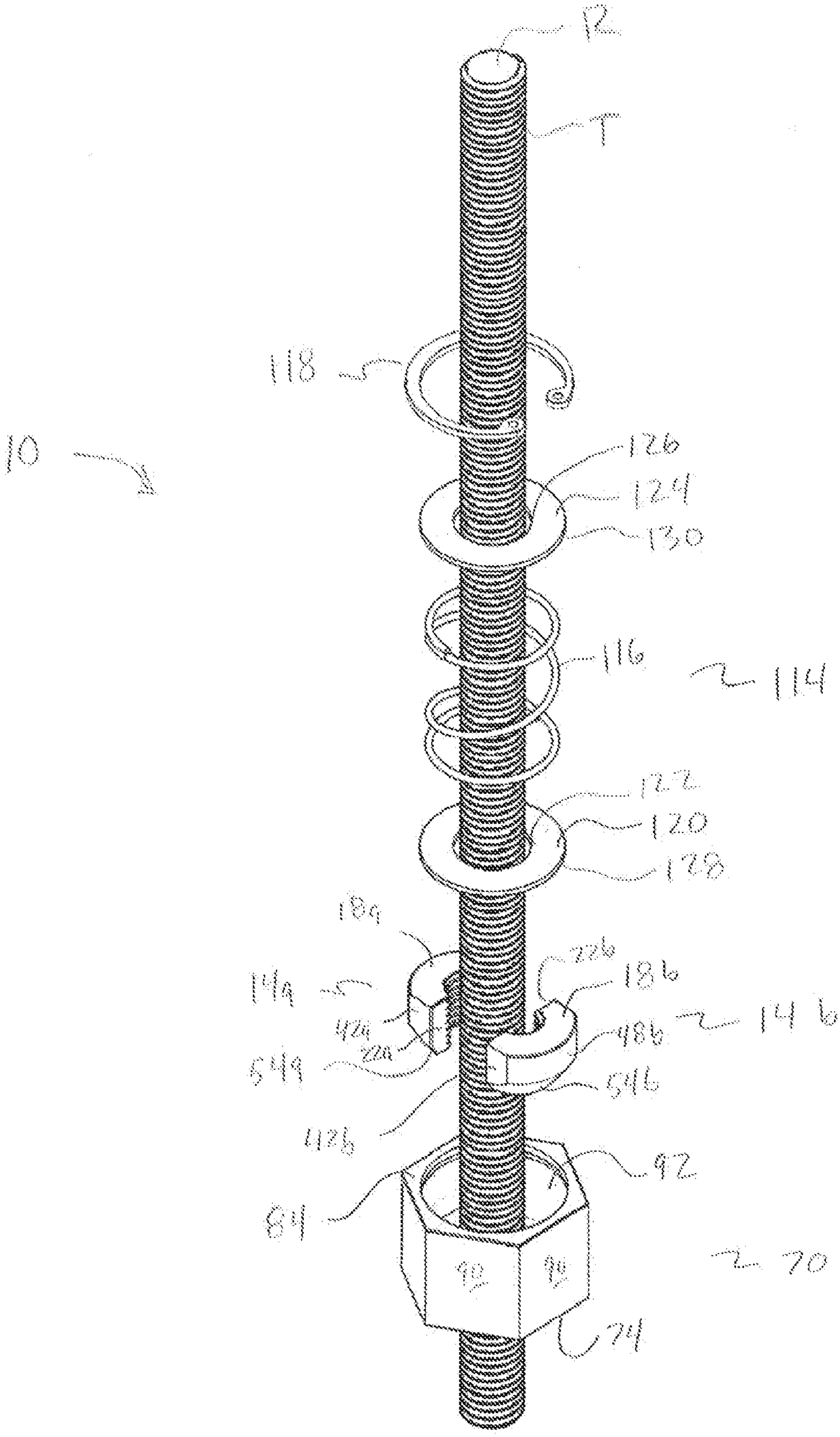
12
T
118
10
126
124
130
116
114
122
120
128
184
182
186
146
148
426
220
486
548
546
426
92
84
70
74

FIGURE 1

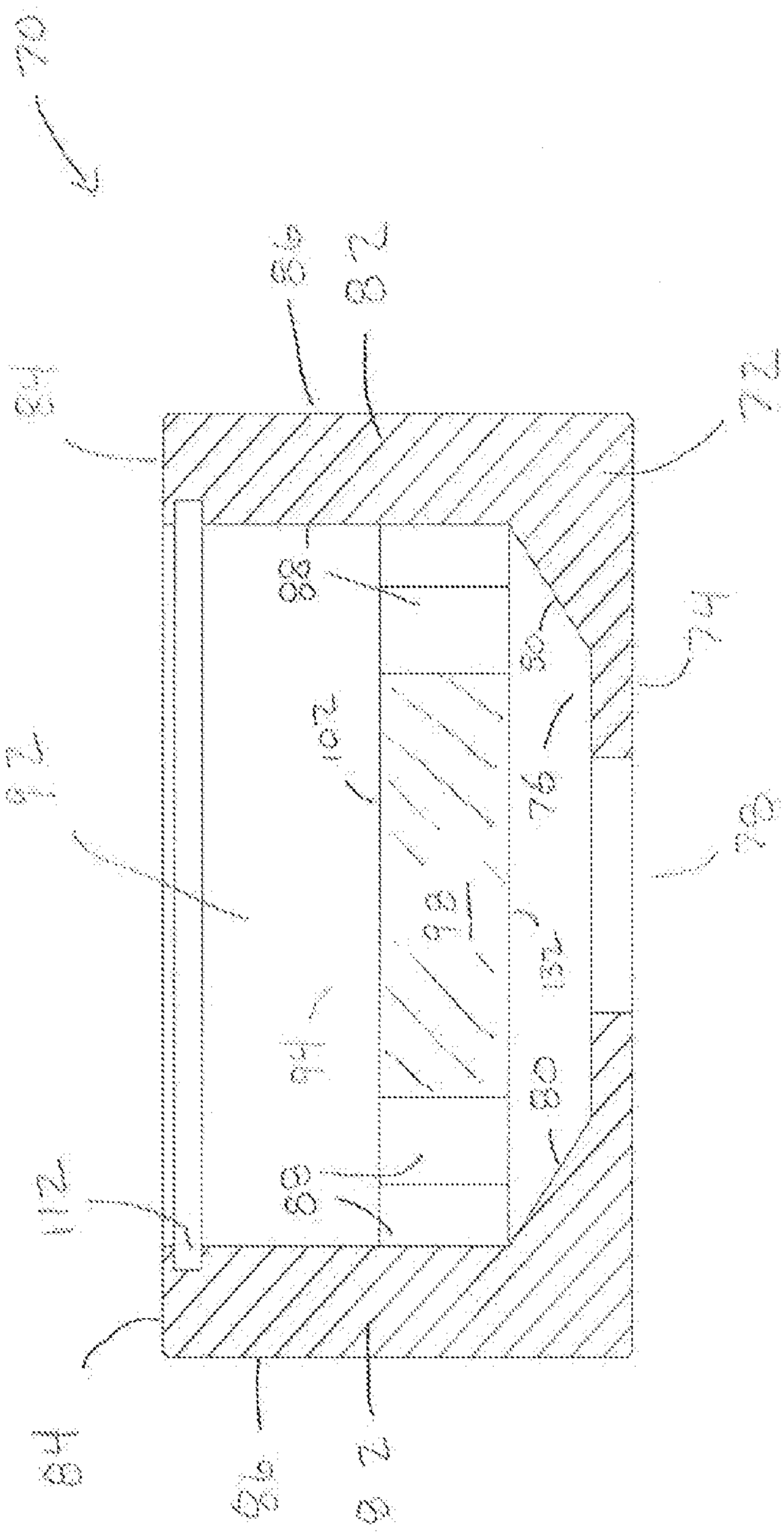

FIGURE 2

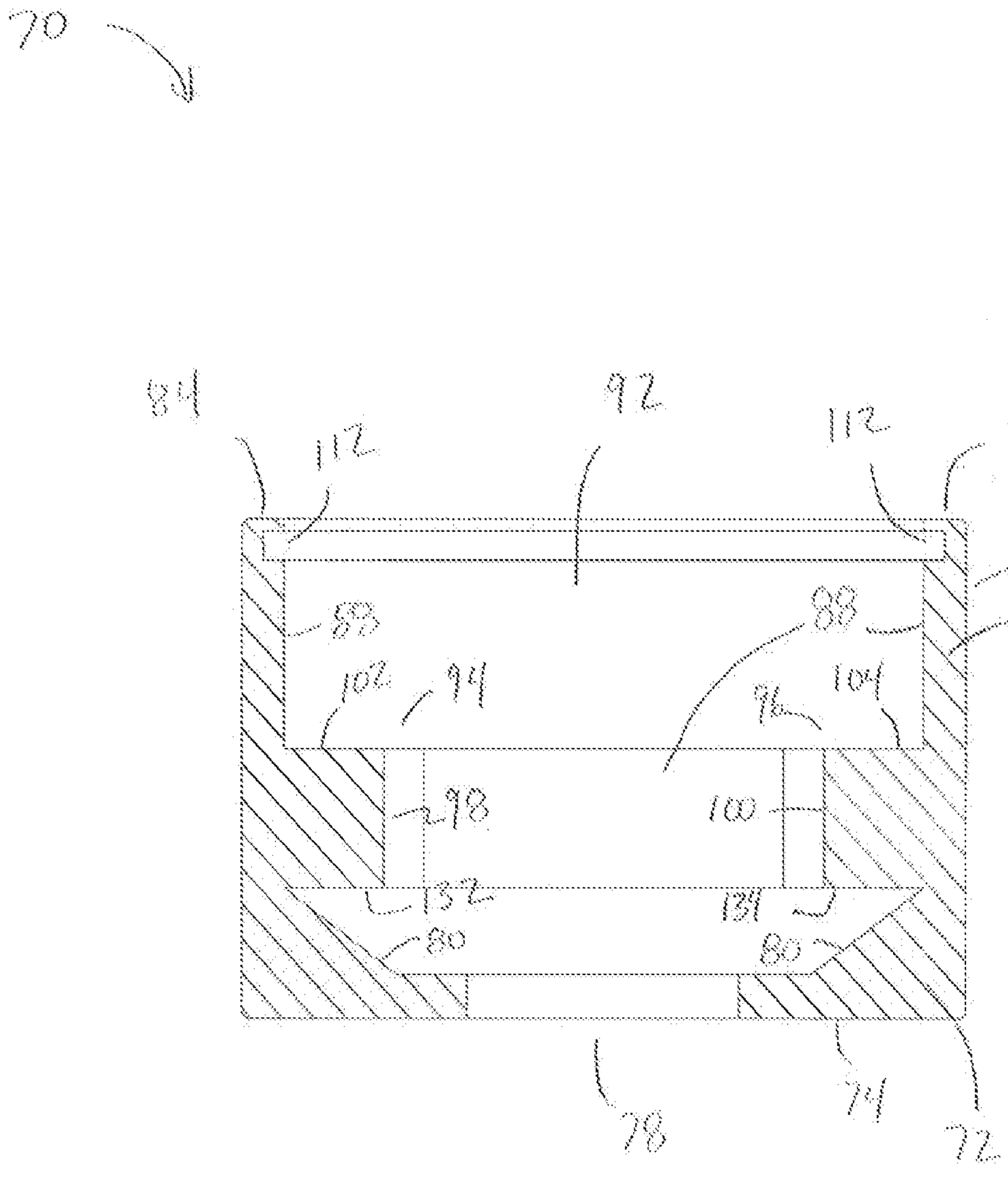
70
84
92
112
112
84
86
82
88
88
102
94
96
104
98
100
132
134
80
80
78
74
72

FIGURE 3

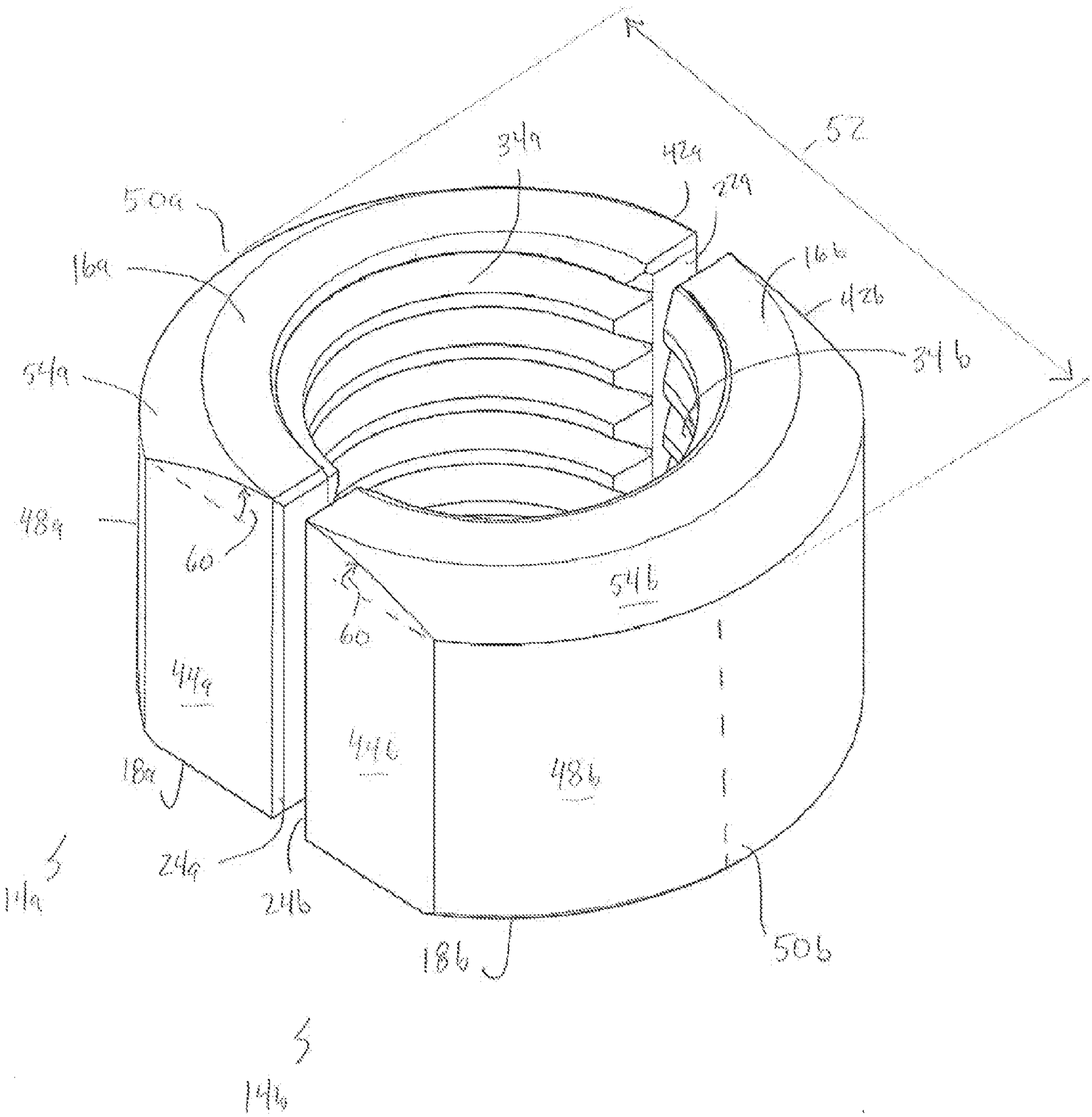
52
34a
42a
50a
22a
16a
16b
42b
34b
54a
48a
60
60
54b
44a
44b
48b
18a
18b
24a
24b
14a
14b
50b

FIGURE 4

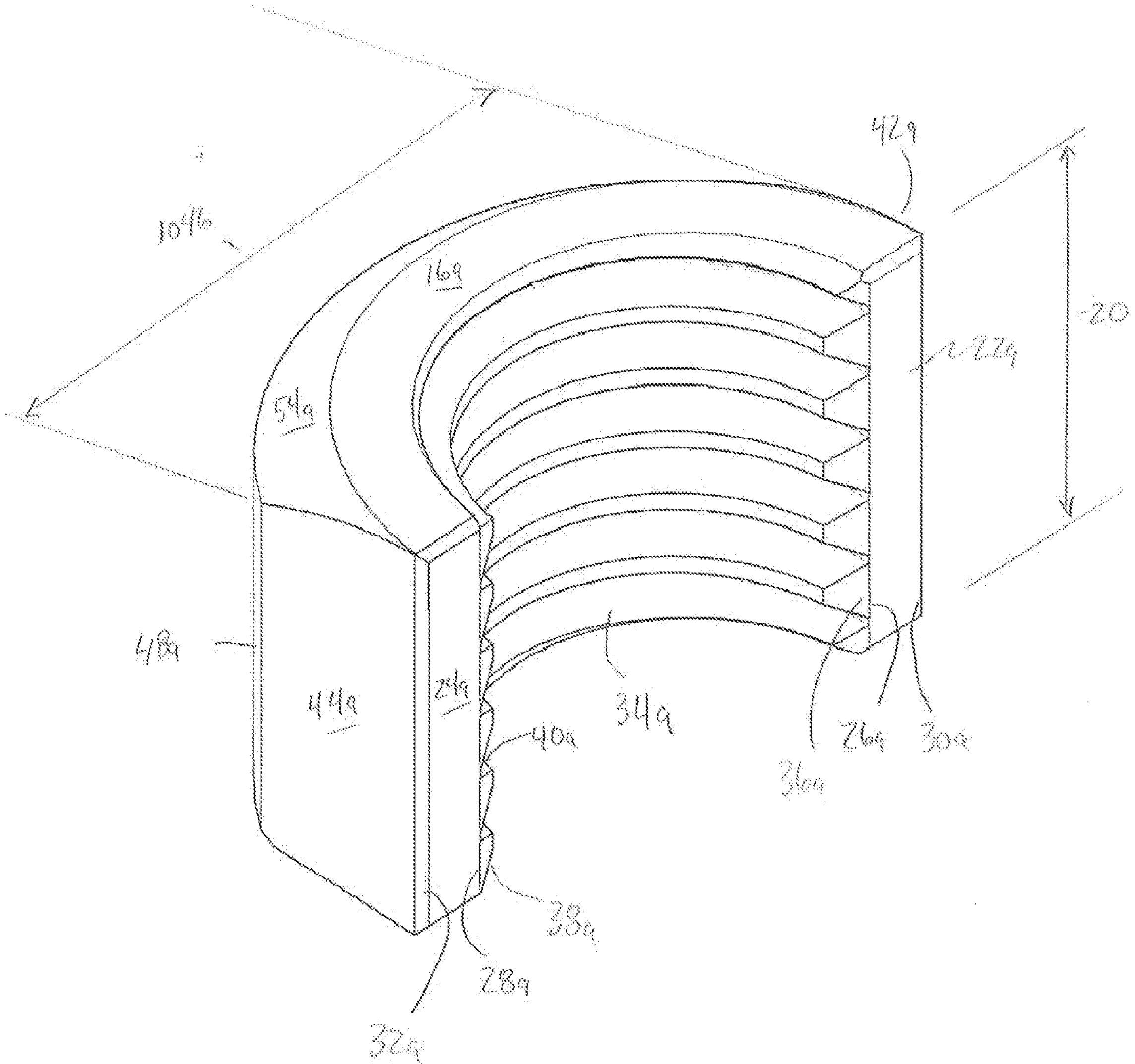
42a
104a
16a
54a
20
22a
48a
44a
24a
34a
40a
26a
30a
36a
38a
28a
32a

FIGURE 5

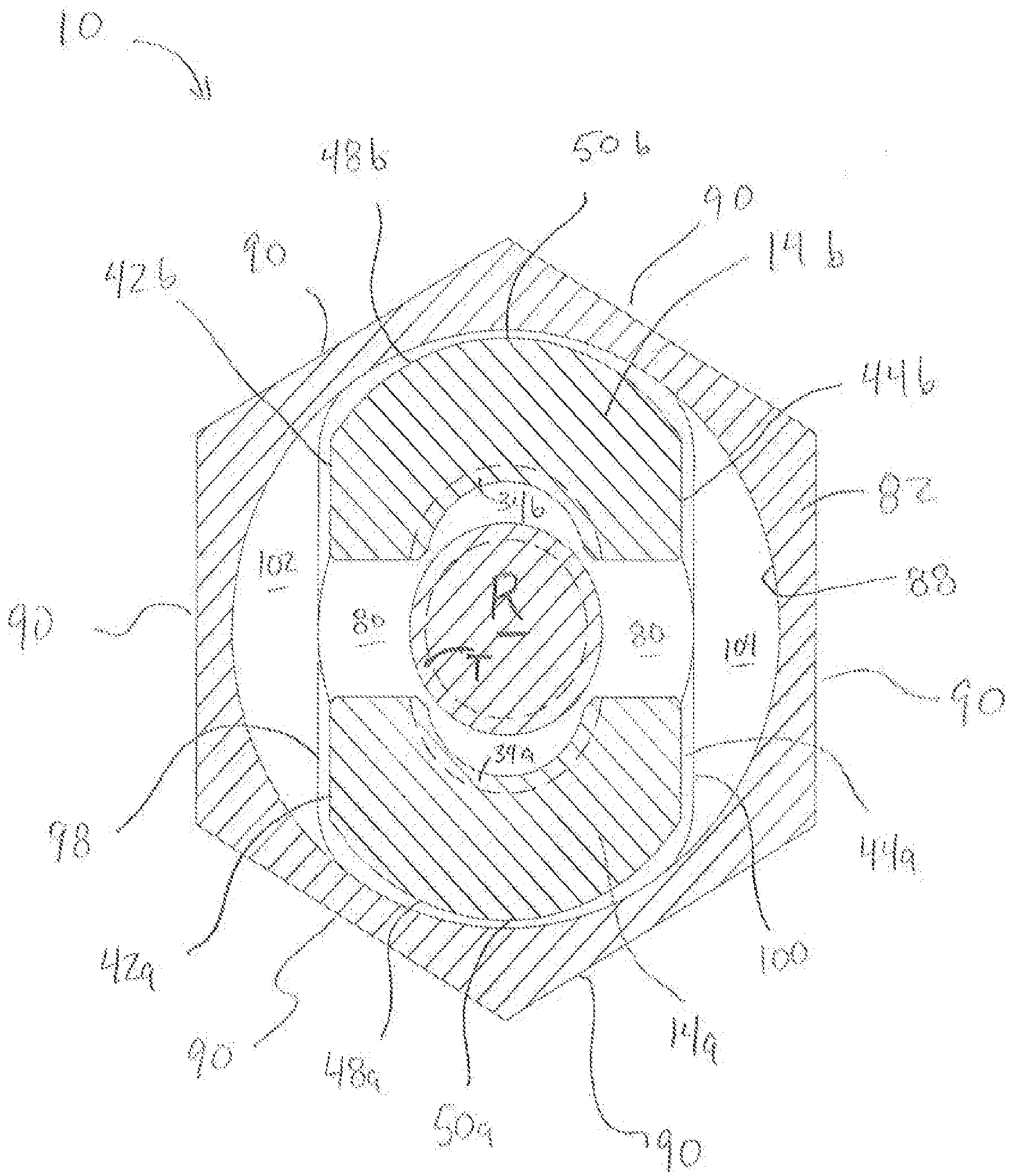
10
48b
50b
90
90
14b
42b
44b
82
31b
102
88
90
80
80
101
90
39a
98
44a
42a
100
90
48a
50a
14a
90

FIGURE 6

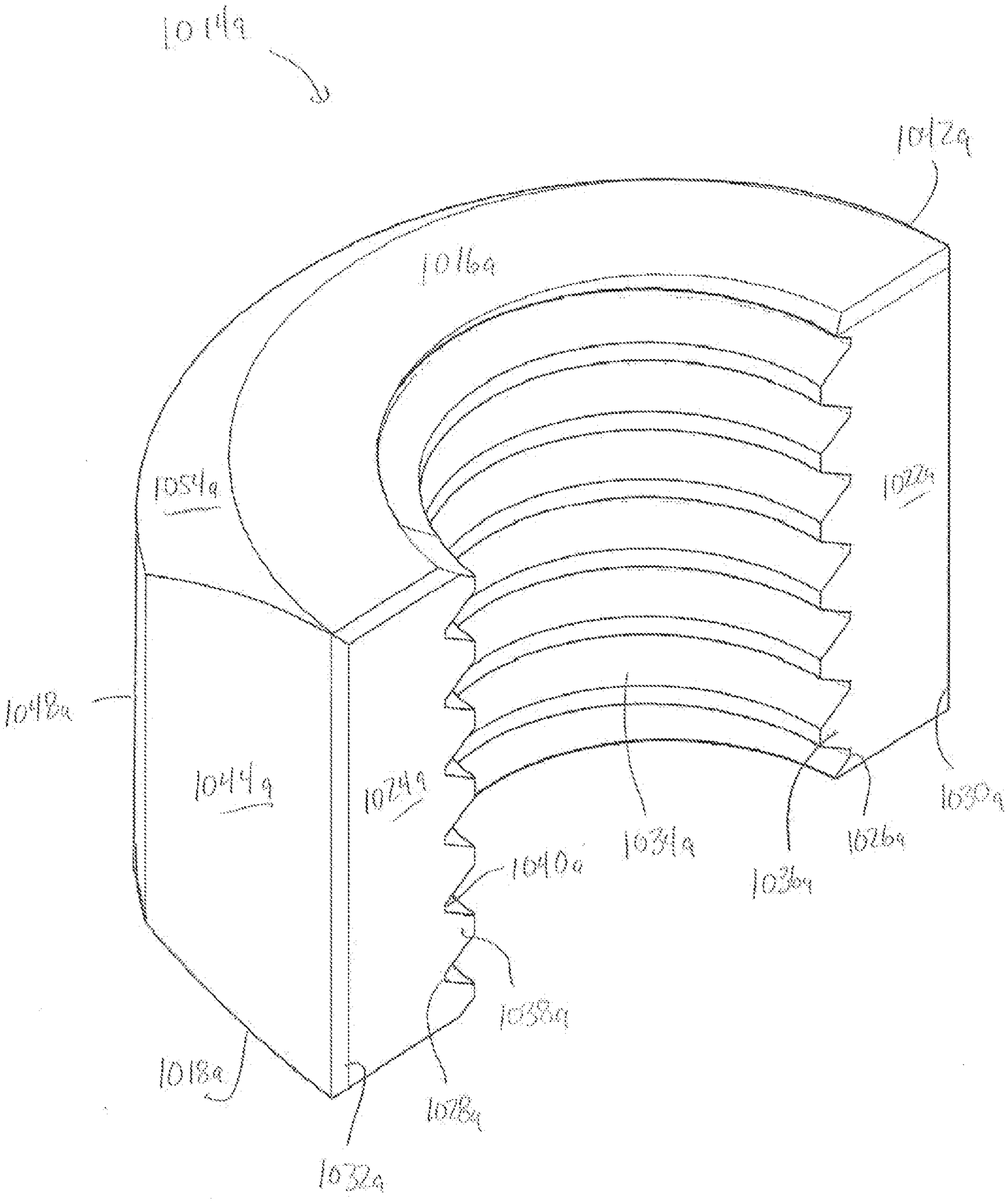
1014a
1012a
1016a
1054a
1022a
1048a
1044a
1024a
1030a
1026a
1040a
1034a
1028a
1038a
1018a
1032a

FIGURE 7

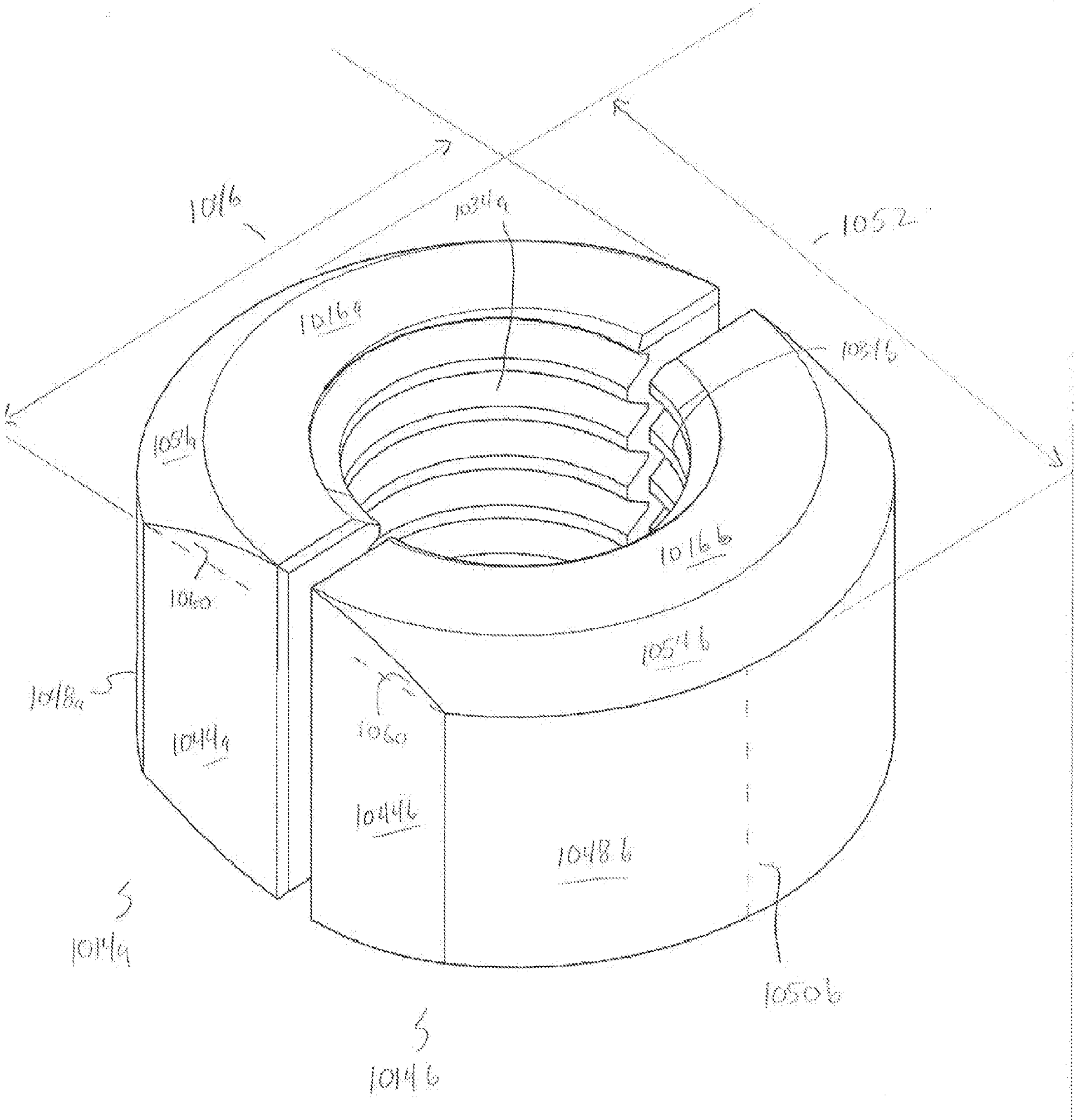
1016
1016a
1052
1016b
1052b
1050b
1048b
1046b
1044b
1060
1046
1044a
1048a
1046a

FIGURE 8

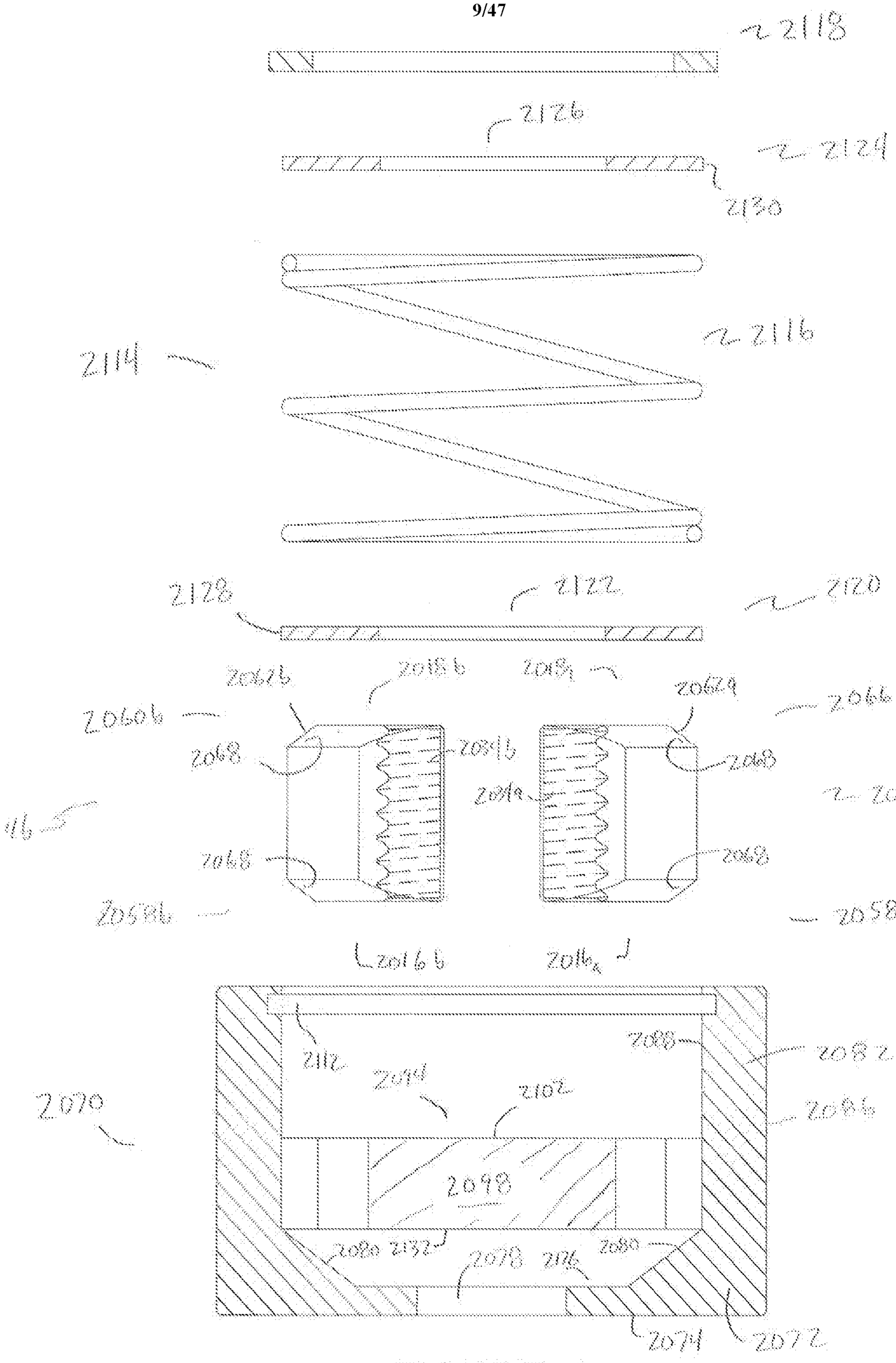
2118
2126
2124
2130
2114
2116
2128
2122
2120
2062b
2018b
2060b
2068
2018b
2068
2058b
2062g
2060g
2018g
2068
2018g
2068
2058g
46
2016b
2016g
2112
2094
2102
2088
2082
2084
2070
2098
2088
2132
2078
2076
2088
2074
2072

FIGURE 9

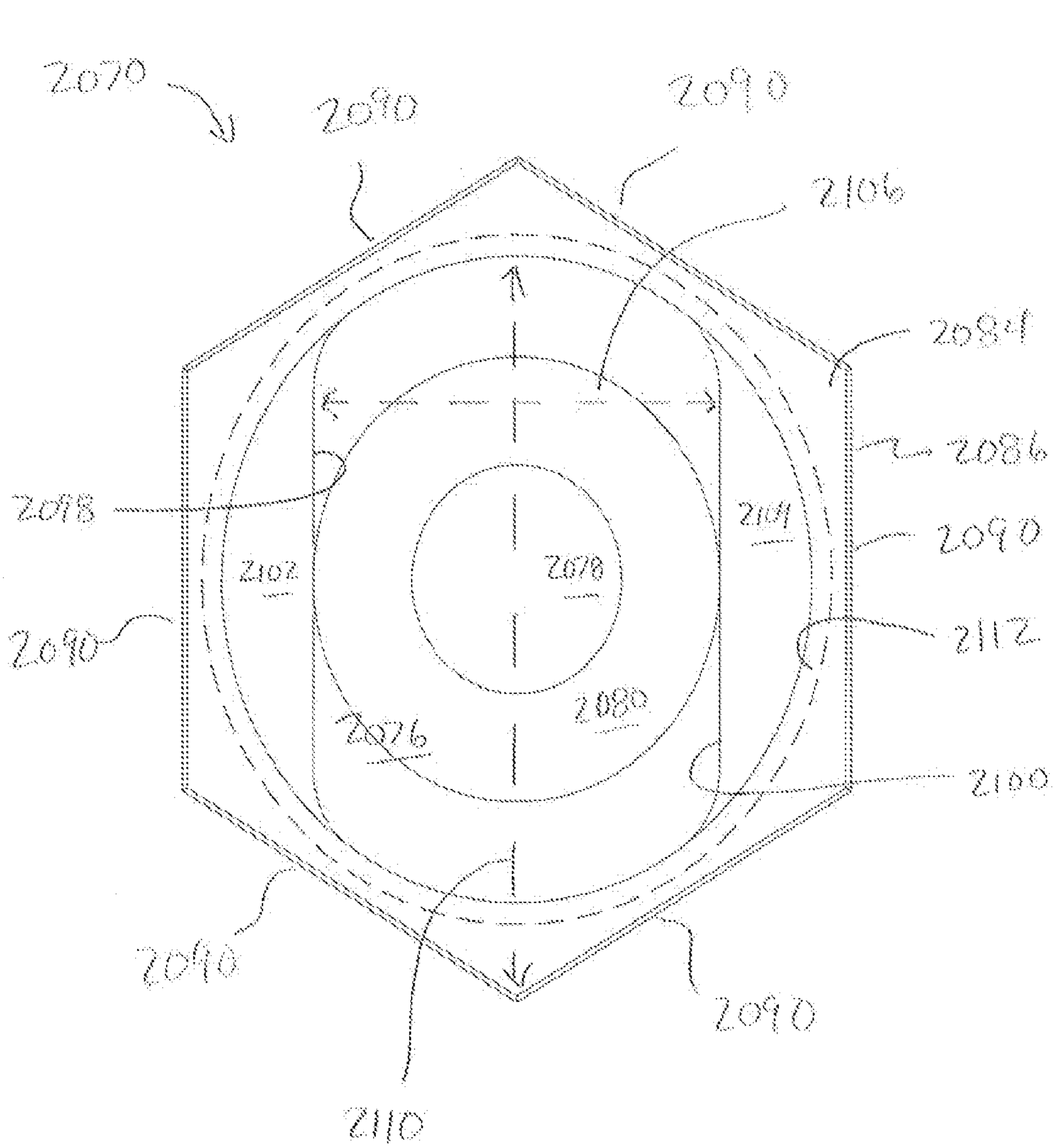
2070
2090
2090
2106
2084
2086
2090
2112
2100
2090
2090
2110
2098
2102
2078
2104
2080
2076

FIGURE 10

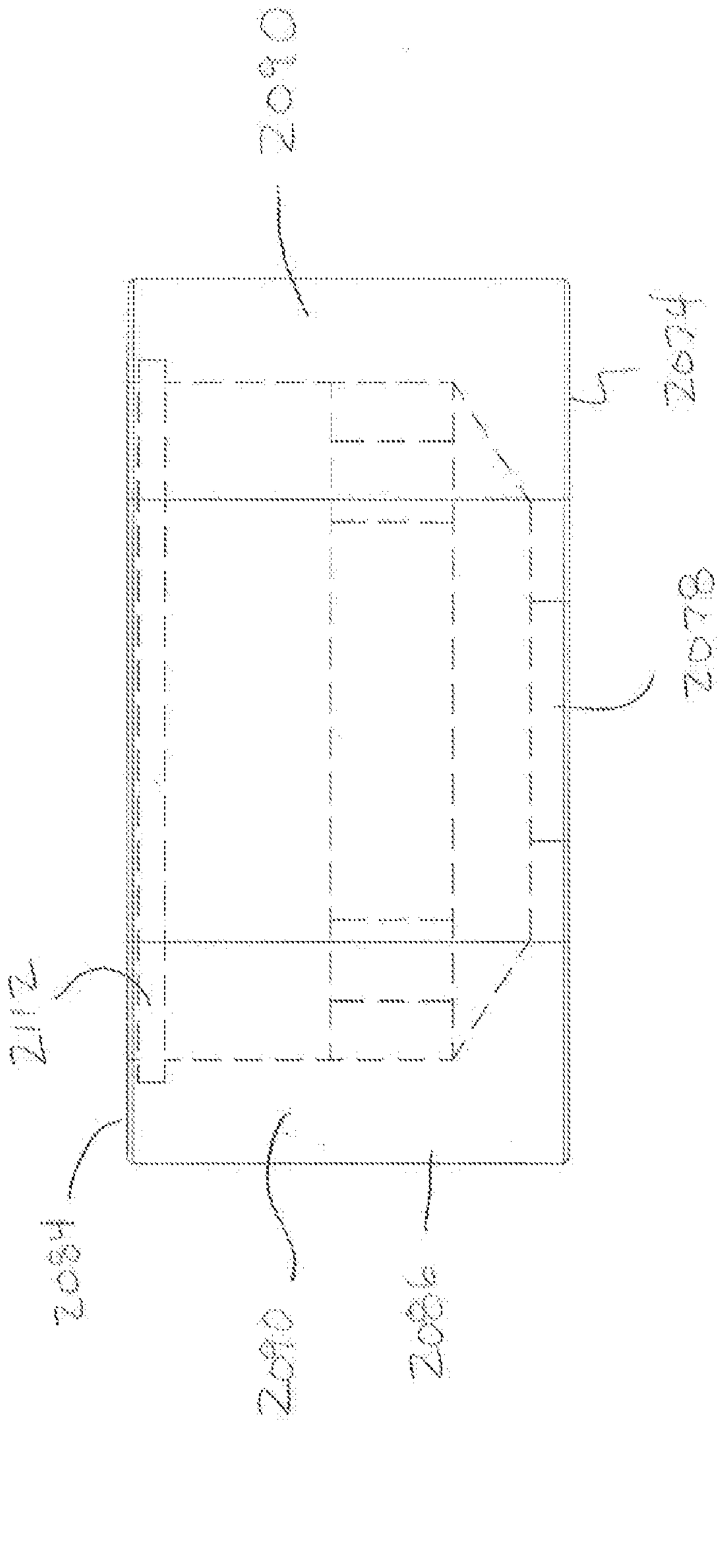

FIGURE 11

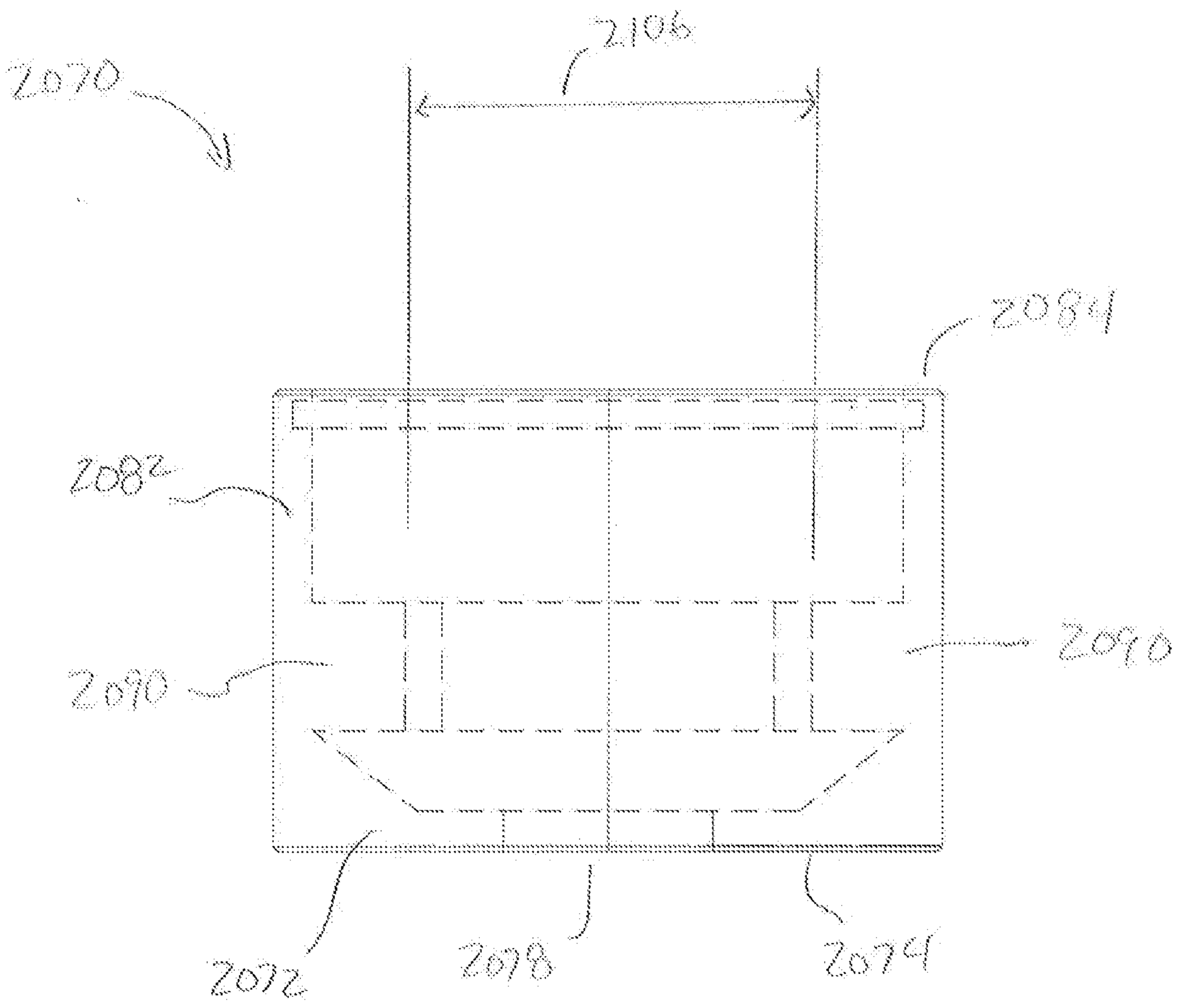

FIGURE 12

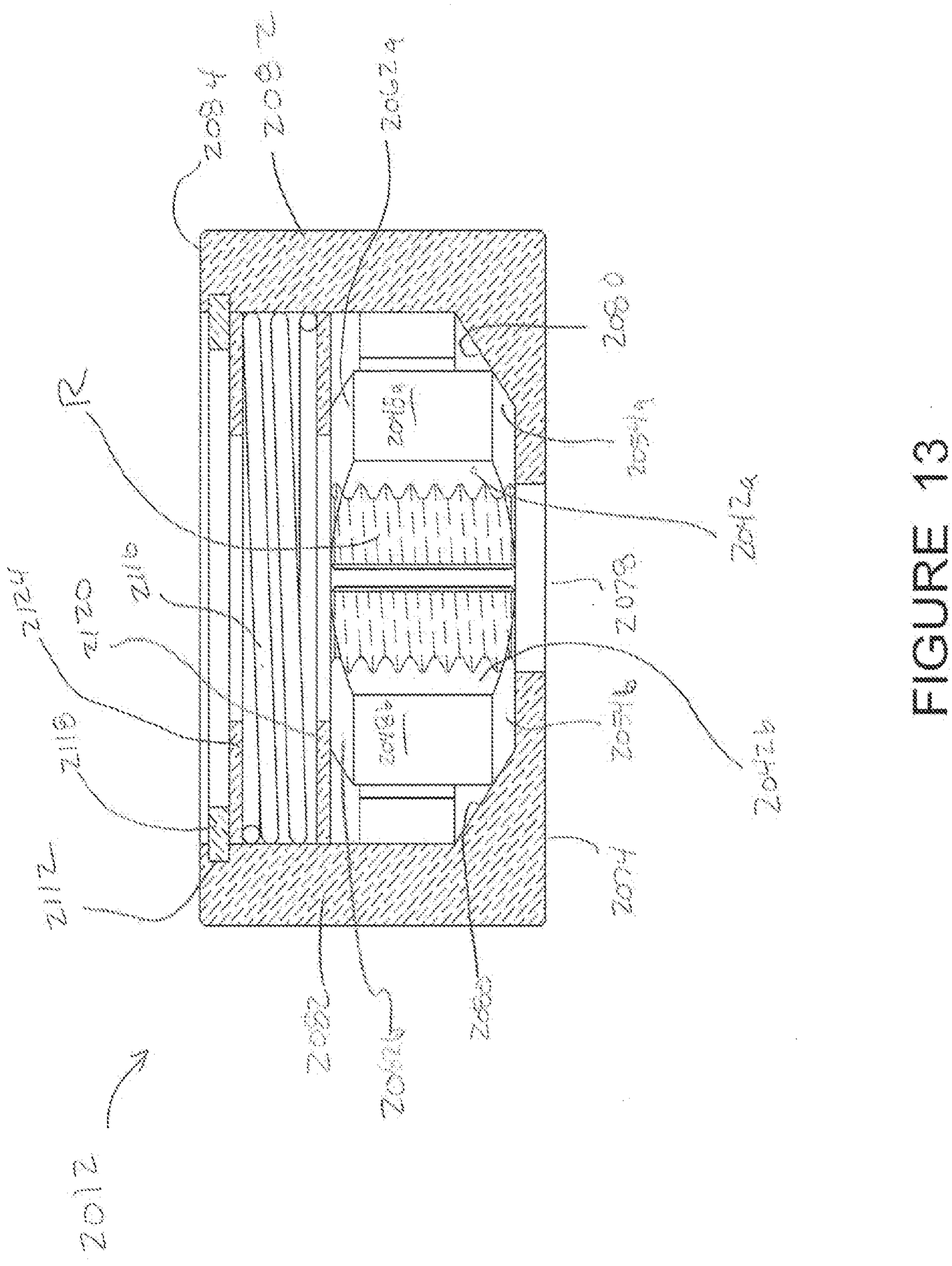
208
208a
208b
208c
208d
208e
208f
208g
208h
208i
208j
208k
208l
208m
208n
208o
208p
208q
208r
208s
208t
208u
208v
208w
208x
208y
208z
212
212a
212b
212c
212d
212e
212f
212g
212h
212i
212j
212k
212l
212m
212n
212o
212p
212q
212r
212s
212t
212u
212v
212w
212x
212y
212z
214
214a
214b
214c
214d
214e
214f
214g
214h
214i
214j
214k
214l
214m
214n
214o
214p
214q
214r
214s
214t
214u
214v
214w
214x
214y
214z
216
216a
216b
216c
216d
216e
216f
216g
216h
216i
216j
216k
216l
216m
216n
216o
216p
216q
216r
216s
216t
216u
216v
216w
216x
216y
216z

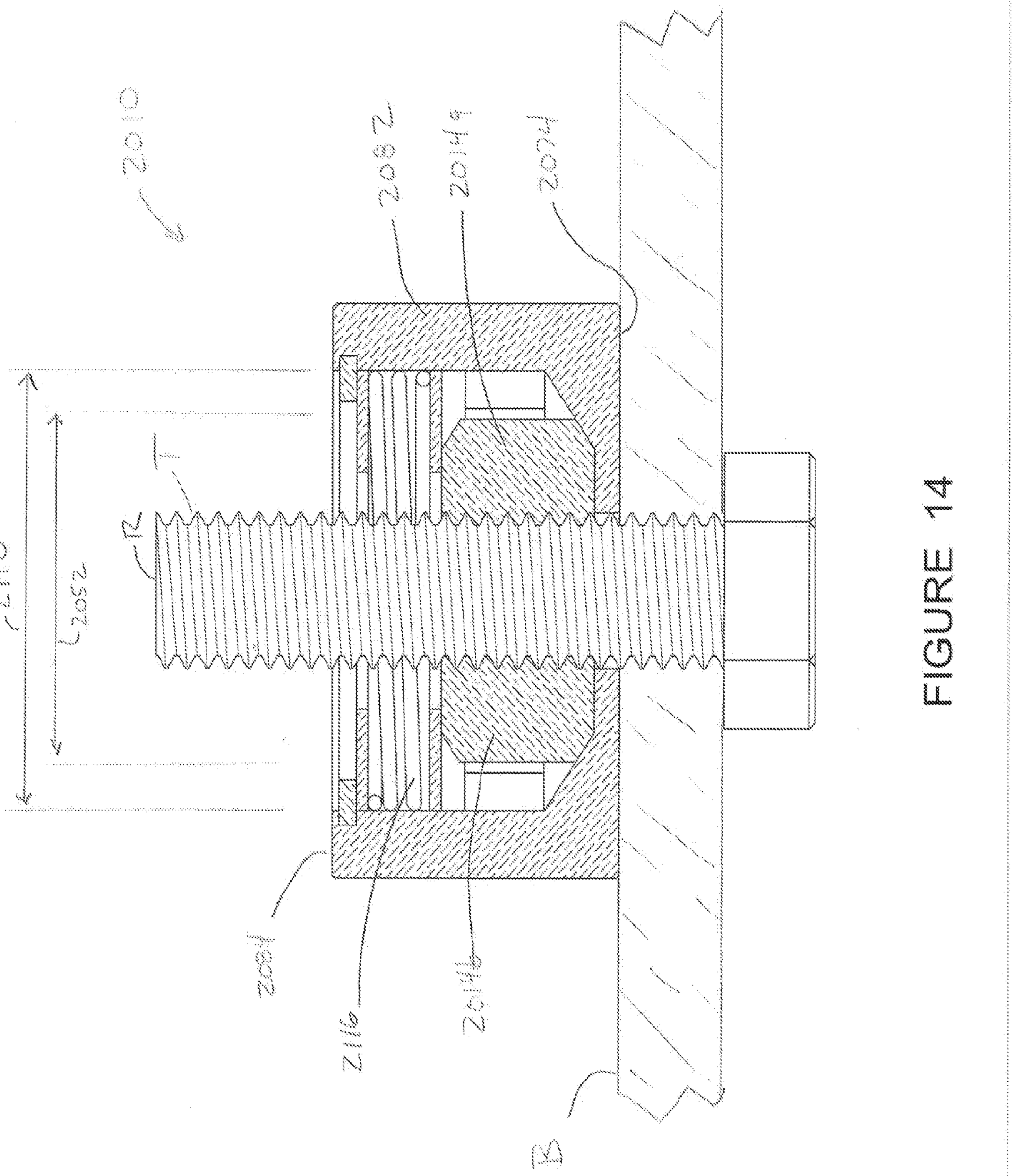
2110
2052
2082
2014a
2024
L
2054
2114
2114a
2114b
2054a
2054b
B

FIGURE 14

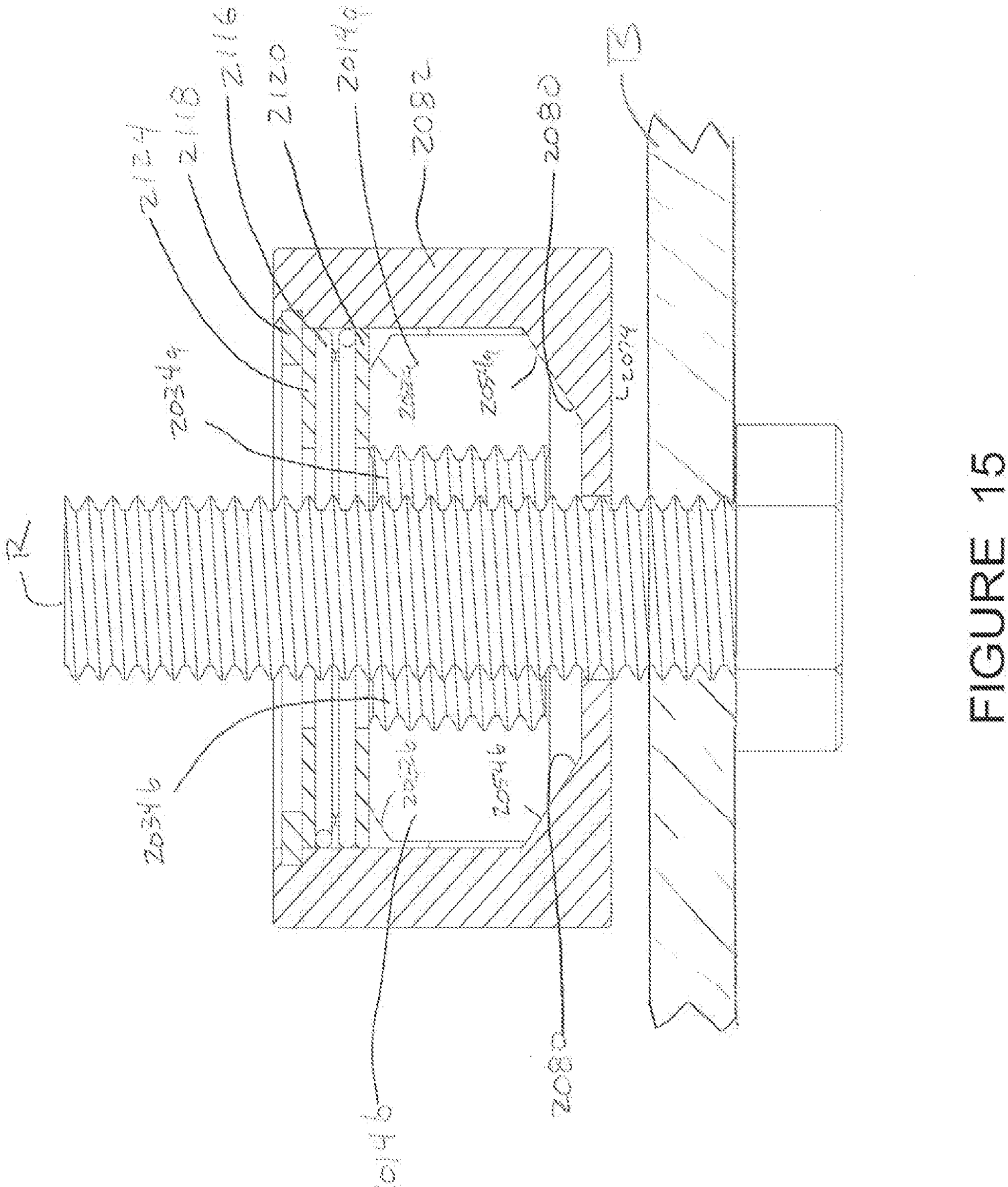
2034a
2034b
2034c
2034d
2034e
2034f
2034g
2034h
2034i
2034j
2034k
2034l
2034m
2034n
2034o
2034p
2034q
2034r
2034s
2034t
2034u
2034v
2034w
2034x
2034y
2034z
2034aa
2034ab
2034ac
2034ad
2034ae
2034af
2034ag
2034ah
2034ai
2034aj
2034ak
2034al
2034am
2034an
2034ao
2034ap
2034aq
2034ar
2034as
2034at
2034au
2034av
2034aw
2034ax
2034ay
2034az
2034ba
2034bb
2034bc
2034bd
2034be
2034bf
2034bg
2034bh
2034bi
2034bj
2034bk
2034bl
2034bm
2034bn
2034bo
2034bp
2034bq
2034br
2034bs
2034bt
2034bu
2034bv
2034bw
2034bx
2034by
2034bz
2034ca
2034cb
2034cc
2034cd
2034ce
2034cf
2034cg
2034ch
2034ci
2034cj
2034ck
2034cl
2034cm
2034cn
2034co
2034cp
2034cq
2034cr
2034cs
2034ct
2034cu
2034cv
2034cw
2034cx
2034cy
2034cz
2034da
2034db
2034dc
2034dd
2034de
2034df
2034dg
2034dh
2034di
2034dj
2034dk
2034dl
2034dm
2034dn
2034do
2034dp
2034dq
2034dr
2034ds
2034dt
2034du
2034dv
2034dw
2034dx
2034dy
2034dz
2034ea
2034eb
2034ec
2034ed
2034ee
2034ef
2034eg
2034eh
2034ei
2034ej
2034ek
2034el
2034em
2034en
2034eo
2034ep
2034eq
2034er
2034es
2034et
2034eu
2034ev
2034ew
2034ex
2034ey
2034ez
2034fa
2034fb
2034fc
2034fd
2034fe
2034ff
2034fg
2034fh
2034fi
2034fj
2034fk
2034fl
2034fm
2034fn
2034fo
2034fp
2034fq
2034fr
2034fs
2034ft
2034fu
2034fv
2034fw
2034fx
2034fy
2034fz
2034ga
2034gb
2034gc
2034gd
2034ge
2034gf
2034gg
2034gh
2034gi
2034gj
2034gk
2034gl
2034gm
2034gn
2034go
2034gp
2034gq
2034gr
2034gs
2034gt
2034gu
2034gv
2034gw
2034gx
2034gy
2034gz
2034ha
2034hb
2034hc
2034hd
2034he
2034hf
2034hg
2034hh
2034hi
2034hj
2034hk
2034hl
2034hm
2034hn
2034ho
2034hp
2034hq
2034hr
2034hs
2034ht
2034hu
2034hv
2034hw
2034hx
2034hy
2034hz
2034ia
2034ib
2034ic
2034id
2034ie
2034if
2034ig
2034ih
2034ii
2034ij
2034ik
2034il
2034im
2034in
2034io
2034ip
2034iq
2034ir
2034is
2034it
2034iu
2034iv
2034iw
2034ix
2034iy
2034iz
2034ja
2034jb
2034jc
2034jd
2034je
2034jf
2034jg
2034jh
2034ji
2034jj
2034jk
2034jl
2034jm
2034jn
2034jo
2034jp
2034jq
2034jr
2034js
2034jt
2034ju
2034jv
2034jw
2034jx
2034jy
2034jz
2034ka
2034kb
2034kc
2034kd
2034ke
2034kf
2034kg
2034kh
2034ki
2034kj
2034kk
2034kl
2034km
2034kn
2034ko
2034kp
2034kq
2034kr
2034ks
2034kt
2034ku
2034kv
2034kw
2034kx
2034ky
2034kz
2034la
2034lb
2034lc
2034ld
2034le
2034lf
2034lg
2034lh
2034li
2034lj
2034lk
2034ll
2034lm
2034ln
2034lo
2034lp
2034lq
2034lr
2034ls
2034lt
2034lu
2034lv
2034lw
2034lx
2034ly
2034lz
2034ma
2034mb
2034mc
2034md
2034me
2034mf
2034mg
2034mh
2034mi
2034mj
2034mk
2034ml
2034mm
2034mn
2034mo
2034mp
2034mq
2034mr
2034ms
2034mt
2034mu
2034mv
2034mw
2034mx
2034my
2034mz
2034na
2034nb
2034nc
2034nd
2034ne
2034nf
2034ng
2034nh
2034ni
2034nj
2034nk
2034nl
2034nm
2034nn
2034no
2034np
2034nq
2034nr
2034ns
2034nt
2034nu
2034nv
2034nw
2034nx
2034ny
2034nz
2034oa
2034ob
2034oc
2034od
2034oe
2034of
2034og
2034oh
2034oi
2034oj
2034ok
2034ol
2034om
2034on
2034oo
2034op
2034oq
2034or
2034os
2034ot
2034ou
2034ov
2034ow
2034ox
2034oy
2034oz
2034pa
2034pb
2034pc
2034pd
2034pe
2034pf
2034pg
2034ph
2034pi
2034pj
2034pk
2034pl
2034pm
2034pn
2034po
2034pp
2034pq
2034pr
2034ps
2034pt
2034pu
2034pv
2034pw
2034px
2034py
2034pz
2034qa
2034qb
2034qc
2034qd
2034qe
2034qf
2034qg
2034qh
2034qi
2034qj
2034qk
2034ql
2034qm
2034qn
2034qo
2034qp
2034qq
2034qr
2034qs
2034qt
2034qu
2034qv
2034qw
2034qx
2034qy
2034qz
2034ra
2034rb
2034rc
2034rd
2034re
2034rf
2034rg
2034rh
2034ri
2034rj
2034rk
2034rl
2034rm
2034rn
2034ro
2034rp
2034rq
2034rr
2034rs
2034rt
2034ru
2034rv
2034rw
2034rx
2034ry
2034rz
2034sa
2034sb
2034sc
2034sd
2034se
2034sf
2034sg
2034sh
2034si
2034sj
2034sk
2034sl
2034sm
2034sn
2034so
2034sp
2034sq
2034sr
2034ss
2034st
2034su
2034sv
2034sw
2034sx
2034sy
2034sz
2034ta
2034tb
2034tc
2034td
2034te
2034tf
2034tg
2034th
2034ti
2034tj
2034tk
2034tl
2034tm
2034tn
2034to
2034tp
2034tq
2034tr
2034ts
2034tt
2034tu
2034tv
2034tw
2034tx
2034ty
2034tz
2034ua
2034ub
2034uc
2034ud
2034ue
2034uf
2034ug
2034uh
2034ui
2034uj
2034uk
2034ul
2034um
2034un
2034uo
2034up
2034uq
2034ur
2034us
2034ut
2034uu
2034uv
2034uw
2034ux
2034uy
2034uz
2034va
2034vb
2034vc
2034vd
2034ve
2034vf
2034vg
2034vh
2034vi
2034vj
2034vk
2034vl
2034vm
2034vn
2034vo
2034vp
2034vq
2034vr
2034vs
2034vt
2034vu
2034vv
2034vw
2034vx
2034vy
2034vz
2034wa
2034wb
2034wc
2034wd
2034we
2034wf
2034wg
2034wh
2034wi
2034wj
2034wk
2034wl
2034wm
2034wn
2034wo
2034wp
2034wq
2034wr
2034ws
2034wt
2034wu
2034wv
2034ww
2034wx
2034wy
2034wz
2034xa
2034xb
2034xc
2034xd
2034xe
2034xf
2034xg
2034xh
2034xi
2034xj
2034xk
2034xl
2034xm
2034xn
2034xo
2034xp
2034xq
2034xr
2034xs
2034xt
2034xu
2034xv
2034xw
2034xx
2034xy
2034xz
2034ya
2034yb
2034yc
2034yd
2034ye
2034yf
2034yg
2034yh
2034yi
2034yj
2034yk
2034yl
2034ym
2034yn
2034yo
2034yp
2034yq
2034yr
2034ys
2034yt
2034yu
2034yv
2034yw
2034yx
2034yy
2034yz
2034za
2034zb
2034zc
2034zd
2034ze
2034zf
2034zg
2034zh
2034zi
2034zj
2034zk
2034zl
2034zm
2034zn
2034zo
2034zp
2034zq
2034zr
2034zs
2034zt
2034zu
2034zv
2034zw
2034zx
2034zy
2034zz
2034aaa
2034aab
2034aac
2034aad
2034aae
2034aaf
2034aag
2034aah
2034aai
2034aaj
2034aak
2034aal
2034aam
2034aan
2034aao
2034aap
2034aaq
2034aar
2034aas
2034aat
2034aau
2034aav
2034aaw
2034aax
2034aay
2034aaz
2034aba
2034abb
2034abc
2034abd
2034abe
2034abf
2034abg
2034abh
2034abi
2034abj
2034abk
2034abl
2034abm
2034abn
2034abo
2034abp
2034abq
2034abr
2034abs
2034abt
2034abu
2034abv
2034abw
2034abx
2034aby
2034abz
2034aca
2034acb
2034acc
2034acd
2034ace
2034acf
2034acg
2034ach
2034aci
2034acj
2034ack
2034acl
2034acm
2034acn
2034aco
2034acp
2034acq
2034acr
2034acs
2034act
2034acu
2034acv
2034acw
2034acx
2034acy
2034acz
2034ada
2034adb
2034adc
2034add
2034ade
2034adf
2034adg
2034adh
2034adi
2034adj
2034adk
2034adl
2034adm
2034adn
2034ado
2034adp
2034adq
2034adr
2034ads
2034adt
2034adu
2034adv
2034adw
2034adx
2034ady
2034adz
2034aea
2034aeb
2034aec
2034aed
2034aee
2034aef
2034aeg
2034aeh
2034aei
2034aej
2034aek
2034ael
2034aem
2034aen
2034aeo
2034aep
2034aeq
2034aer
2034aes
2034aet
2034aeu
2034aev
2034aew
2034aex
2034aey
2034aez
2034afa
2034afb
2034afc
2034afd
2034afe
2034aff
2034afg
2034afh
2034afi
2034afj
2034afk
2034afl
2034afm
2034afn
2034afo
2034afp
2034afq
2034afr
2034afs
2034aft
2034afu
2034afv
2034afw
2034afx
2034afy
2034afz
2034aga
2034agb
2034agc
2034agd
2034age
2034agf
2034agg
2034agh
2034agi
2034agj
2034agk
2034agl
2034agm
2034agn
2034ago
2034agp
2034agq
2034agr
2034ags
2034agt
2034agu
2034agv
2034agw
2034agx
2034agy
2034agz
2034aha
2034ahb
2034ahc
2034ahd
2034ahe
2034ahf
2034ahg
2034ahh
2034ahi
2034ahj
2034ahk
2034ahl
2034ahm
2034ahn
2034aho
2034ahp
2034ahq
2034ahr
2034ahs
2034aht
2034ahu
2034ahv
2034ahw
2034ahx
2034ahy
2034ahz
2034aia
2034aib
2034aic
2034aid
2034aie
2034aif
2034aig
2034aih
2034aii
2034aij
2034aik
2034ail
2034aim
2034ain
2034aio
2034aip
2034aiq
2034air
2034ais
2034ait
2034aiu
2034aiv
2034aiw
2034aix
2034aiy
2034aiz
2034aja
2034ajb
2034ajc
2034ajd
2034aje
2034ajf
2034ajg
2034ajh
2034aji
2034ajj
2034ajk
2034ajl
2034ajm
2034ajn
2034ajo
2034ajp
2034ajq
2034ajr
2034ajs
2034ajt
2034aju
2034ajv
2034ajw
2034ajx
2034ajy
2034ajz
2034aka
2034akb
2034akc
2034akd
2034ake
2034akf
2034akg
2034akh
2034aki
2034akj
2034akk
2034akl
2034akm
2034akn
2034ako
2034akp
2034akq
2034akr
2034aks
2034akt
2034aku
2034akv
2034akw
2034akx
2034aky
2034akz
2034ala
2034alb
2034alc
2034ald
2034ale
2034alf
2034alg
2034alh
2034ali
2034alj
2034alk
2034all
2034alm
2034aln
2034alo
2034alp
2034alq
2034alr
2034als
2034alt
2034alu
2034alv
2034alw
2034alx
2034aly
2034alz
2034ama
2034amb
2034amc
2034amd
2034ame
2034amf
2034amg
2034amh
2034ami
2034amj
2034amk
2034aml
2034amm
2034amn
2034amo
2034amp
2034amq
2034amr
2034ams
2034amt
2034amu
2034amv
2034amw
2034amx
2034amy
2034amz
2034ana
2034anb
2034anc
2034and
2034ane
2034anf
2034ang
2034anh
2034ani
2034anj
2034ank
2034anl
2034anm
2034ann
2034ano
2034anp
2034anq
2034anr
2034ans
2034ant
2034anu
2034anv
2034anw
2034anx
2034any
2034anz
2034aoa
2034aob
2034aoc
2034aod
2034aoe
2034aof
2034aog
2034aoh
2034aoi
2034aoj
2034aok
2034aol
2034aom
2034aon
2034aoo
2034aop
2034aoq
2034aor
2034aos
2034aot
2034aou
2034aov
2034aow
2034aox
2034aoy
2034aoz
2034apa
2034apb
2034apc
2034apd
2034ape
2034apf
2034apg
2034aph
2034api
2034apj
2034apk
2034apl
2034apm
2034apn
2034apo
2034app
2034apq
2034apr
2034aps
2034apt
2034apu
2034apv
2034apw
2034apx
2034apy
2034apz
2034aqa
2034aqb
2034aqc
2034aqd
2034aqe
2034aqf
2034aqg
2034aqh
2034aqi
2034aqj
2034aqk
2034aql
2034aqm
2034aqn
2034aqo
2034aqp
2034aqq
2034aqr
2034aqs
2034aqt
2034aqu
2034aqv
2034aqw
2034aqx
2034aqy
2034aqz
2034ara
2034arb
2034arc
2034ard
2034are
2034arf
2034arg
2034arh
2034ari
2034arj
2034ark
2034arl
2034arm
2034arn
2034aro
2034arp
2034arq
2034arr
2034ars
2034art
2034aru
2034arv
2034arw
2034arx
2034ary
2034arz
2034asa
2034asb
2034asc
2034asd
2034ase
2034asf
2034asg
2034ash
2034asi
2034asj
2034ask
2034asl
2034asm
2034asn
2034aso
2034asp
2034asq
2034asr
2034ass
2034ast
2034asu
2034asv
2034asw
2034asx
2034asy
2034asz
2034ata
2034atb
2034atc
2034atd
2034ate
2034atf
2034atg
2034ath
2034ati
2034atj
2034atk
2034atl
2034atm
2034atn
2034ato
2034atp
2034atq
2034atr
2034ats
2034att
2034atu
2034atv
2034atw
2034atx
2034aty
2034atz
2034aua
2034aub
2034auc
2034aud
2034aue
2034auf
2034aug
2034auh
2034aui
2034auj
2034auk
2034aul
2034aum
2034aun
2034auo
2034aup
2034auq
2034aur
2034aus
2034aut
2034auu
2034auv
2034auw
2034aux
2034auy
2034auz
2034ava
2034avb
2034avc
2034avd
2034ave
2034avf
2034avg
2034avh
2034avi
2034avj
2034avk
2034avl
2034avm
2034avn
2034avo
2034avp
2034avq
2034avr
2034avs
2034avt
2034avu
2034avv
2034avw
2034avx
2034avy
2034avz
2034awa
2034awb
2034awc
2034awd
2034awe
2034awf
2034awg
2034awh
2034awi
2034awj
2034awk
2034awl
2034awm
2034awn
2034awo
2034awp
2034awq
2034awr
2034aws
2034awt
2034awu
2034awv
2034aww
2034awx
2034awy
2034awz
2034axa
2034axb
2034axc
2034axd
2034axe
2034axf
2034axg
2034axh
2034axi
2034axj
2034axk
2034axl
2034axm
2034axn
2034axo
2034axp
2034axq
2034axr
2034axs
2034axt
2034axu
2034axv
2034axw
2034axx
2034axy
2034axz
2034aya
2034ayb
2034ayc
2034ayd
2034aye
2034ayf
2034ayg
2034ayh
2034ayi
2034ayj
2034ayk
2034ayl
2034aym
2034ayn
2034ayo
2034ayp
2034ayq
2034ayr
2034ays
2034ayt
2034ayu
2034ayv
2034ayw
2034ayx
2034ayy
2034ayz
2034aza
2034azb
2034azc
2034azd
2034aze
2034azf
2034azg
2034azh
2034azi
2034azj
2034azk
2034azl
2034azm
2034azn
2034azo
2034azp
2034azq
2034azr
2034azs
2034azt
2034azu
2034azv
2034azw
2034azx
2034azy
2034azz
2034baa
2034bab
2034bac
2034bad
2034bae
2034baf
2034bag
2034bah
2034bai
2034baj
2034bak
2034bal
2034bam
2034ban
2034bao
2034bap
2034baq
2034bar
2034bas
2034bat
2034bau
2034bav
2034baw
2034bax
2034bay
2034baz
2034bba
2034bbb
2034bbc
2034bbd
2034bbe
2034bbf
2034bbg
2034bbh
2034bbi
2034bbj
2034bbk
2034bbl
2034bbm
2034bbn
2034bbo
2034bbp
2034bbq
2034bbr
2034bbs
2034bbt
2034bbu
2034bbv
2034bbw
2034bbx
2034bby
2034bbz
2034bca
2034bcb
2034bcc
2034bcd
2034bce
2034bcf
2034bcg
2034bch
2034bci
2034bcj
2034bck
2034bcl
2034bcm
2034bcn
2034bco
2034bcp
2034bcq
2034bcr
2034bcs
2034bct
2034bcu
2034bcv
2034bcw
2034bcx
2034bcy
2034bcz
2034bda
2034bdb
2034bdc
2034bdd
2034bde
2034bdf
2034bdg
2034bdh
2034bdi
2034bdj
2034bdk
2034bdl
2034bdm
2034bdn
2034bdo
2034bdp
2034bdq
2034bdr
2034bds
2034bdt
2034bdu
2034bdv
2034bdw
2034bdx
2034bdy
2034bdz
2034bea
2034beb
2034bec
2034bed
2034bee
2034bef
2034beg
2034beh
2034bei
2034bej
2034bek
2034bel
2034bem
2034ben
2034beo
2034bep
2034beq
2034ber
2034bes
2034bet
2034beu
2034bev
2034bew
2034bex
2034bey
2034bez
2034bfa
2034bfb
2034bfc
2034bfd
2034bfe
2034bff
2034bfg
2034bfh
2034bfi
2034bfj
2034bfk
2034bfl
2034bfm
2034bfn
2034bfo
2034bfp
2034bfq
2034bfr
2034bfs
2034bft
2034bfu
2034bfv
2034bfw
2034bfx
2034bfy
2034bfz
2034bga
2034bgb
2034bgc
2034bgd
2034bge
2034bgf
2034bgg
2034bgh
2034bgi
2034bgj
2034bgk
2034bgl
2034bgm
2034bgn
2034bgo
2034bgp
2034bgq
2034bgr
2034bgs
2034bgt
2034bgu
2034bgv
2034bgw
2034bgx
2034bgy
2034bgz
2034bha
2034bhb
2034bhc
2034bhd
2034bhe
2034bhf
2034bhg
2034bhh
2034bhi
2034bhj
2034bhk
2034bhl
2034bhm
2034bhn
2034bho
2034bhp
2034bhq
2034bhr
2034bhs
2034bht
2034bhu
2034bhv
2034bhw
2034bhx
2034bhy
2034bhz
2034bia
2034bib
2034bic
2034bid
2034bie
2034bif
2034big
2034bih
2034bii
2034bij
2034bik
2034bil
2034bim
2034bin
2034bio
2034bip
2034biq
2034bir
2034bis
2034bit
2034biu
2034biv
2034biw
2034bix
2034biy
2034biz
2034bja
2034bjb
2034bjc
2034bjd
2034bje
2034bjf
2034bjg
2034bjh
2034bji
2034bjj
2034bjk
2034bjl
2034bjm
2034bjn
2034bjo
2034bjp
2034bjq
2034bjr
2034bjs
2034bjt
2034bju
2034bjv
2034bjw
2034bjx
2034bjy
2034bjz
2034bka
2034bkb
2034bkc
2034bkd
2034bke
2034bkf
2034bkg
2034bkh
2034bki
2034bkj
2034bkk
2034bkl
2034bkm
2034bkn
2034bko
2034bkp
2034bkq
2034bkr
2034bks
2034bkt
2034bku
2034bkv
2034bkw
2034bkx
2034bky
2034bkz
2034bla
2034blb
2034blc
2034bld
2034ble
2034blf
2034blg
2034blh
2034bli
2034blj
2034blk
2034bll
2034blm
2034bln
2034blo
2034blp
2034blq
2034blr
2034bls
2034blt
2034blu
2034blv
2034blw
2034blx
2034bly
2034blz
2034bma
2034bmb
2034bmc
2034bmd
2034bme
2034bmf
2034bmg
2034bmh
2034bmi
2034bmj
2034bmk
2034bml
2034bmm
2034bmn
2034bmo
2034bmp
2034bmq
2034bmr
2034bms
2034bmt
2034bmu
2034bmv
2034bmw
2034bmx
2034bmy
2034bmz
2034bna
2034bnb
2034bnc
2034bnd
2034bne
2034bnf
2034bng
2034bnh
2034bni
2034bnj
2034bnk
2034bnl
2034bnm
2034bnn
2034bno
2034bnp
2034bnq
2034bnr
2034bns
2034bnt
2034bnu
2034bnv
2034bnw
2034bnx
2034bny
2034bnz
2034boa
2034bob
2034boc
2034bod
2034boe
2034bof
2034bog
2034boh
2034boi
2034boj
2034bok
2034bol
2034bom
2034bon
2034boo
2034bop
2034boq
2034bor
2034bos
2034bot
2034bou
2034bov
2034bow
2034box
2034boy
2034boz
2034bpa
2034bpb
2034bpc
2034bpd
2034bpe
2034bpf
2034bpg
2034bph
2034bpi
2034bpj
2034bpk
2034bpl
2034bpm
2034bpn
2034bpo
2034bpp
2034bpq
2034bpr
2034bps
2034bpt
2034bpu
2034bpv
2034bpw
2034bpx
2034bpy
2034bpz
2034bqa
2034bqb
2034bqc
2034bqd
2034bqe
2034bqf
2034bqg
2034bqh
2034bqi
2034bqj
2034bqk
2034bql
2034bqm
2034bqn
2034bqo
2034bqp
2034bqq
2034bqr
2034bqs
2034bqt
2034bqu
2034bqv
2034bqw
2034bqx
2034bqy
2034bqz
2034bra
2034brb
2034brc
2034brd
2034bre
2034brf
2034brg
2034brh
2034bri
2034brj
2034brk
2034brl
2034brm
2034brn
2034bro
2034brp
2034brq
2034brr
2034brs
2034brt
2034bru
2034brv
2034brw
2034brx
2034bry
2034brz
2034bsa
2034bsb
2034bsc
2034bsd
2034bse
2034bsf
2034bsg
2034bsh
2034bsi
2034bsj
2034bsk
2034bsl
2034bsm
2034bsn
2034bso
2034bsp
2034bsq
2034bsr
2034bss
2034bst
2034bsu
2034bsv
2034bsw
2034bsx
2034bsy
2034bsz
2034bta
2034btb
2034btc
2034btd
2034bte
2034btf
2034btg
2034bth
2034bti
2034btj
2034btk
2034btl
2034btm
2034btn
2034bto
2034btp
2034btq
2034btr
2034bts
2034btt
2034btu
2034btv
2034btw
2034btx
2034bty
2034btz
2034bua
2034bub
2034buc
2034bud
2034bue
2034buf
2034bug
2034buh
2034bui
2034buj
2034buk
2034bul
2034bum
2034bun
2034buo
2034bup
2034buq
2034bur
2034bus
2034but
2034buu
2034buv
2034buw
2034bux
2034buy
2034buz
2034bva
2034bvb
2034bvc
2034bvd
2034bve
2034bvf
2034bvg
2034bvh
2034bvi
2034bvj
2034bvk
2034bvl
2034bvm
2034bvn
2034bvo
2034bvp
2034bvq
2034bvr
2034bvs
2034bvt
2034bvu
2034bvv
2034bvw
2034bvx
2034bvy
2034bvz
2034bwa
2034bwb
2034bwc
2034bwd
2034bwe
2034bwf
2034bwg
2034bwh
2034bwi
2034bwj
2034bwk
2034bwl
2034bwm
2034bwn
2034bwo
2034bwp
2034bwq
2034bwr
2034bws
2034bwt
2034bwu
2034bwv
2034bww
2034bwx
2034bwy
2034bwz
2034bxa
2034bxb
2034bxc
2034bxd
2034bxe
2034bxf
2034bxg
2034bxh
2034bxi
2034bxj
2034bxk
2034bxl
2034bxm
2034bxn
2034bxo
2034bxp
2034bxq
2034bxr
2034bxs
2034bxt
2034bxu
2034bxv
2034bxw
2034bxx
2034bxy
2034bxz
2034bya
2034byb
2034byc
2034byd
2034bye
2034byf
2034byg
2034byh
2034byi
2034byj
2034byk
2034byl
2034bym
2034byn
2034byo
2034byp
2034byq
2034byr
2034bys
2034byt
2034byu
2034byv
2034byw
2034byx
2034byy
2034byz
2034bza
2034bzb
2034bzc
2034bzd
2034bze
2034bzf
2034bzg
2034bzh
2034bzi
2034bzj
2034bzk
2034bzl
2034bzm
2034bzn
2034bzo
2034bzp
2034bzq
2034bzr
2034bzs
2034bzt
2034bzu
2034bzv
2034bzw
2034bzx
2034bzy
2034bzz
2034caa
2034cab
2034cac
2034cad
2034cae
2034caf
2034cag
2034cah
2034cai
2034caj
2034cak
2034cal
2034cam
2034can
2034cao
2034cap
2034caq
2034car
2034cas
2034cat
2034cau
2034cav
2034caw
2034cax
2034cay
2034caz
2034cba
2034cbb
2034cbc
2034cbd
2034cbe
2034cbf
2034cbg
2034cbh
2034cbi
2034cbj
2034cbk
2034cbl
2034cbm
2034cbn
2034cbo
2034cbp
2034cbq
2034cbr
2034cbs
2034cbt
2034cbu
2034cbv
2034cbw
2034cbx
2034cby
2034cbz
2034cca
2034ccb
2034ccc
2034ccd
2034cce
2034ccf
2034ccg
2034cch
2034cci
2034ccj
2034cck
2034ccl
2034ccm
2034ccn
2034cco
2034ccp
2034ccq
2034ccr
2034ccs
2034cct
2034ccu
2034ccv
2034ccw
2034ccx
2034ccy
2034ccz
2034cda
2034cdb
2034cdc
2034cdd
2034cde
2034cdf
2034cdg
2034cdh
2034cdi
2034cdj
2034cdk
2034cdl
2034cdm
2034cdn
2034cdo
2034cdp
2034cdq
2034cdr
2034cds
2034cdt
2034cdu
2034cdv
2034cdw
2034cdx
2034cdy
2034cdz
2034cea
2034ceb
2034cec
2034ced
2034cee
2034cef
2034ceg
2034ceh
2034cei
2034cej
2034cek
2034cel
2034cem
2034cen
2034ceo
2034cep
2034ceq
2034cer
2034ces
2034cet
2034ceu
2034cev
2034cew
2034cex
2034cey
2034cez
2034cfa
2034cfb
2034cfc
2034cfd
2034cfe
2034cff
2034cfg
2034cfh
2034cfi
2034cfj
2034cfk
2034cfl
2034cfm
2034cfn
2034cfo
2034cfp
2034cfq
2034cfr
2034cfs
2034cft
2034cfu
2034cfv
2034cfw
2034cfx
2034cfy
2034cfz
2034cga
2034cgb
2034cgc
2034cgd
2034cge
2034cgf
2034cgg
2034cgh
2034cgi
2034cgj
2034cgk
2034cgl
2034cgm
2034cgn
2034cgo
2034cgp
2034cgq
2034cgr
2034cgs
2034cgt
2034cgu
2034cgv
2034cgw
2034cgx
2034cgy
2034cgz
2034cha
2034chb
2034chc
2034chd
2034che
2034chf
2034chg
2034chh
2034chi
2034chj
2034chk
2034chl
2034chm
2034chn
2034cho
2034chp
2034chq
2034chr
2034chs
2034cht
2034chu
2034chv
2034chw
2034chx
2034chy
2034chz
2034cia
2034cib
2034cic
2034cid
2034cie
2034cif
2034cig
2034cih
2034cii
2034cij
2034cik
2034cil
2034cim
2034cin
2034cio
2034cip
2034ciq
2034cir
2034cis
2034cit
2034ciu
2034civ
2034ciw
2034cix
2034ciy
2034ciz
2034cja
2034cjb
2034cjc
2034cjd
2034cje
2034cjf
2034cjg
2034cjh
2034cji
2034cjj
2034cjk
2034cjl
2034cjm
2034cjn
2034cjo
2034cjp
2034cjq
2034cjr
2034cjs
2034cjt
2034cju
2034cjv
2034cjw
2034cjx
2034cjy
2034cjz
2034cka
2034ckb
2034ckc
2034ckd
2034cke
2034ckf
2034ckg
2034ckh
2034cki
2034ckj
2034ckk
2034ckl
2034ckm
2034ckn
2034cko
2034ckp
2034ckq
2034ckr
2034cks
2034ckt
2034cku
2034ckv
2034ckw
2034ckx
2034cky
2034ckz
2034cla
2034clb
2034clc
2034cld
2034cle
2034clf
2034clg
2034clh
2034cli
2034clj
2034clk
2034cll
2034clm
2034cln
2034clo
2034clp
2034clq
2034clr
2034cls
2034clt
2034clu
2034clv
2034clw
2034clx
2034cly
2034clz
2034cma
2034cmb
2034cmc
2034cmd
2034cme
2034cmf
2034cmg
2034cmh
2034cmi
2034cmj
2034cmk
2034cml
2034cmm
2034cmn
2034cmo
2034cmp
2034cmq
2034cmr
2034cms
2034cmt
2034cmu
2034cmv
2034cmw
2034cmx
2034cmy
2034cmz
2034cna
2034cnb
2034cnc
2034cnd
2034cne
2034cnf
2034cng
2034cnh
2034cni
2034cnj
2034cnk
2034cnl
2034cnm
2034cnn
2034cno
2034cnp
2034cnq
2034cnr
2034cns
2034cnt
2034cnu
2034cnv
2034cnw
2034cnx
2034cny
2034cnz
2034coa
2034cob
2034coc
2034cod
2034coe
2034cof
2034cog
2034coh
2034coi
2034coj
2034cok
2034col
2034com
2034con
2034coo
2034cop
2034coq
2034cor
2034cos
2034cot
2034cou
2034cov
2034cow
2034cox
2034coy
2034coz
2034cpa
2034cpb
2034cpc
2034cpd
2034cpe
2034cpf
2034cpg
2034cph
2034cpi
2034cpj
2034cpk
2034cpl
2034cpm
2034cpn
2034cpo
2034cpp
2034cpq
2034cpr
2034cps
2034cpt
2034cpu
2034cpv
2034cpw
2034cpx
2034cpy
2034cpz
2034cqa
2034cqb
2034cqc
2034cqd
2034cqe
2034cqf
2034cqg
2034cqh
2034cqi
2034cqj
2034cqk
2034cql
2034cqm
2034cqn
2034cqo
2034cqp
2034cqq
2034cqr
2034cqs
2034cqt
2034cqu
2034cqv
2034cqw
2034cqx
2034cqy
2034cqz
2034cra
2034crb
2034crc
2034crd
2034cre
2034crf
2034crg
2034crh
2034cri
2034crj
2034crk
2034crl
2034crm
2034crn
2034cro
2034crp
2034crq
2034crr
2034crs
2034crt
2034cru
2034crv
2034crw
2034crx
2034cry
2034crz
2034csa
2034csb
2034csc
2034csd
2034cse
2034csf
2034csg
2034csh
2034csi
2034csj
2034csk
2034csl
2034csm
2034csn
2034cso
2034csp
2034csq
2034csr
2034css
2034cst
2034csu
2034csv
2034csw
2034csx
2034csy
2034csz
2034cta
2034ctb
2034ctc
2034ctd
2034cte
2034ctf
2034ctg
2034cth
2034cti
2034ctj
2034ctk
2034ctl
2034ctm
2034ctn
2034cto
2034ctp
2034ctq
2034ctr
2034cts
2034ctt
2034ctu
2034ctv
2034ctw
2034ctx
2034cty
2034ctz
2034cua
2034cub
2034cuc
2034cud
2034cue
2034cuf
2034cug
2034cuh
2034cui
2034cuj
2034cuk
2034cul
2034cum
2034cun
2034cuo
2034cup
2034cuq
2034cur
2034cus
2034cut
2034cuu
2034cuv
2034cuw
2034cux
2034cuy
2034cuz
2034cva
2034cvb
2034cvc
2034cvd
2034cve
2034cvf
2034cvg
2034cvh
2034cvi
2034cvj
2034cvk
2034cvl
2034cvm
2034cvn
2034cvo
2034cvp
2034cvq
2034cvr
2034cvs
2034cvt
2034cvu
2034cvv
2034cvw
2034cvx
2034cvy
2034cvz
2034cwa
2034cwb
2034cwc
2034cwd
2034cwe
2034cwf
2034cwg
2034cwh
2034cwi
2034cwj
2034cwk
2034cwl
2034cwm
2034cwn
2034cwo
2034cwp
2034cwq
2034cwr
2034cws
2034cwt
2034cwu
2034cwv
2034cww
2034cwx
2034cwy
2034cwz
2034cxa
2034cxb
2034cxc
2034cxd
2034cxe
2034cxf
2034cxg
2034cxh
2034cxi
2034cxj
2034cxk
2034cxl
2034cxm
2034cxn
2034cxo
2034cxp
2034cxq
2034cxr
2034cxs
2034cxt
2034cxu
2034cxv
2034cxw
2034cxx
2034cxy
2034cxz
2034cya
2034cyb
2034cyc
2034cyd
2034cye
2034cyf
2034cyg
2034cyh
2034cyi
2034cyj
2034cyk
2034cyl
2034cym
2034cyn
2034cyo
2034cyp
2034cyq
2034cyr
2034cys
2034cyt
2034cyu
2034cyv
2034cyw
2034cyx
2034cyy
2034cyz
2034cza
2034czb
2034czc
2034czd
2034cze
2034czf
2034czg
2034czh
2034czi
2034czj
2034czk
2034czl
2034czm
2034czn
2034czo
2034czp
2034czq
2034czr
2034czs
2034czt
2034czu
2034czv
2034czw
2034czx
2034czy
2034czz
2034daa
2034dab
2034dac
2034dad
2034dae
2034daf
2034dag
2034dah
2034dai
2034daj
2034dak
2034dal
2034dam
2034dan
2034dao
2034dap
2034daq
2034dar
2034das
2034dat
2034dau
2034dav
2034daw
2034dax
2034day
2034daz
2034dba
2034dbb
2034dbc
2034dbd
2034dbe
2034dbf
2034dbg
2034dbh
2034dbi
2034dbj
2034dbk
2034dbl
2034dbm
2034dbn
2034dbo
2034dbp
2034dbq
2034dbr
2034dbs
2034dbt
2034dbu
2034dbv
2034dbw
2034dbx
2034dby
2034dbz
2034dca
2034dcb
2034dcc
2034dcd
2034dce
2034dcf
2034dcg
2034dch
2034dci
2034dcj
2034dck
2034dcl
2034dcm
2034dcn
2034dco
2034dcp
2034dcq
2034dcr
2034dcs
2034dct
2034dcu
2034dcv
2034dcw
2034dcx
2034dcy
2034dcz
2034dda
2034ddb
2034ddc
2034ddd
2034dde
2034ddf
2034ddg
2034ddh
2034ddi
2034ddj
2034ddk
2034ddl
2034ddm
2034ddn
2034ddo
2034ddp
2034ddq
2034ddr
2034dds
2034ddt
2034ddu
2034ddv
2034ddw
2034ddx
2034ddy
2034ddz
2034dea
2034deb
2034dec
2034ded
2034dee
2034def
2034deg
2034deh
2034dei
2034dej
2034dek
2034del
2034dem
2034den
2034deo
2034dep
2034deq
2034der
2034des
2034det
2034deu
2034dev
2034dew
2034dex
2034dey
2034dez
2034dfa
2034dfb
2034dfc
2034dfd
2034dfe
2034dff
2034dfg
2034dfh
2034dfi
2034dfj
2034dfk
2034dfl
2034dfm
2034dfn
2034dfo
2034dfp
2034dfq
2034dfr
2034dfs
2034dft
2034dfu
2034dfv
2034dfw
2034dfx
2034dfy
2034dfz
2034dga
2034dgb
2034dgc
2034dgd
2034dge
2034dgf
2034dgg
2034dgh
2034dgi
2034dgj
2034dgk
2034dgl
2034dgm
2034dgn
2034dgo
2034dgp
2034dgq
2034dgr
2034dgs
2034dgt
2034dgu
2034dgv
2034dgw
2034dgx
2034dgy
2034dgz
2034dha
2034dhb
2034dhc
2034dhd
2034dhe
2034dhf
2034dhg
2034dhh
2034dhi
2034dhj
2034dhk
2034dhl
2034dhm
2034dhn
2034dho
2034dhp
2034dhq
2034dhr
2034dhs
2034dht
2034dhu
2034dhv
2034dhw
2034dhx
2034dhy
2034dhz
2034dia
2034dib
2034dic
2034did
2034die
2034dif
2034dig
2034dih
2034dii
2034dij
2034dik
2034dil
2034dim
2034din
2034dio
2034dip
2034diq
2034dir
2034dis
2034dit
2034diu
2034div
2034diw
2034dix
2034diy
2034diz
2034dja
2034djb
2034djc
2034djd
2034dje
2034djf
2034djg
2034djh
2034dji
2034djj
2034djk
2034djl
2034djm
2034djn
2034djo
2034djp
2034djq
2034djr
2034djs
2034djt
2034dju
2034djv
2034djw
2034djx
2034djy
2034djz

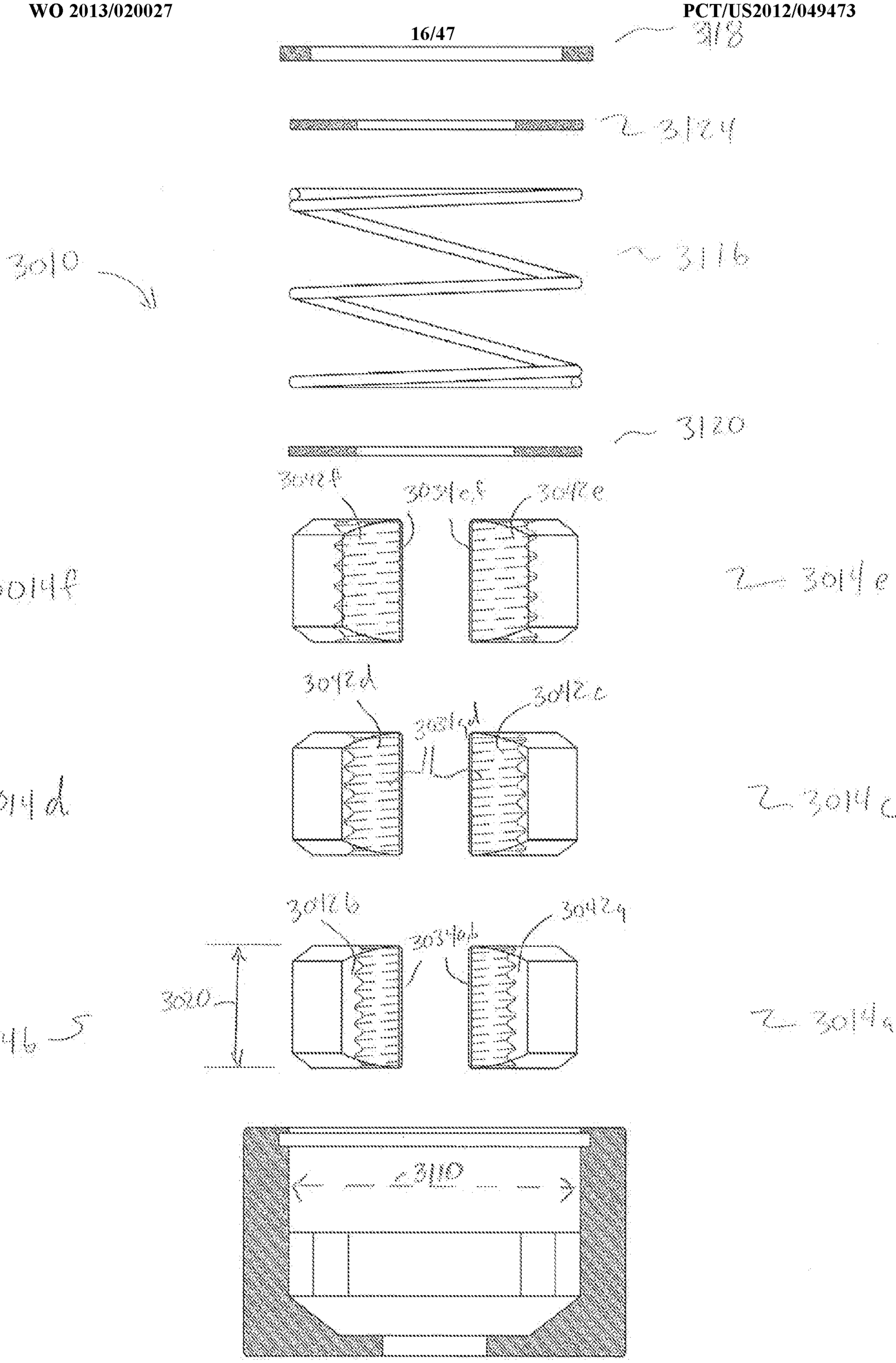
3018
3124
3116
3010
3120
3014f
3012f
3012e
3014e
3014d
3012d
3014c
3012b
3012a
3014b
3020
3014a
3110

FIGURE 16

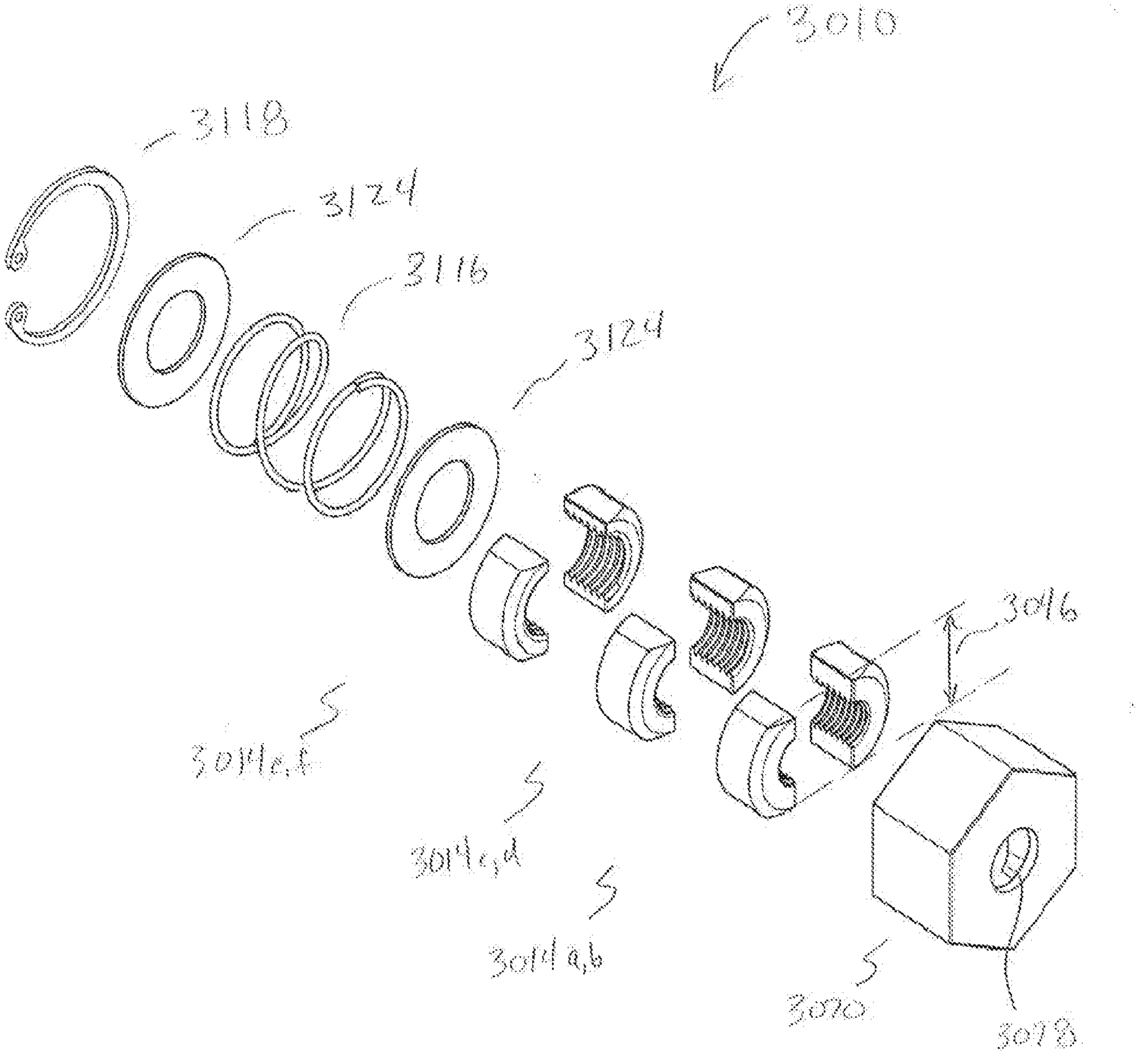
3010
3118
3124
3116
3124
3014e,f
3014c,d
3014a,b
3016
3020
3018

FIGURE 17

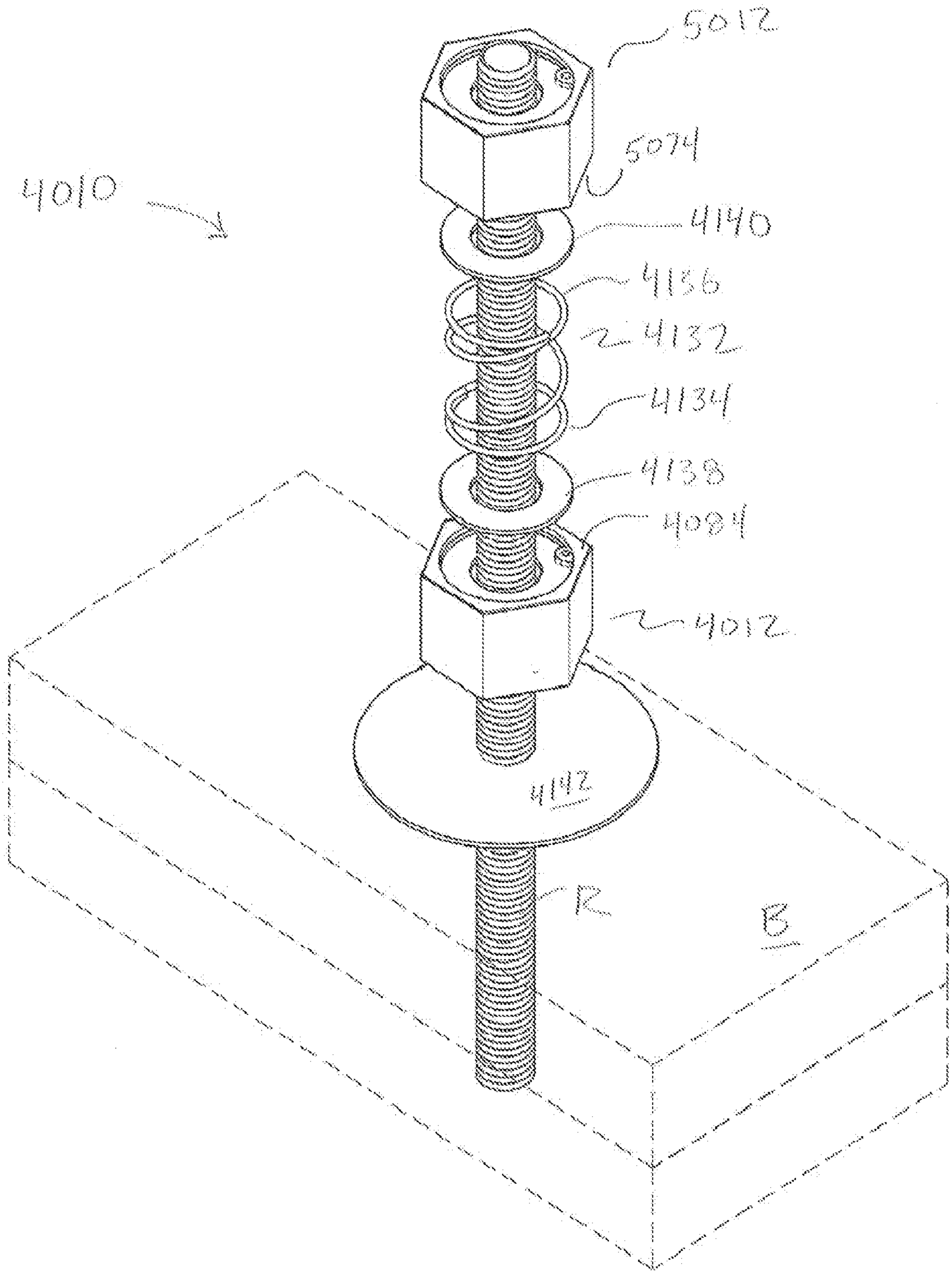

FIGURE 18

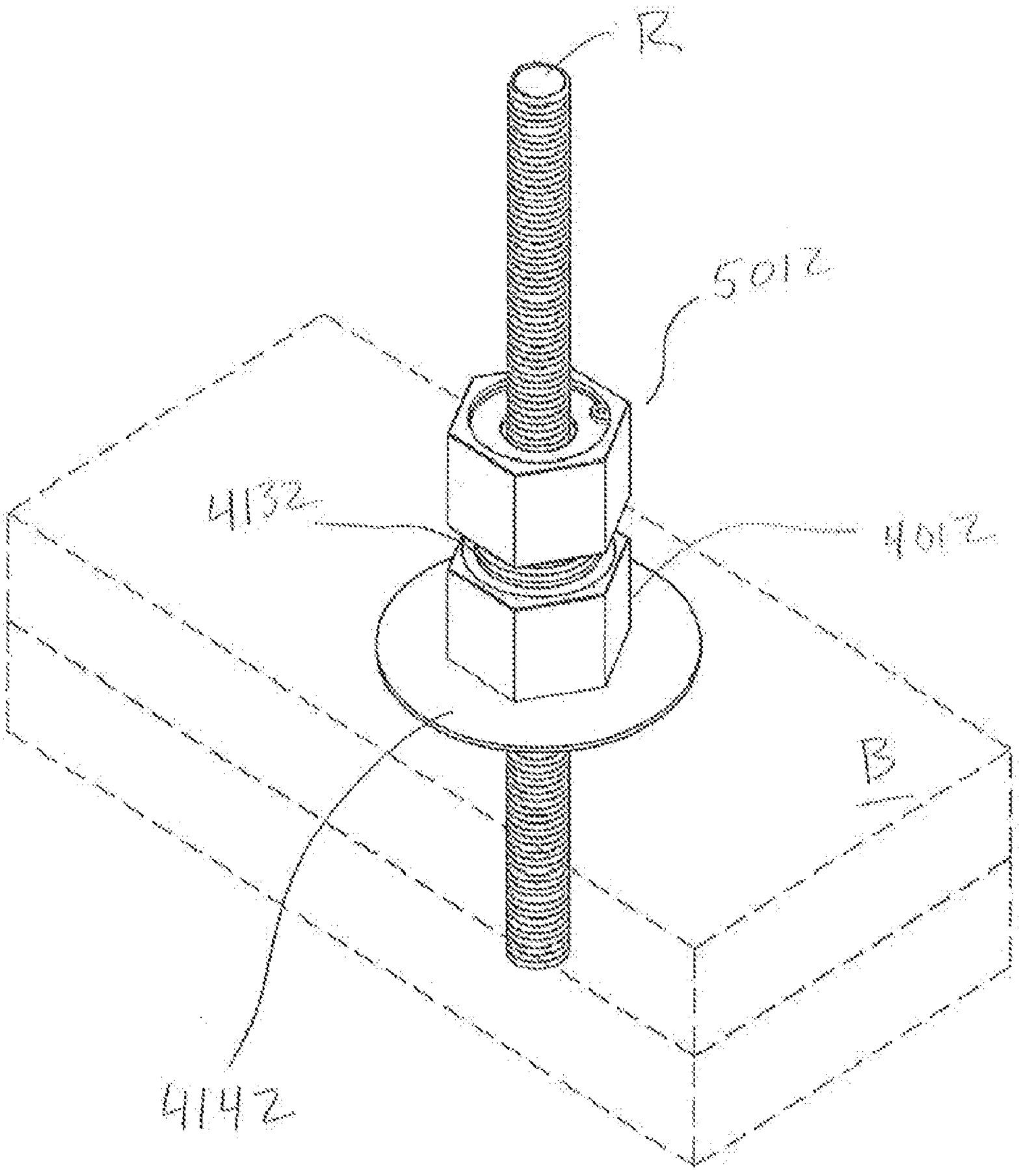

FIGURE 19

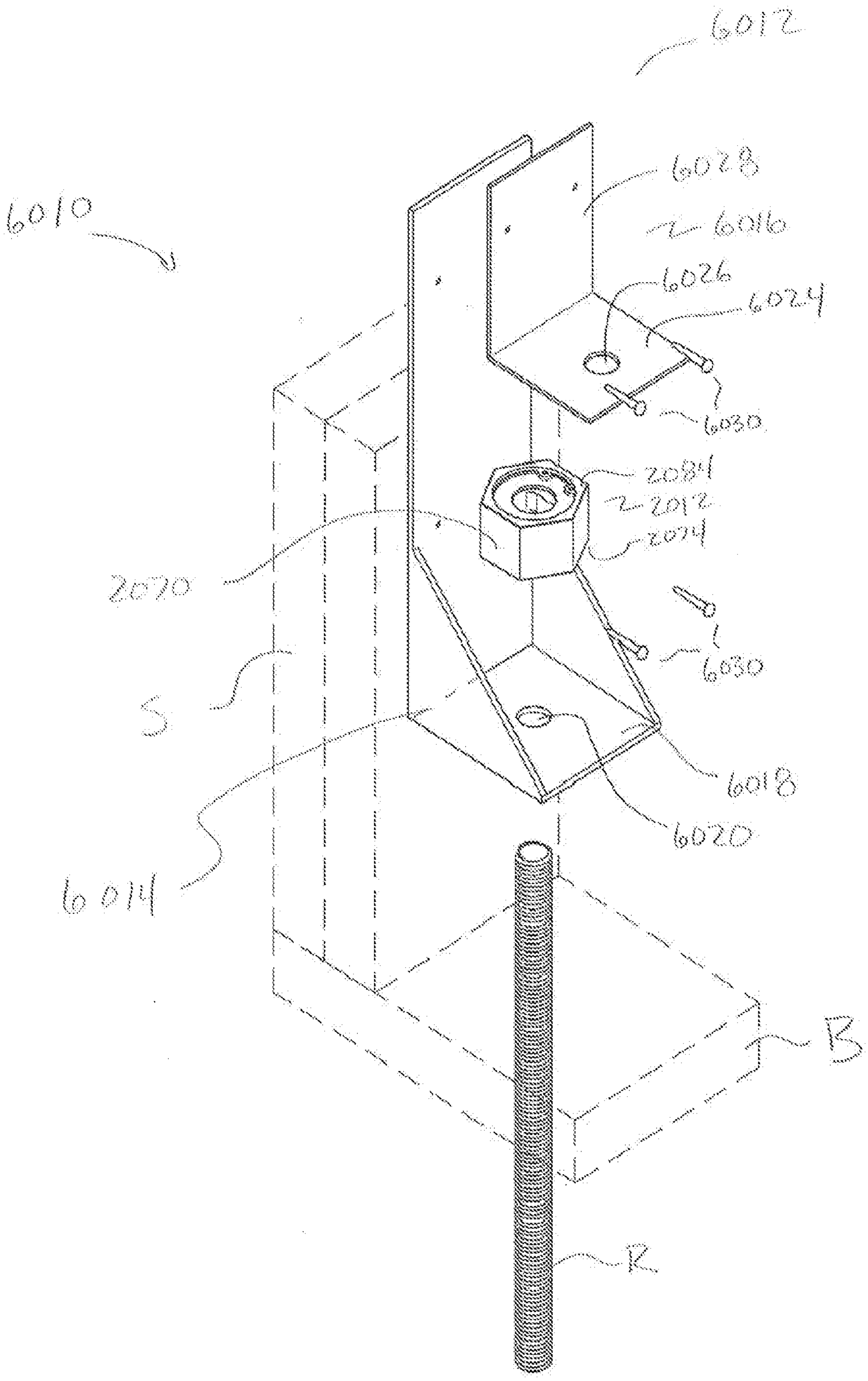
6012
6028
6016
6026
6024
6030
2084
2012
2074
6010
2070
S
6030
6018
6020
6014
B
R

FIGURE 20

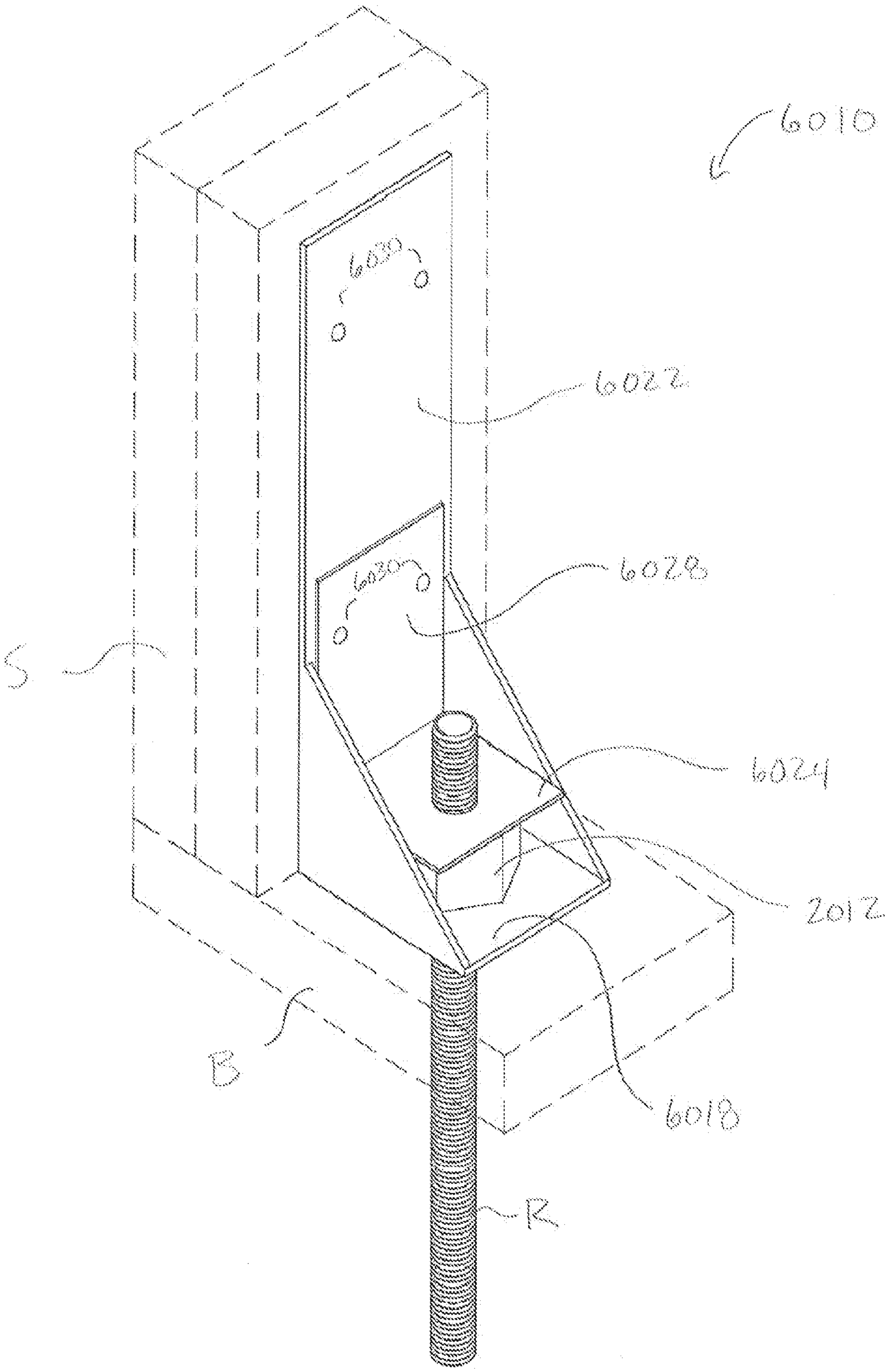

FIGURE 21

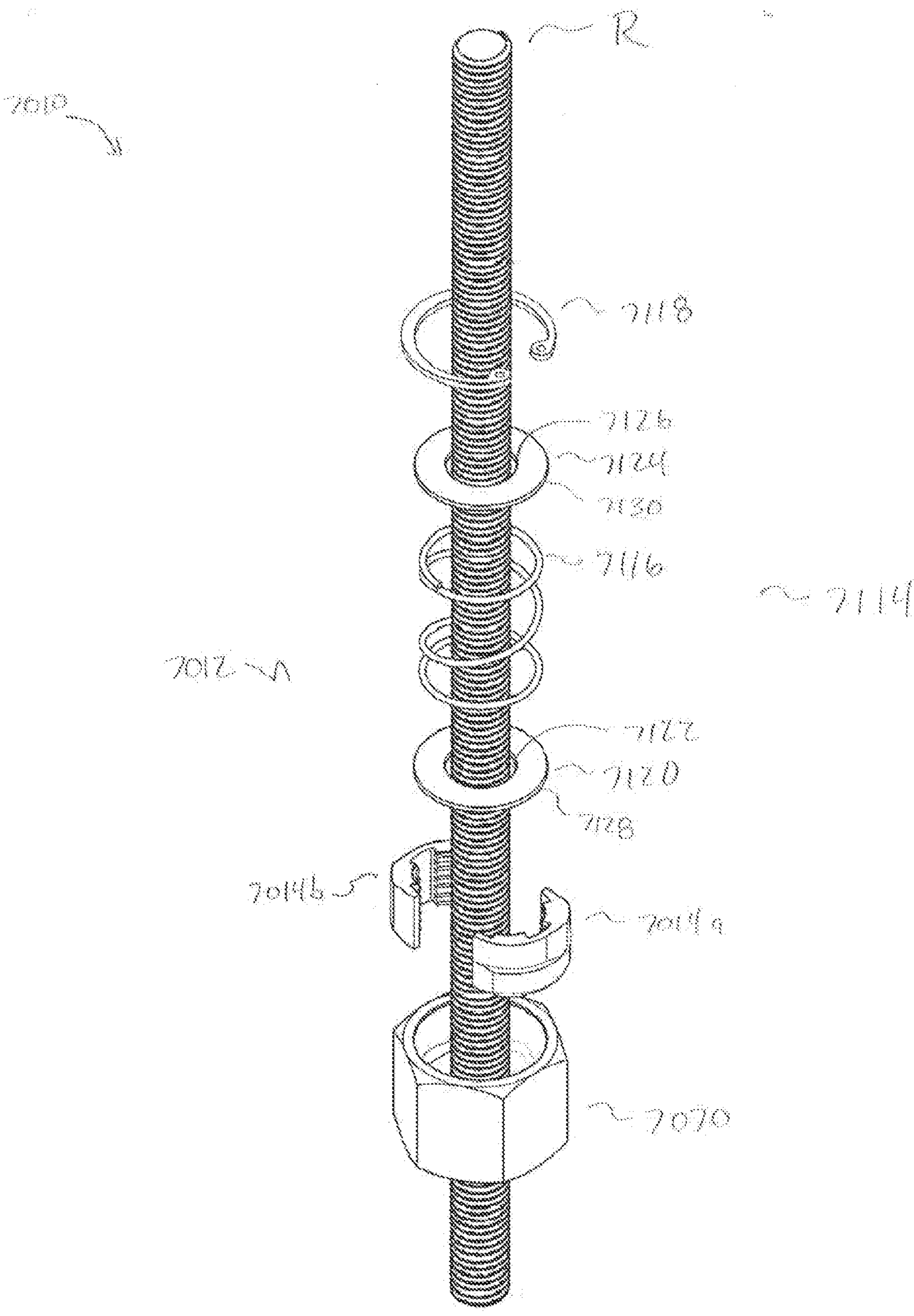
7012
R
7118
7126
7128
7130
7116
7114
7012
7122
7120
7118
7014b
7014a
7070

FIG. 22

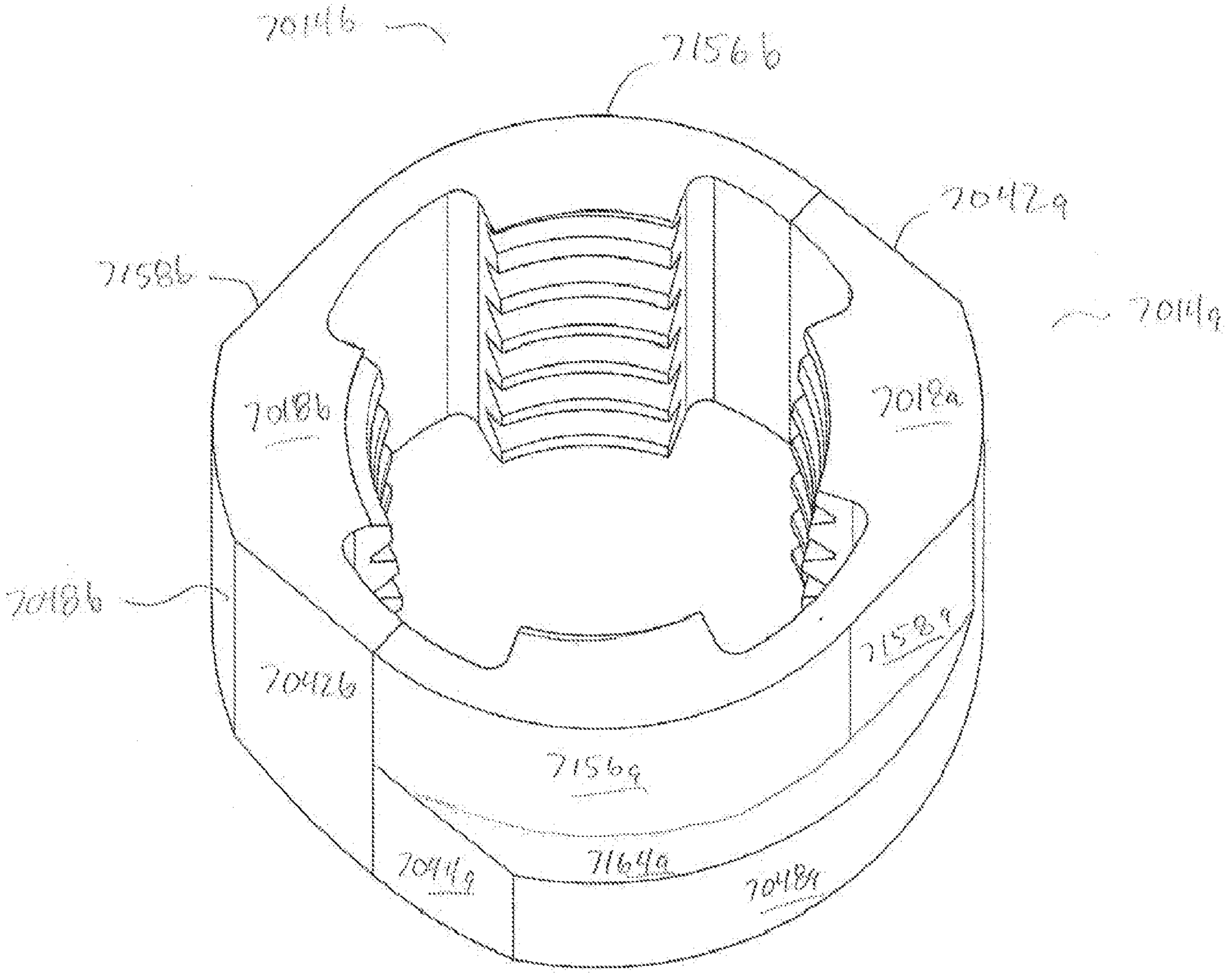
7014b
7156b
7042a
7158b
7014a
7018b
7018a
7018b
7042b
7158a
7156a
7014a
7164a
7018a

FIG. 23

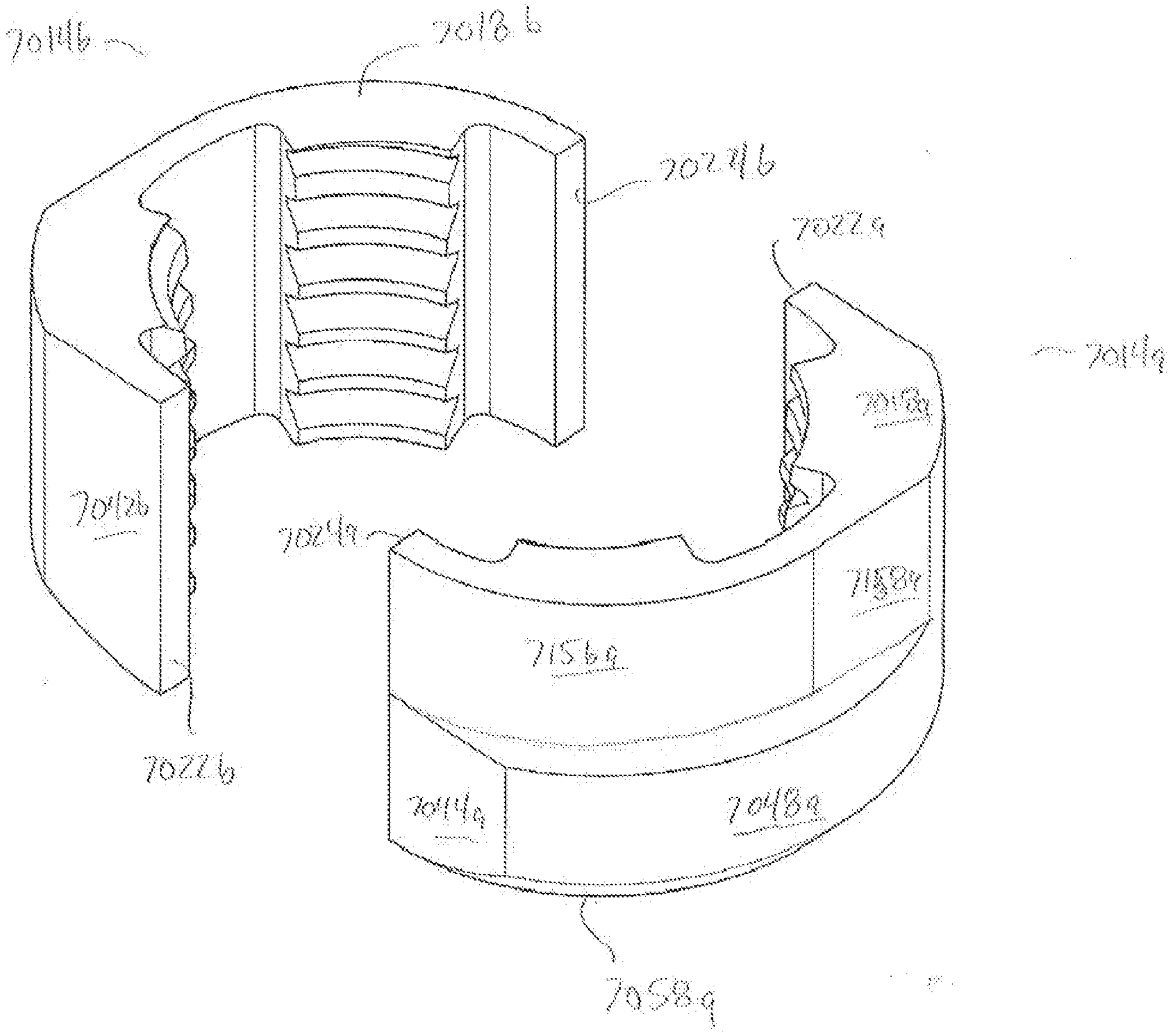
702Lb
702Rb
702Lq
702Rq
704b
704q
706b
706q
708b
708q
710b
710q
712b
712q
714b
714q
715bq
716b
716q
718b
718q
720b
720q
722b
722q
724b
724q
726b
726q
728b
728q

Fig. 24

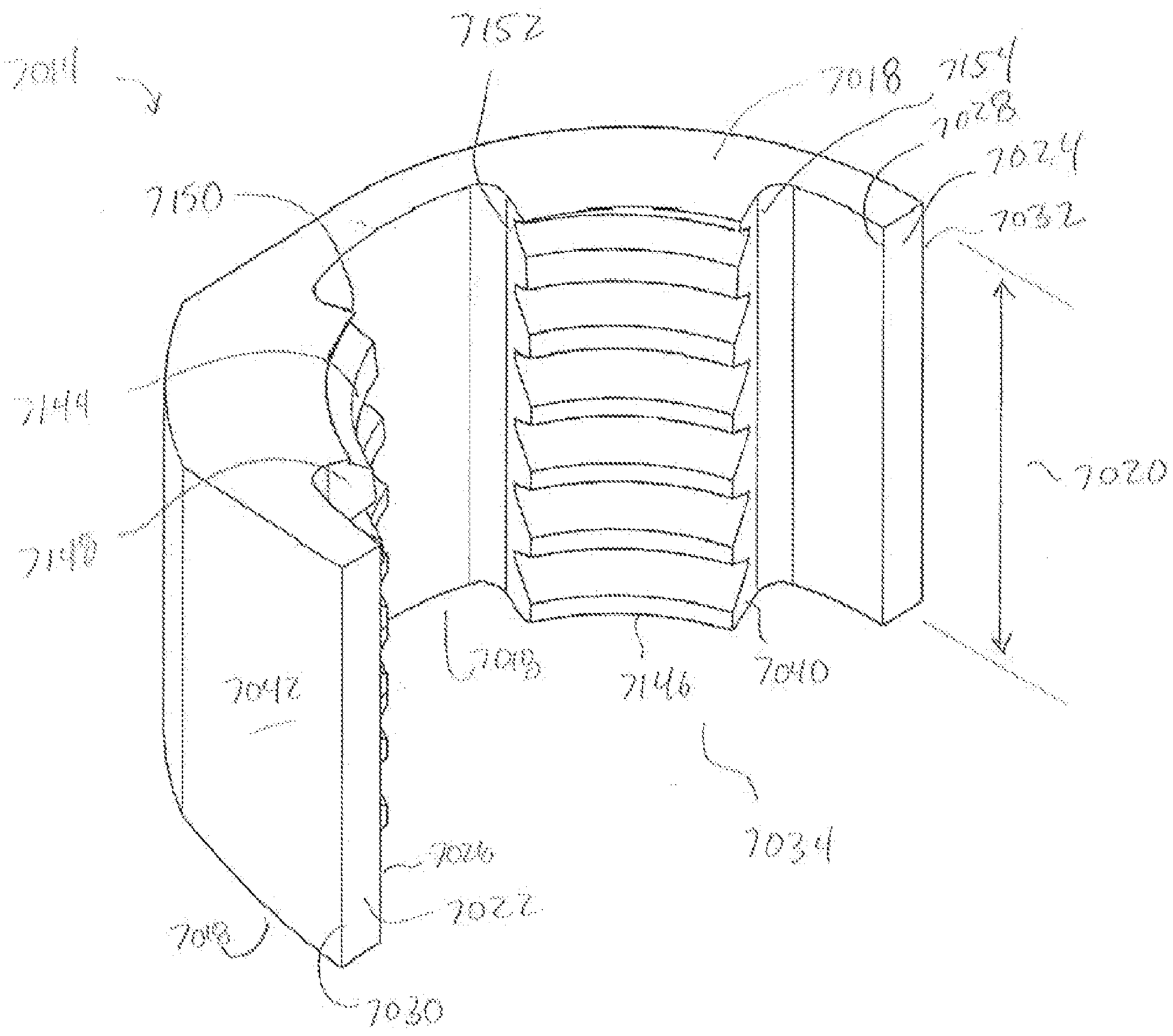
7152
7014
7018
7154
7028
7024
7150
7032
7149
7020
7148
7026
7146
7040
7042
7034
7022
708
7030

FIG. 25

7014

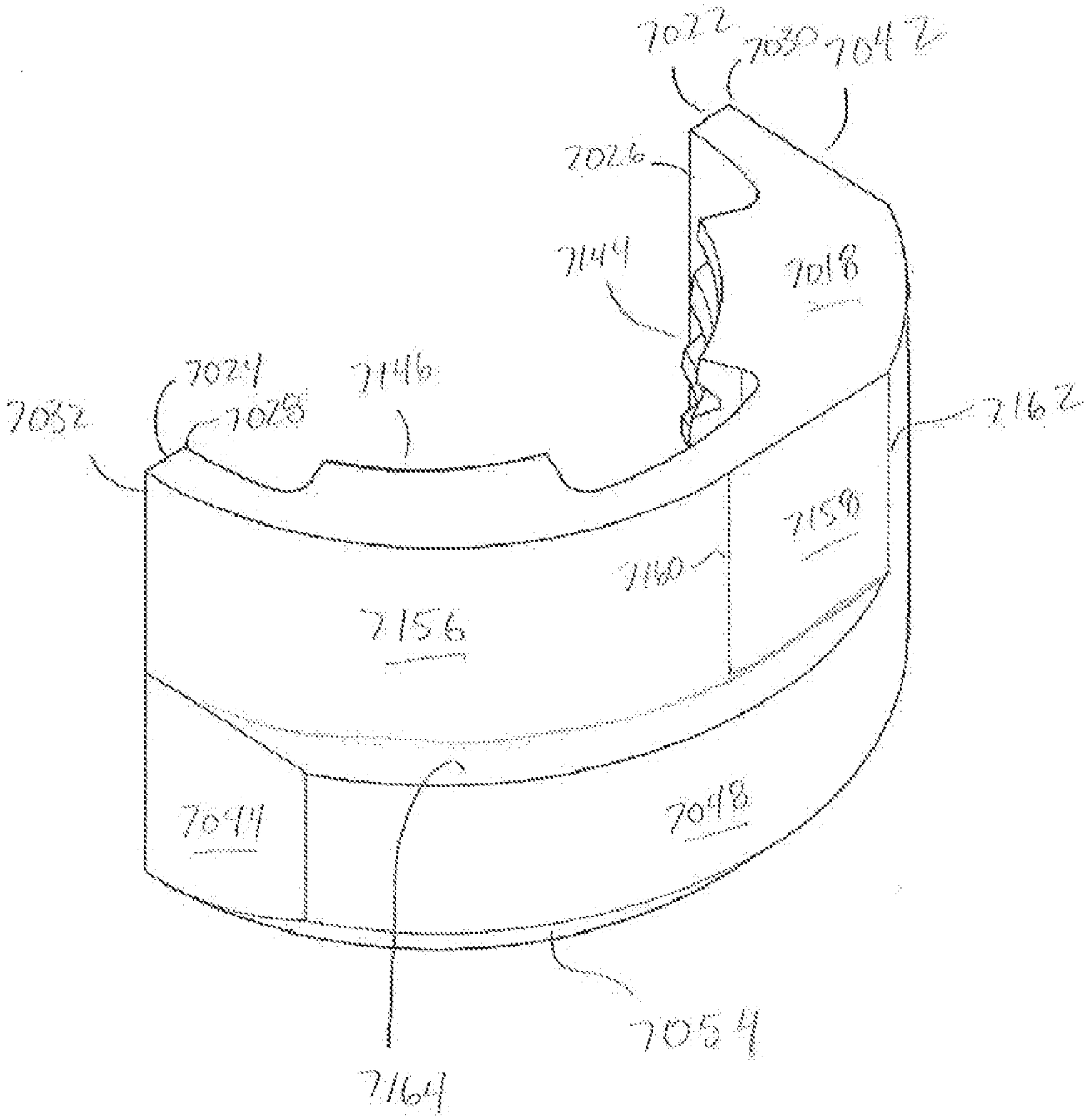
7022
7030
7042
7026
7044
7018
7024
7028
7046
7052
7162
7159
7160
7156
7011
7018
7164
7054

FIG. 26

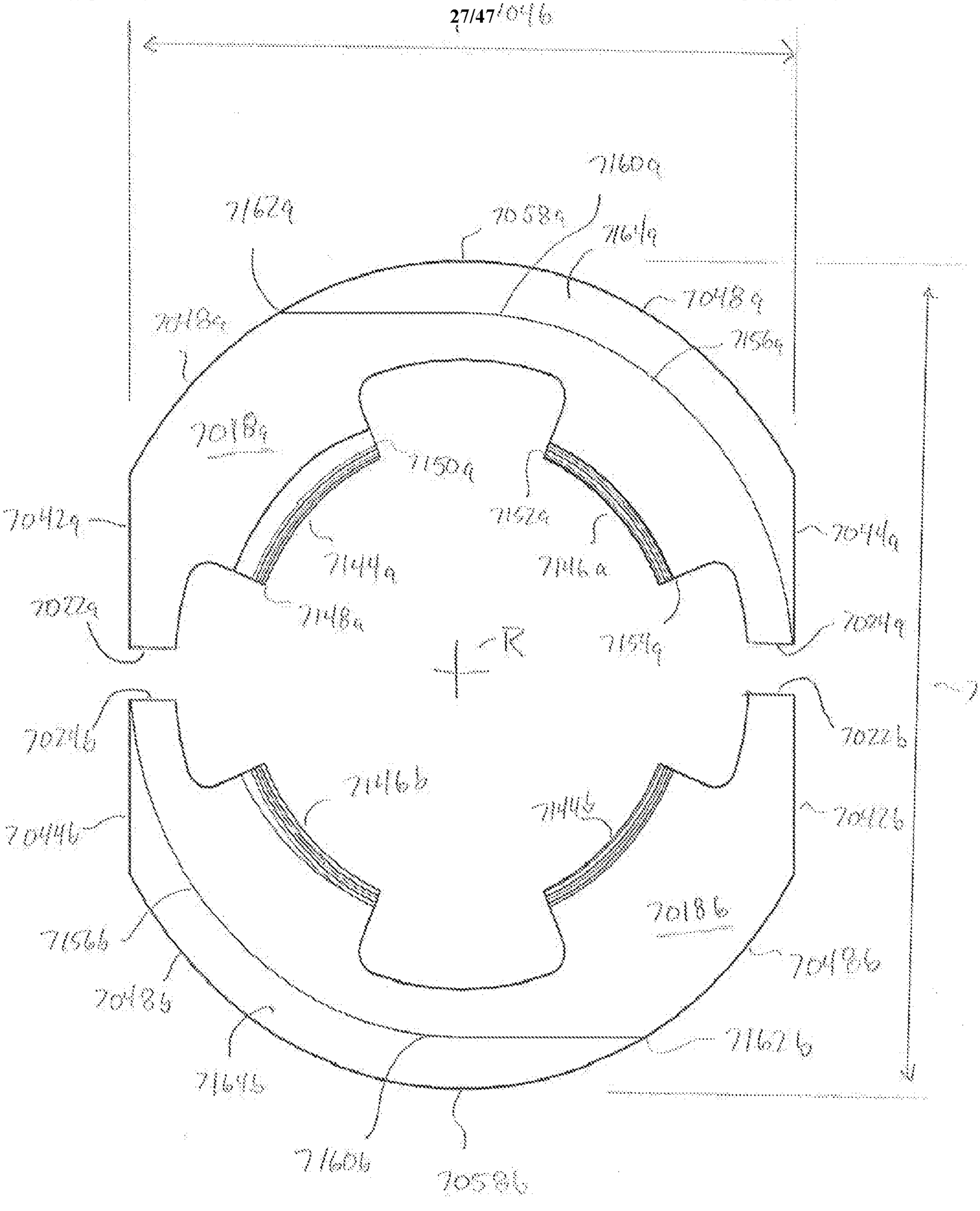
7160a
7058a
7161a
7048a
7156a
7018a
7150a
7042a
7152a
7044a
7144a
7146a
7022a
7148a
7159a
7054a
R
7052
7022b
7146b
7044b
7144b
7145
7042b
7018b
7156b
7018b
7018b
7161b
7164b
7160b
7058b

FIG. 27

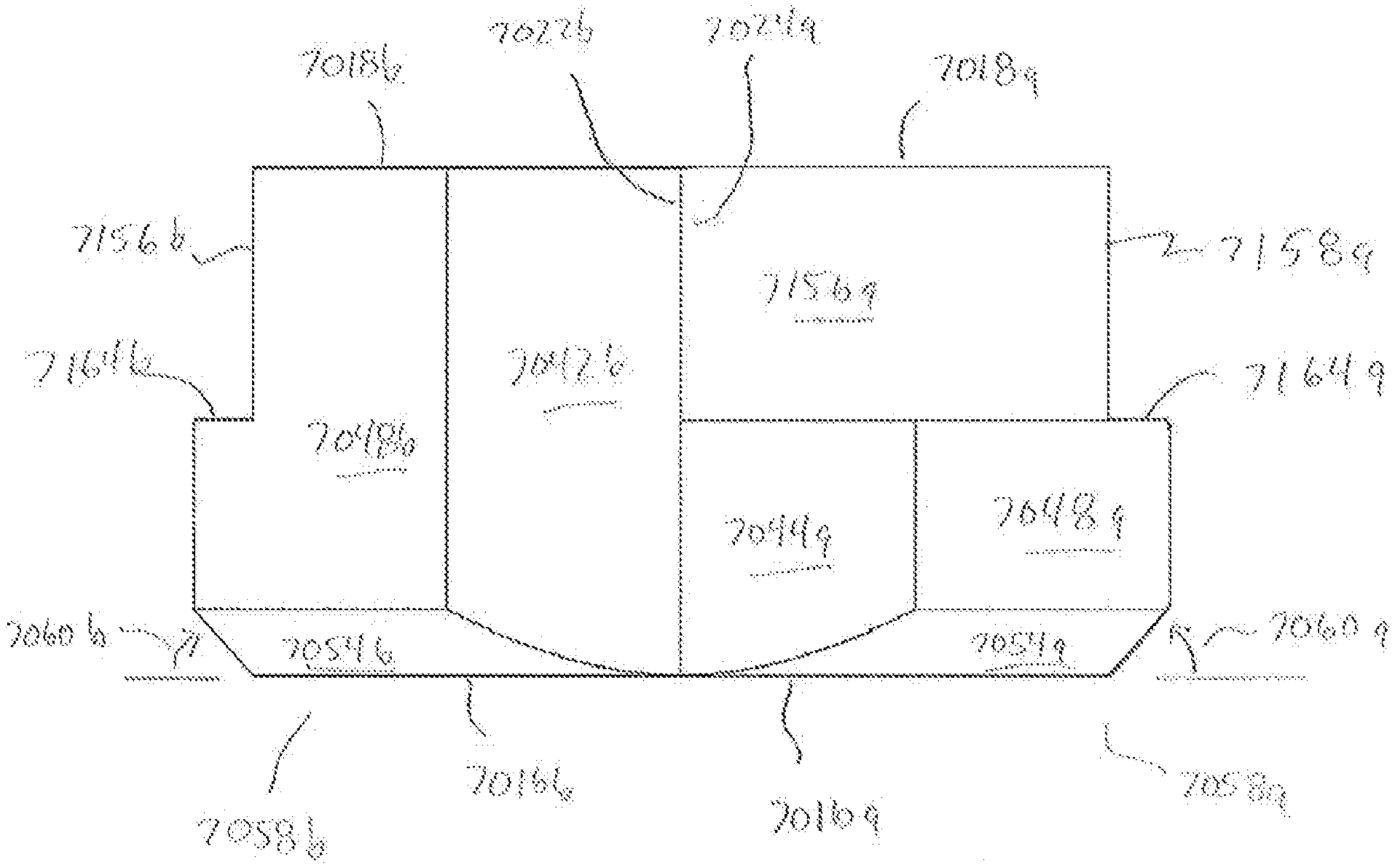
7018b
7022b
7022g
7018g
7156b
7158g
7156g
7164b
7042b
7164g
7048b
7049g
7048g
7060b
7054b
7054g
7060g
7058b
7016b
7016g
7058g

FIG. 28

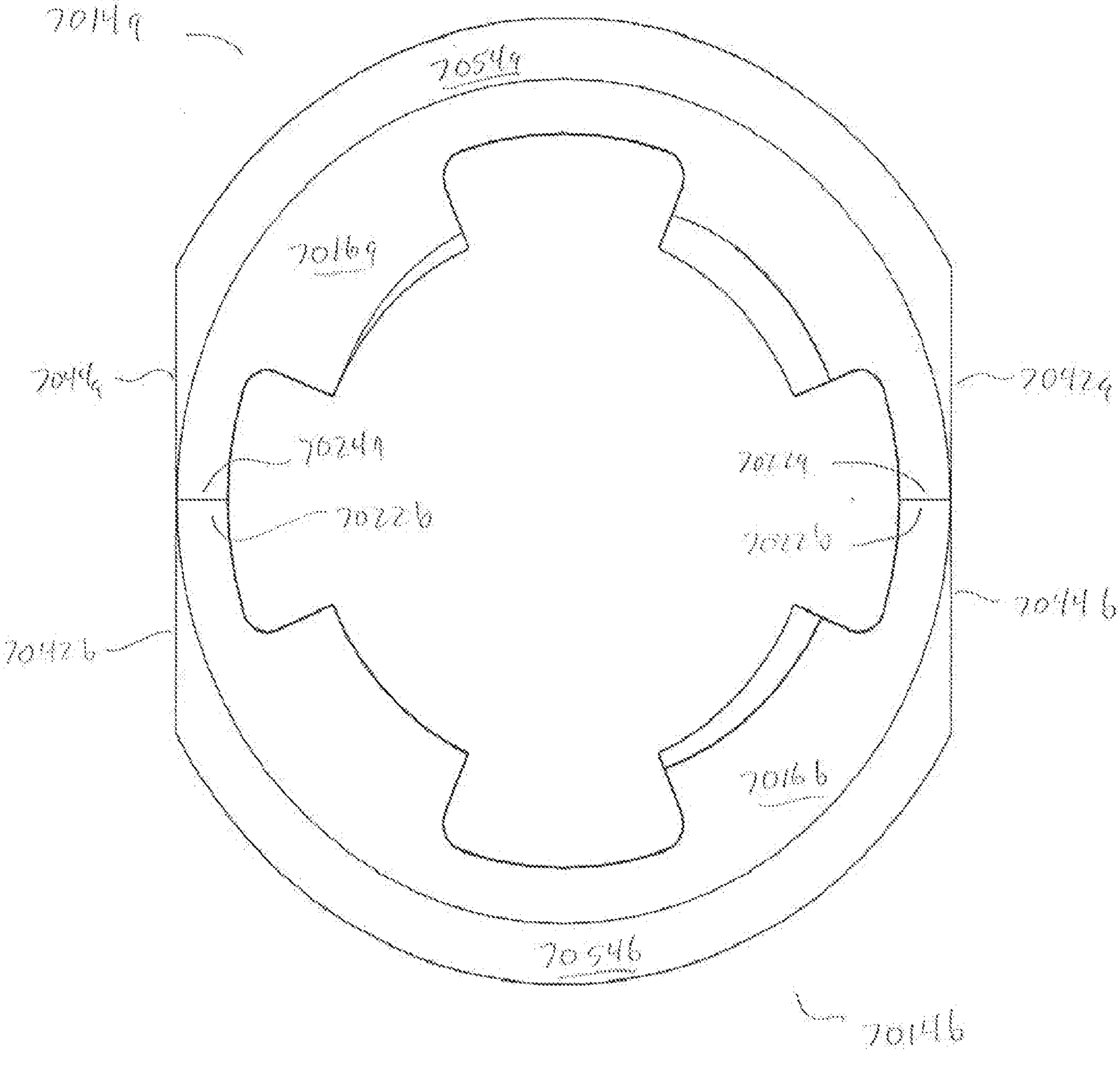
7014a
7054a
7016a
7044a
7024a
7022b
7042b
7024a
7022b
7014b
7016b
7054b
7014b

Fig. 29

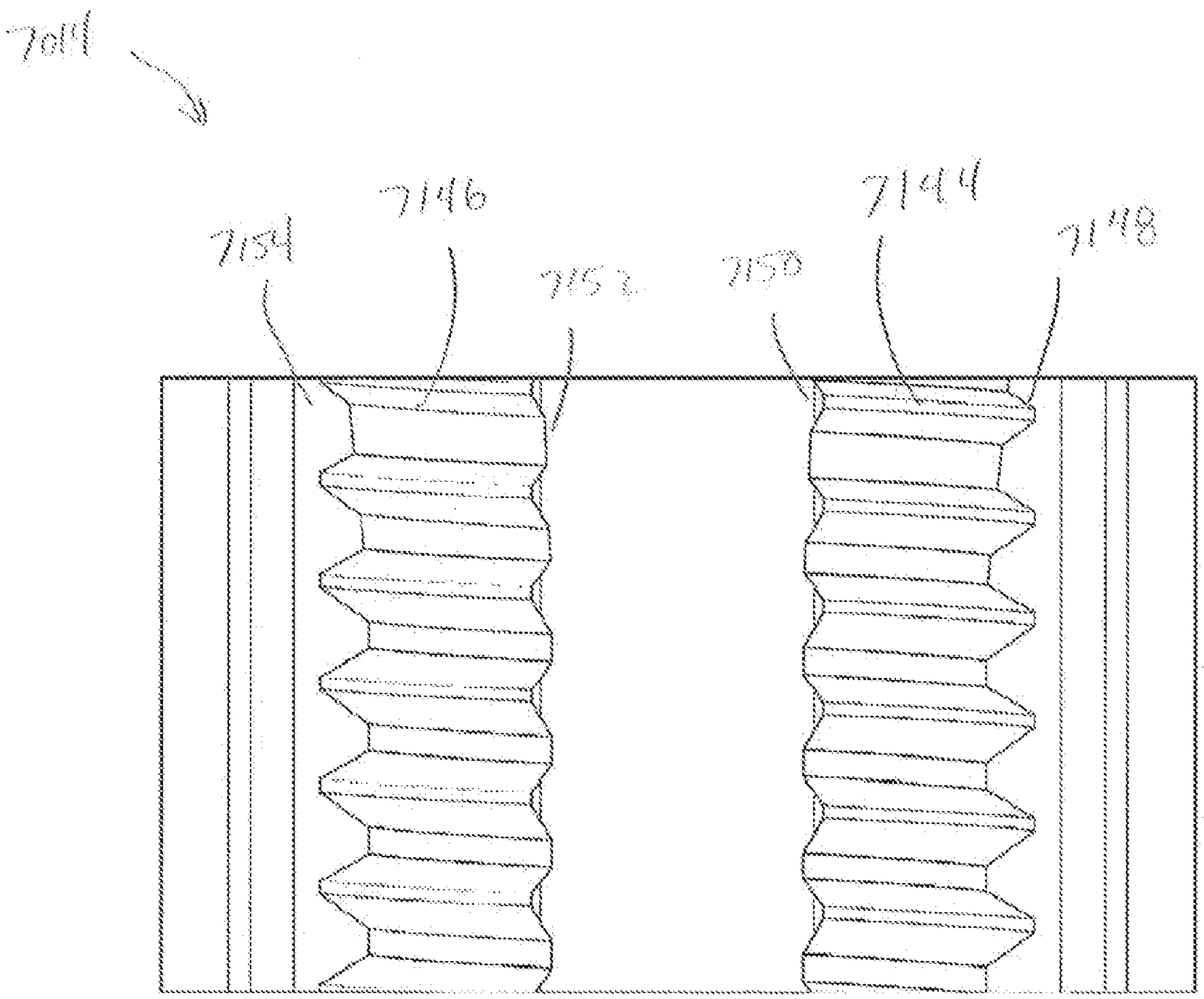

FIG. 30

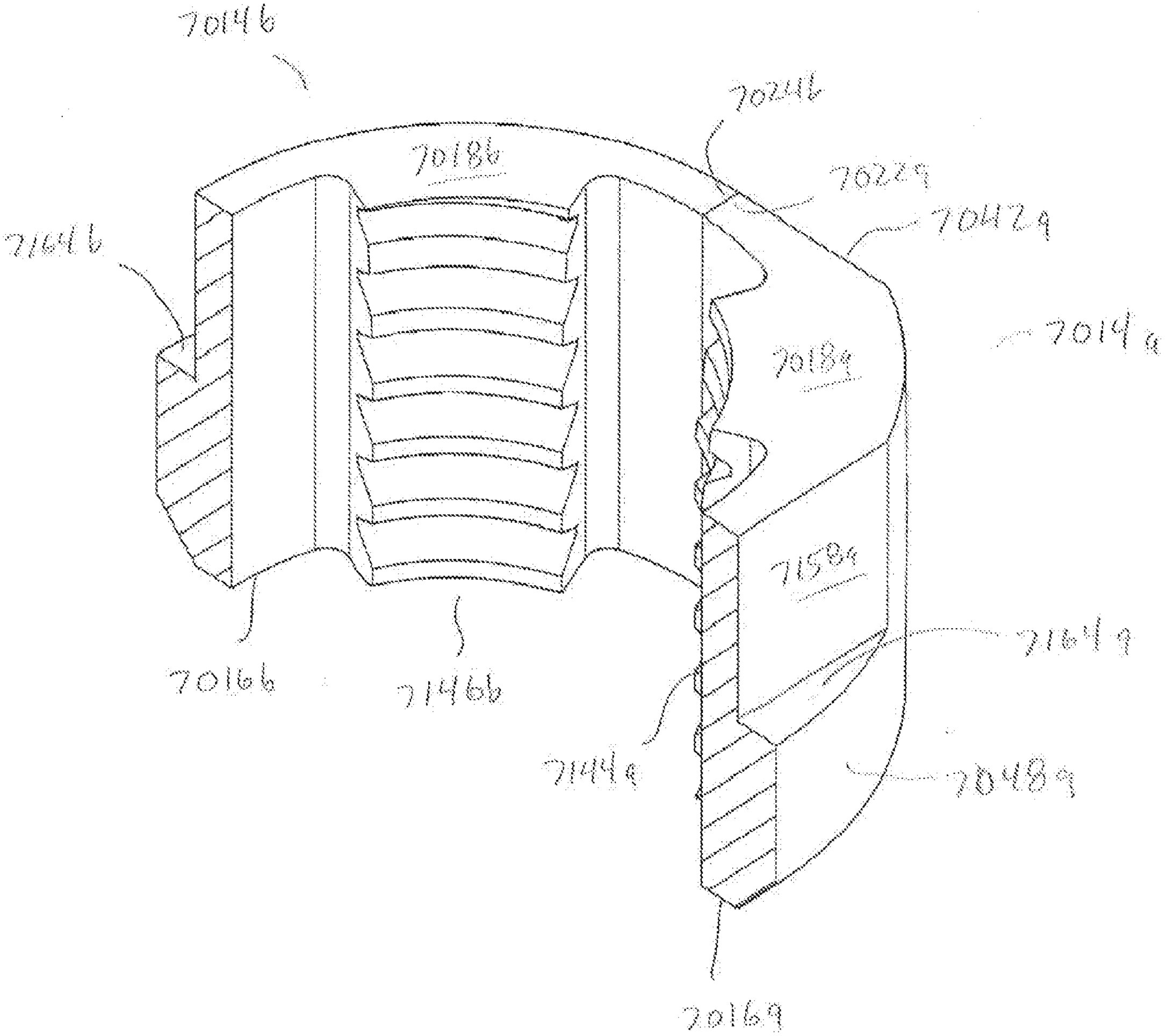
70146
70186
70229
70429
70196
71646
70186
71586
71646
71446
70486
70166
71466
70169

FIG. 31

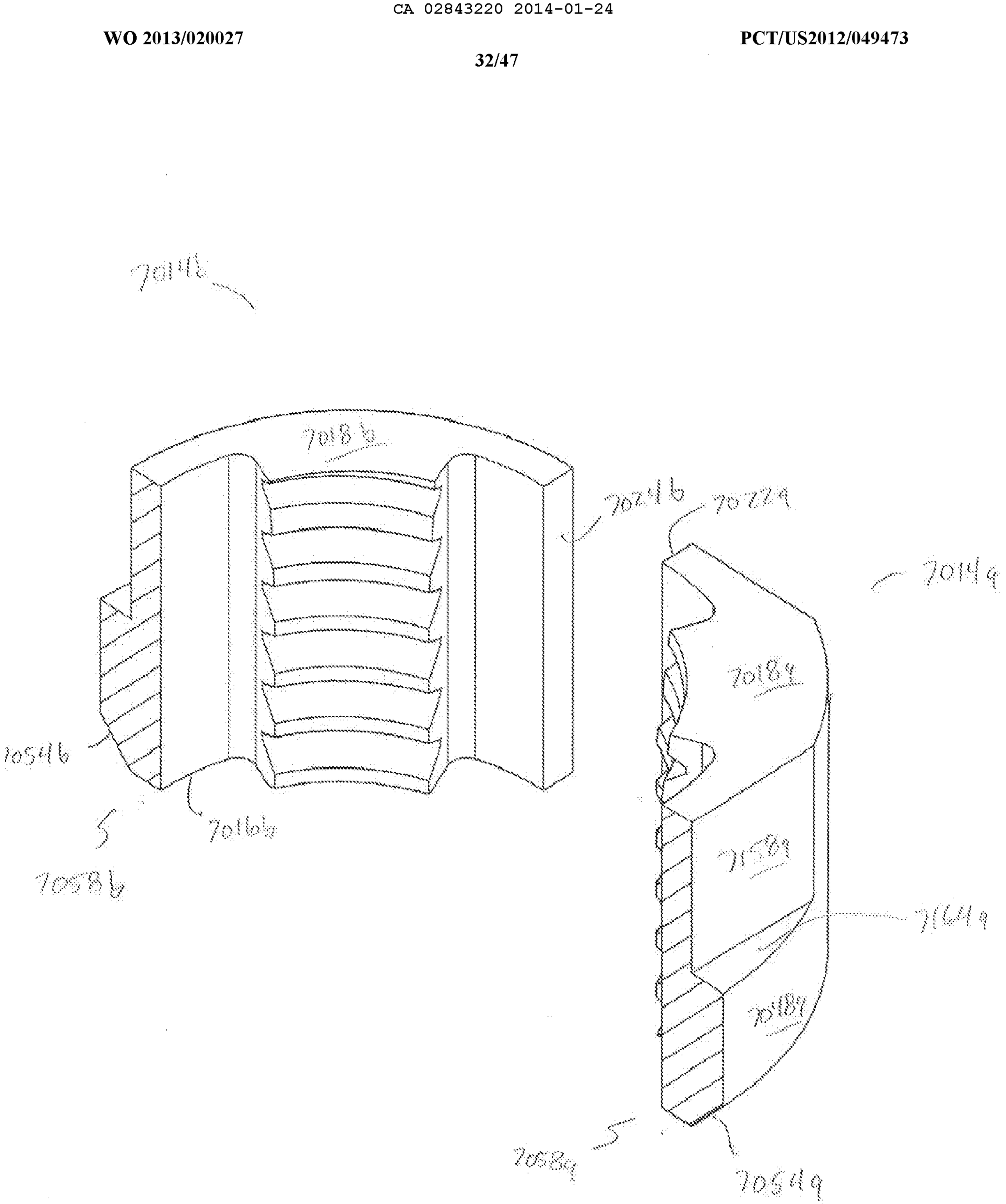
7018b
7024b
7022b
7014b
10546
5
7016b
7058b
7018a
7014a
7038a
7044a
7048a
7058a
5
7054a

FIG. 32

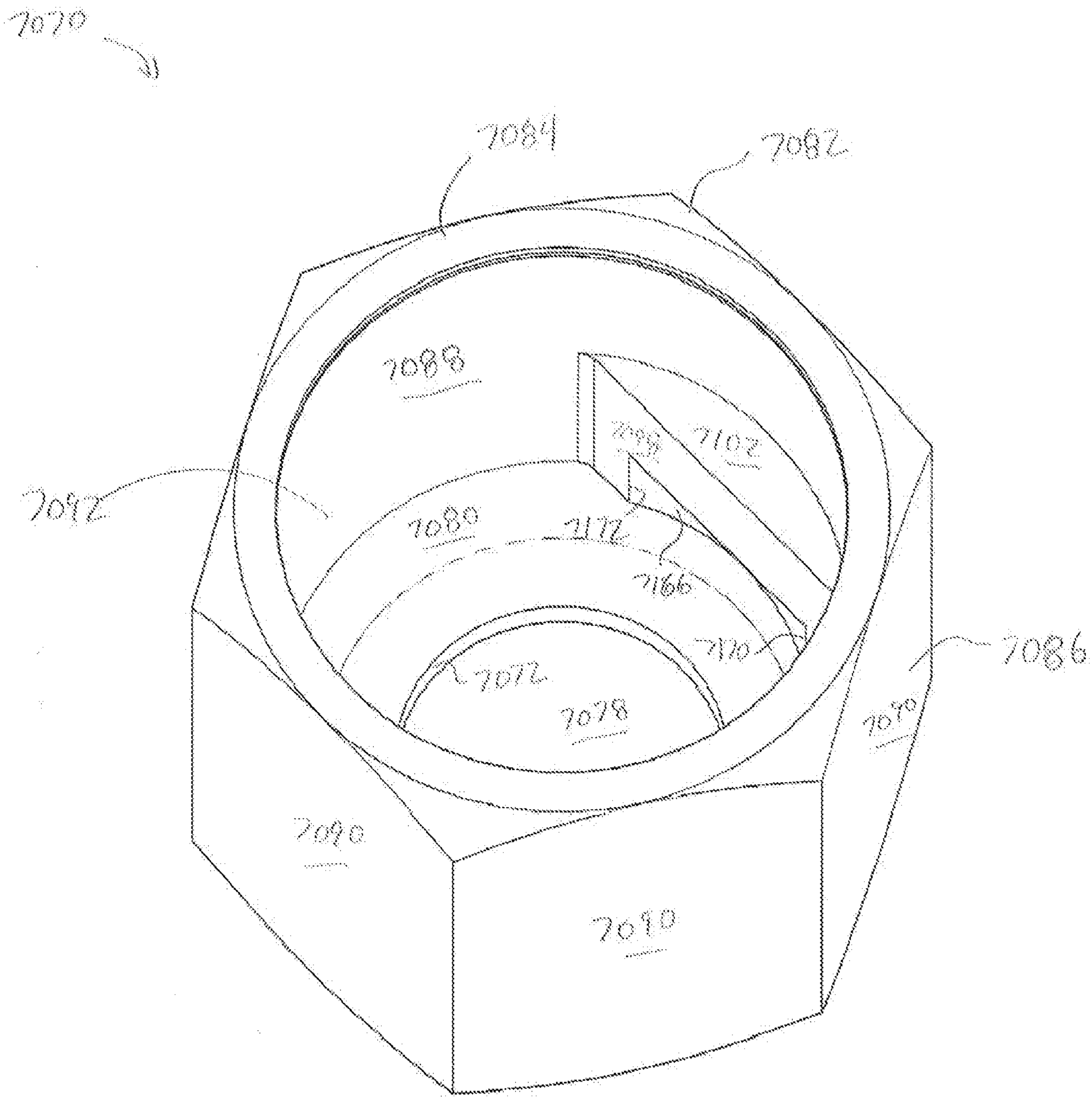
7079
7084
7082
7088
7092
7080
7094
7096
7098
7102
7100
7066
7086
7072
7078
7070
7090
7090

FIG. 33

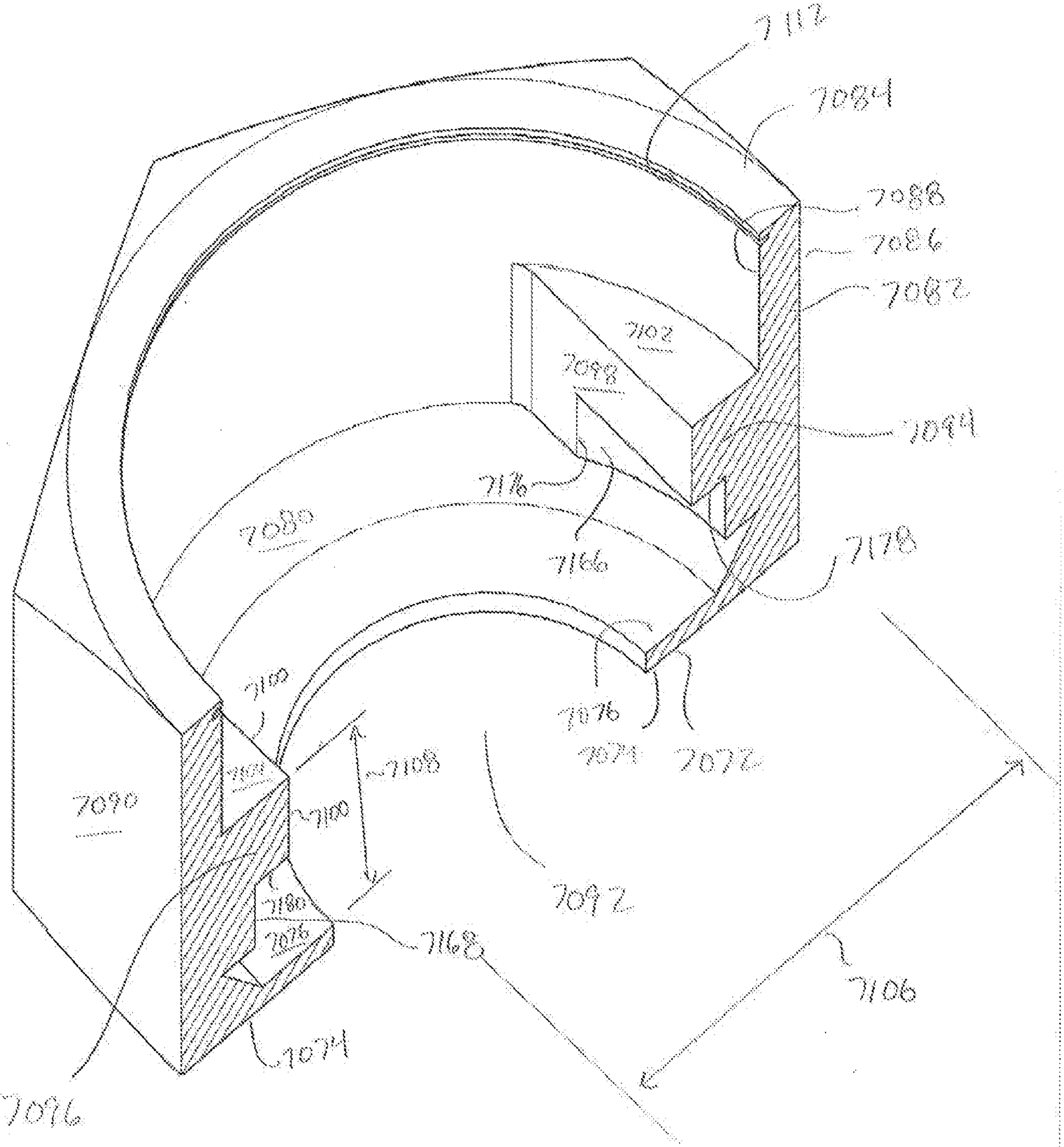
7084
7088
7086
7082
7102
7098
7094
7116
7166
7088
7178
7176
7074
7072
7108
7100
7090
7180
7076
7168
7106
7074
7096

FIG. 34

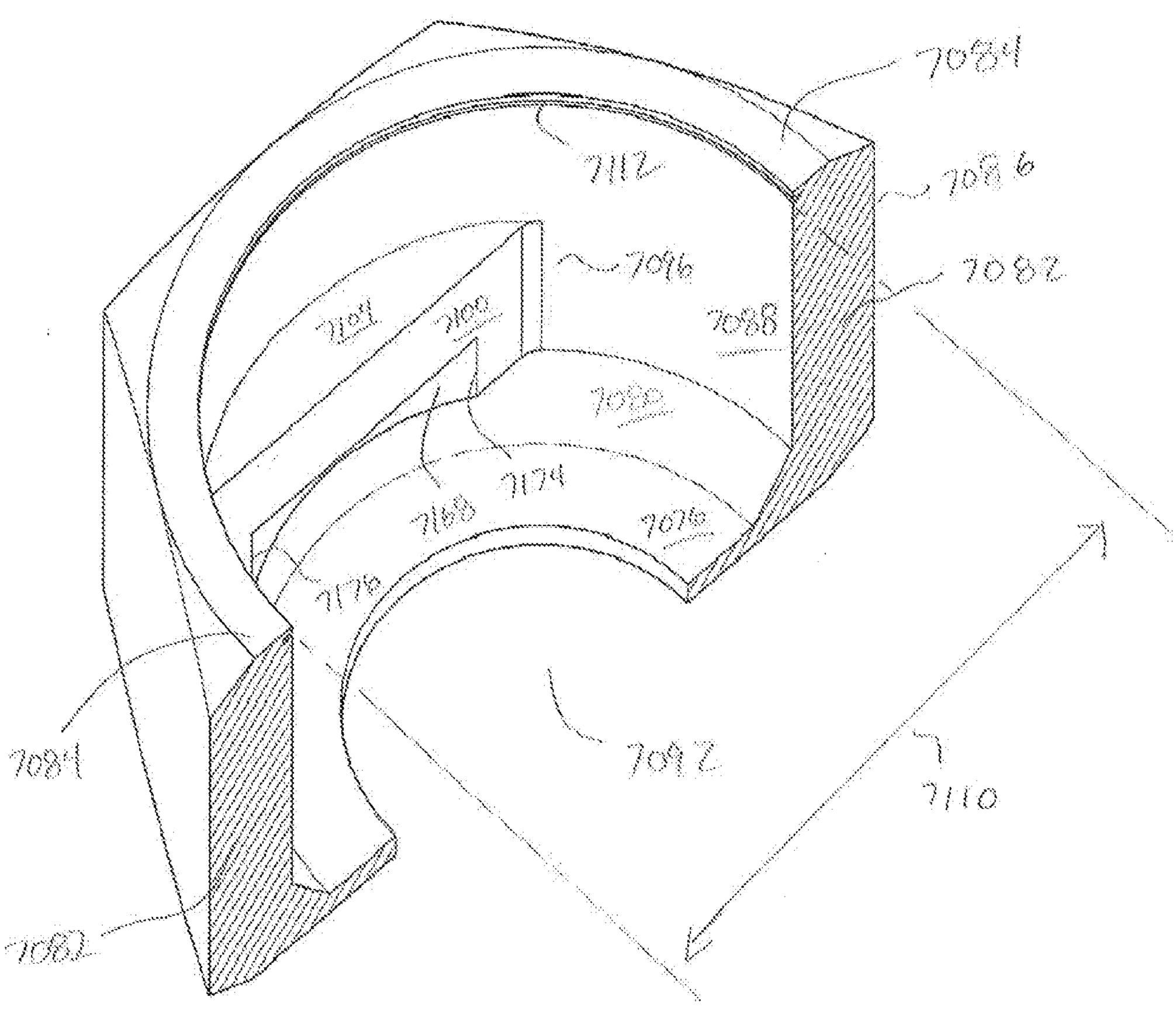
7084
7086
7082
7112
7096
7094
7100
7088
7092
7074
7068
7076
7078
7084
7082
7092
7110

FIG. 35

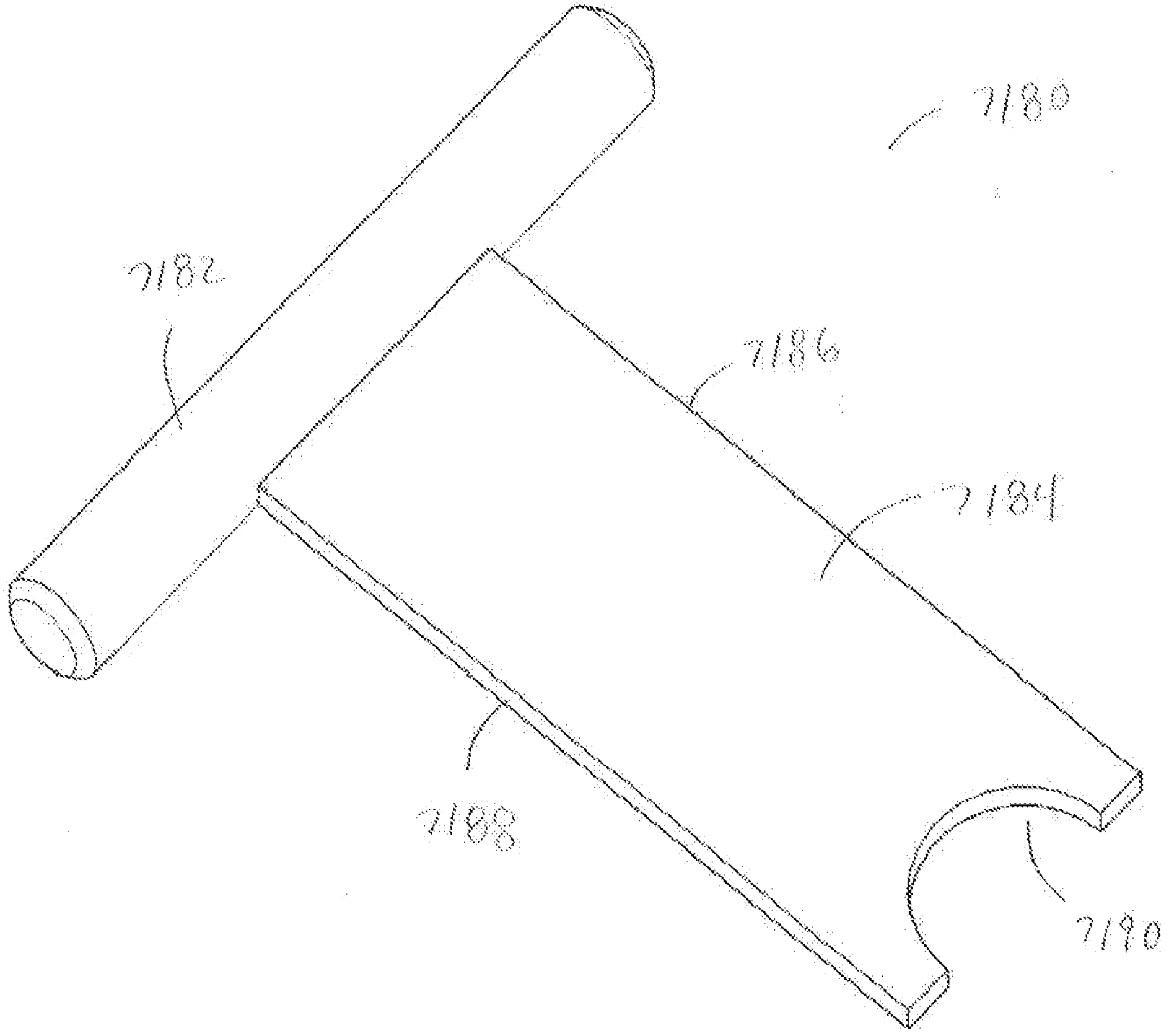

FIG. 36

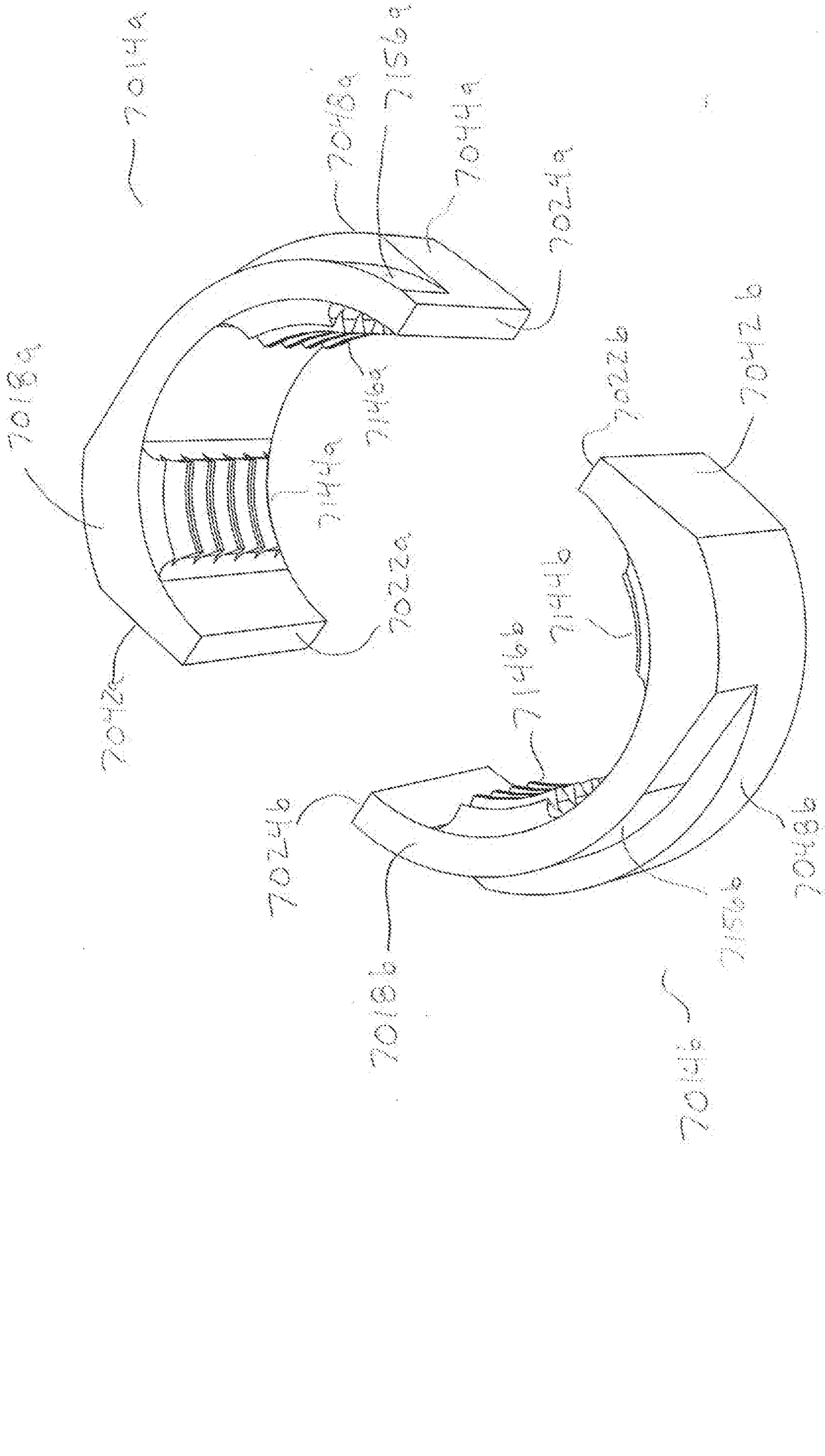
70a
70b
70c
70d
70e
70f
70g
70h
70i
70j
70k
70l
70m
70n
70o
70p
70q
70r
70s
70t
70u
70v
70w
70x
70y
70z
70aa
70ab
70ac
70ad
70ae
70af
70ag
70ah
70ai
70aj
70ak
70al
70am
70an
70ao
70ap
70aq
70ar
70as
70at
70au
70av
70aw
70ax
70ay
70az
70ba
70bb
70bc
70bd
70be
70bf
70bg
70bh
70bi
70bj
70bk
70bl
70bm
70bn
70bo
70bp
70bq
70br
70bs
70bt
70bu
70bv
70bw
70bx
70by
70bz
70ca
70cb
70cc
70cd
70ce
70cf
70cg
70ch
70ci
70cj
70ck
70cl
70cm
70cn
70co
70cp
70cq
70cr
70cs
70ct
70cu
70cv
70cw
70cx
70cy
70cz
70da
70db
70dc
70dd
70de
70df
70dg
70dh
70di
70dj
70dk
70dl
70dm
70dn
70do
70dp
70dq
70dr
70ds
70dt
70du
70dv
70dw
70dx
70dy
70dz
70ea
70eb
70ec
70ed
70ee
70ef
70eg
70eh
70ei
70ej
70ek
70el
70em
70en
70eo
70ep
70eq
70er
70es
70et
70eu
70ev
70ew
70ex
70ey
70ez
70fa
70fb
70fc
70fd
70fe
70ff
70fg
70fh
70fi
70fj
70fk
70fl
70fm
70fn
70fo
70fp
70fq
70fr
70fs
70ft
70fu
70fv
70fw
70fx
70fy
70fz
70ga
70gb
70gc
70gd
70ge
70gf
70gg
70gh
70gi
70gj
70gk
70gl
70gm
70gn
70go
70gp
70gq
70gr
70gs
70gt
70gu
70gv
70gw
70gx
70gy
70gz
70ha
70hb
70hc
70hd
70he
70hf
70hg
70hh
70hi
70hj
70hk
70hl
70hm
70hn
70ho
70hp
70hq
70hr
70hs
70ht
70hu
70hv
70hw
70hx
70hy
70hz
70ia
70ib
70ic
70id
70ie
70if
70ig
70ih
70ii
70ij
70ik
70il
70im
70in
70io
70ip
70iq
70ir
70is
70it
70iu
70iv
70iw
70ix
70iy
70iz
70ja
70jb
70jc
70jd
70je
70jf
70jg
70jh
70ji
70jj
70jk
70jl
70jm
70jn
70jo
70jp
70jq
70jr
70js
70jt
70ju
70jv
70jw
70jx
70jy
70jz
70ka
70kb
70kc
70kd
70ke
70kf
70kg
70kh
70ki
70kj
70kk
70kl
70km
70kn
70ko
70kp
70kq
70kr
70ks
70kt
70ku
70kv
70kw
70kx
70ky
70kz
70la
70lb
70lc
70ld
70le
70lf
70lg
70lh
70li
70lj
70lk
70ll
70lm
70ln
70lo
70lp
70lq
70lr
70ls
70lt
70lu
70lv
70lw
70lx
70ly
70lz
70ma
70mb
70mc
70md
70me
70mf
70mg
70mh
70mi
70mj
70mk
70ml
70mm
70mn
70mo
70mp
70mq
70mr
70ms
70mt
70mu
70mv
70mw
70mx
70my
70mz
70na
70nb
70nc
70nd
70ne
70nf
70ng
70nh
70ni
70nj
70nk
70nl
70nm
70nn
70no
70np
70nq
70nr
70ns
70nt
70nu
70nv
70nw
70nx
70ny
70nz
70oa
70ob
70oc
70od
70oe
70of
70og
70oh
70oi
70oj
70ok
70ol
70om
70on
70oo
70op
70oq
70or
70os
70ot
70ou
70ov
70ow
70ox
70oy
70oz
70pa
70pb
70pc
70pd
70pe
70pf
70pg
70ph
70pi
70pj
70pk
70pl
70pm
70pn
70po
70pp
70pq
70pr
70ps
70pt
70pu
70pv
70pw
70px
70py
70pz
70qa
70qb
70qc
70qd
70qe
70qf
70qg
70qh
70qi
70qj
70qk
70ql
70qm
70qn
70qo
70qp
70qq
70qr
70qs
70qt
70qu
70qv
70qw
70qx
70qy
70qz
70ra
70rb
70rc
70rd
70re
70rf
70rg
70rh
70ri
70rj
70rk
70rl
70rm
70rn
70ro
70rp
70rq
70rr
70rs
70rt
70ru
70rv
70rw
70rx
70ry
70rz
70sa
70sb
70sc
70sd
70se
70sf
70sg
70sh
70si
70sj
70sk
70sl
70sm
70sn
70so
70sp
70sq
70sr
70ss
70st
70su
70sv
70sw
70sx
70sy
70sz
70ta
70tb
70tc
70td
70te
70tf
70tg
70th
70ti
70tj
70tk
70tl
70tm
70tn
70to
70tp
70tq
70tr
70ts
70tt
70tu
70tv
70tw
70tx
70ty
70tz
70ua
70ub
70uc
70ud
70ue
70uf
70ug
70uh
70ui
70uj
70uk
70ul
70um
70un
70uo
70up
70uq
70ur
70us
70ut
70uu
70uv
70uw
70ux
70uy
70uz
70va
70vb
70vc
70vd
70ve
70vf
70vg
70vh
70vi
70vj
70vk
70vl
70vm
70vn
70vo
70vp
70vq
70vr
70vs
70vt
70vu
70vv
70vw
70vx
70vy
70vz
70wa
70wb
70wc
70wd
70we
70wf
70wg
70wh
70wi
70wj
70wk
70wl
70wm
70wn
70wo
70wp
70wq
70wr
70ws
70wt
70wu
70wv
70ww
70wx
70wy
70wz
70xa
70xb
70xc
70xd
70xe
70xf
70xg
70xh
70xi
70xj
70xk
70xl
70xm
70xn
70xo
70xp
70xq
70xr
70xs
70xt
70xu
70xv
70xw
70xx
70xy
70xz
70ya
70yb
70yc
70yd
70ye
70yf
70yg
70yh
70yi
70yj
70yk
70yl
70ym
70yn
70yo
70yp
70yq
70yr
70ys
70yt
70yu
70yv
70yw
70yx
70yy
70yz
70za
70zb
70zc
70zd
70ze
70zf
70zg
70zh
70zi
70zj
70zk
70zl
70zm
70zn
70zo
70zp
70zq
70zr
70zs
70zt
70zu
70zv
70zw
70zx
70zy
70zz
70aaa
70aab
70aac
70aad
70aae
70aaf
70aag
70aah
70aai
70aaj
70aak
70aal
70aam
70aan
70aao
70aap
70aaq
70aar
70aas
70aat
70aau
70aav
70aaw
70aax
70aay
70aaz
70aba
70abb
70abc
70abd
70abe
70abf
70abg
70abh
70abi
70abj
70abk
70abl
70abm
70abn
70abo
70abp
70abq
70abr
70abs
70abt
70abu
70abv
70abw
70abx
70aby
70abz
70aca
70acb
70acc
70acd
70ace
70acf
70acg
70ach
70aci
70acj
70ack
70acl
70acm
70acn
70aco
70acp
70acq
70acr
70acs
70act
70acu
70acv
70acw
70acx
70acy
70acz
70ada
70adb
70adc
70add
70ade
70adf
70adg
70adh
70adi
70adj
70adk
70adl
70adm
70adn
70ado
70adp
70adq
70adr
70ads
70adt
70adu
70adv
70adw
70adx
70ady
70adz
70aea
70aeb
70aec
70aed
70aee
70aef
70aeg
70aeh
70aei
70aej
70aek
70ael
70aem
70aen
70aeo
70aep
70aeq
70aer
70aes
70aet
70aeu
70aev
70aew
70aex
70aey
70aez
70afa
70afb
70afc
70afd
70afe
70aff
70afg
70afh
70afi
70afj
70afk
70afl
70afm
70afn
70afo
70afp
70afq
70afr
70afs
70aft
70afu
70afv
70afw
70afx
70afy
70afz
70aga
70agb
70agc
70agd
70age
70agf
70agg
70agh
70agi
70agj
70agk
70agl
70agm
70agn
70ago
70agp
70agq
70agr
70ags
70agt
70agu
70agv
70agw
70agx
70agy
70agz
70aha
70ahb
70ahc
70ahd
70ahe
70ahf
70ahg
70ahh
70ahi
70ahj
70ahk
70ahl
70ahm
70ahn
70aho
70ahp
70ahq
70ahr
70ahs
70aht
70ahu
70ahv
70ahw
70ahx
70ahy
70ahz
70aia
70aib
70aic
70aid
70aie
70aif
70aig
70aih
70aii
70aij
70aik
70ail
70aim
70ain
70aio
70aip
70aiq
70air
70ais
70ait
70aiu
70aiv
70aiw
70aix
70aiy
70aiz
70aja
70ajb
70ajc
70ajd
70aje
70ajf
70ajg
70ajh
70aji
70ajj
70ajk
70ajl
70ajm
70ajn
70ajo
70ajp
70ajq
70ajr
70ajs
70ajt
70aju
70ajv
70ajw
70ajx
70ajy
70ajz
70aka
70akb
70akc
70akd
70ake
70akf
70akg
70akh
70aki
70akj
70akk
70akl
70akm
70akn
70ako
70akp
70akq
70akr
70aks
70akt
70aku
70akv
70akw
70akx
70aky
70akz
70ala
70alb
70alc
70ald
70ale
70alf
70alg
70alh
70ali
70alj
70alk
70all
70alm
70aln
70alo
70alp
70alq
70alr
70als
70alt
70alu
70alv
70alw
70alx
70aly
70alz
70ama
70amb
70amc
70amd
70ame
70amf
70amg
70amh
70ami
70amj
70amk
70aml
70amm
70amn
70amo
70amp
70amq
70amr
70ams
70amt
70amu
70amv
70amw
70amx
70amy
70amz
70ana
70anb
70anc
70and
70ane
70anf
70ang
70anh
70ani
70anj
70ank
70anl
70anm
70ann
70ano
70anp
70anq
70anr
70ans
70ant
70anu
70anv
70anw
70anx
70any
70anz
70aoa
70aob
70aoc
70aod
70aoe
70aof
70aog
70aoh
70aoi
70aoj
70aok
70aol
70aom
70aon
70aoo
70aop
70aoq
70aor
70aos
70aot
70aou
70aov
70aow
70aox
70aoy
70aoz
70apa
70apb
70apc
70apd
70ape
70apf
70apg
70aph
70api
70apj
70apk
70apl
70apm
70apn
70apo
70app
70apq
70apr
70aps
70apt
70apu
70apv
70apw
70apx
70apy
70apz
70aqa
70aqb
70aqc
70aqd
70aqe
70aqf
70aqg
70aqh
70aqi
70aqj
70aqk
70aql
70aqm
70aqn
70aqo
70aqp
70aqq
70aqr
70aqs
70aqt
70aqu
70aqv
70aqw
70aqx
70aqy
70aqz
70ara
70arb
70arc
70ard
70are
70arf
70arg
70arh
70ari
70arj
70ark
70arl
70arm
70arn
70aro
70arp
70arq
70arr
70ars
70art
70aru
70arv
70arw
70arx
70ary
70arz
70asa
70asb
70asc
70asd
70ase
70asf
70asg
70ash
70asi
70asj
70ask
70asl
70asm
70asn
70aso
70asp
70asq
70asr
70ass
70ast
70asu
70asv
70asw
70asx
70asy
70asz
70ata
70atb
70atc
70atd
70ate
70atf
70atg
70ath
70ati
70atj
70atk
70atl
70atm
70atn
70ato
70atp
70atq
70atr
70ats
70att
70atu
70atv
70atw
70atx
70aty
70atz
70aua
70aub
70auc
70aud
70aue
70auf
70aug
70auh
70aui
70auj
70auk
70aul
70aum
70aun
70auo
70aup
70auq
70aur
70aus
70aut
70auu
70auv
70auw
70aux
70auy
70auz
70ava
70avb
70avc
70avd
70ave
70avf
70avg
70avh
70avi
70avj
70avk
70avl
70avm
70avn
70avo
70avp
70avq
70avr
70avs
70avt
70avu
70avv
70avw
70avx
70avy
70avz
70awa
70awb
70awc
70awd
70awe
70awf
70awg
70awh
70awi
70awj
70awk
70awl
70awm
70awn
70awo
70awp
70awq
70awr
70aws
70awt
70awu
70awv
70aww
70awx
70awy
70awz
70axa
70axb
70axc
70axd
70axe
70axf
70axg
70axh
70axi
70axj
70axk
70axl
70axm
70axn
70axo
70axp
70axq
70axr
70axs
70axt
70axu
70axv
70axw
70axx
70axy
70axz
70aya
70ayb
70ayc
70ayd
70aye
70ayf
70ayg
70ayh
70ayi
70ayj
70ayk
70ayl
70aym
70ayn
70ayo
70ayp
70ayq
70ayr
70ays
70ayt
70ayu
70ayv
70ayw
70ayx
70ayy
70ayz
70aza
70azb
70azc
70azd
70aze
70azf
70azg
70azh
70azi
70azj
70azk
70azl
70azm
70azn
70azo
70azp
70azq
70azr
70azs
70azt
70azu
70azv
70azw
70azx
70azy
70azz
70baa
70bab
70bac
70bad
70bae
70baf
70bag
70bah
70bai
70baj
70bak
70bal
70bam
70ban
70bao
70bap
70baq
70bar
70bas
70bat
70bau
70bav
70baw
70bax
70bay
70baz
70bba
70bbb
70bbc
70bbd
70bbe
70bbf
70bbg
70bbh
70bbi
70bbj
70bbk
70bbl
70bbm
70bbn
70bbo
70bbp
70bbq
70bbr
70bbs
70bbt
70bbu
70bbv
70bbw
70bbx
70bby
70bbz
70bca
70bcb
70bcc
70bcd
70bce
70bcf
70bcg
70bch
70bci
70bcj
70bck
70bcl
70bcm
70bcn
70bco
70bcp
70bcq
70bcr
70bcs
70bct
70bcu
70bcv
70bcw
70bcx
70bcy
70bcz
70bda
70bdb
70bdc
70bdd
70bde
70bdf
70bdg
70bdh
70bdi
70bdj
70bdk
70bdl
70bdm
70bdn
70bdo
70bdp
70bdq
70bdr
70bds
70bdt
70bdu
70bdv
70bdw
70bdx
70bdy
70bdz
70bea
70beb
70bec
70bed
70bee
70bef
70beg
70beh
70bei
70bej
70bek
70bel
70bem
70ben
70beo
70bep
70beq
70ber
70bes
70bet
70beu
70bev
70bew
70bex
70bey
70bez
70bfa
70bfb
70bfc
70bfd
70bfe
70bff
70bfg
70bfh
70bfi
70bfj
70bfk
70bfl
70bfm
70bfn
70bfo
70bfp
70bfq
70bfr
70bfs
70bft
70bfu
70bfv
70bfw
70bfx
70bfy
70bfz
70bga
70bgb
70bgc
70bgd
70bge
70bgf
70bgg
70bgh
70bgi
70bgj
70bgk
70bgl
70bgm
70bgn
70bgo
70bgp
70bgq
70bgr
70bgs
70bgt
70bgu
70bgv
70bgw
70bgx
70bgy
70bgz
70bha
70bhb
70bhc
70bhd
70bhe
70bhf
70bhg
70bhh
70bhi
70bhj
70bhk
70bhl
70bhm
70bhn
70bho
70bhp
70bhq
70bhr
70bhs
70bht
70bhu
70bhv
70bhw
70bhx
70bhy
70bhz
70bia
70bib
70bic
70bid
70bie
70bif
70big
70bih
70bii
70bij
70bik
70bil
70bim
70bin
70bio
70bip
70biq
70bir
70bis
70bit
70biu
70biv
70biw
70bix
70biy
70biz
70bja
70bjb
70bjc
70bjd
70bje
70bjf
70bjg
70bjh
70bji
70bjj
70bjk
70bjl
70bjm
70bjn
70bjo
70bjp
70bjq
70bjr
70bjs
70bjt
70bju
70bjv
70bjw
70bjx
70bjy
70bjz
70bka
70bkb
70bkc
70bkd
70bke
70bkf
70bkg
70bkh
70bki
70bkj
70bkk
70bkl
70bkm
70bkn
70bko
70bkp
70bkq
70bkr
70bks
70bkt
70bku
70bkv
70bkw
70bkx
70bky
70bkz
70bla
70blb
70blc
70bld
70ble
70blf
70blg
70blh
70bli
70blj
70blk
70bll
70blm
70bln
70blo
70blp
70blq
70blr
70bls
70blt
70blu
70blv
70blw
70blx
70bly
70blz
70bma
70bmb
70bmc
70bmd
70bme
70bmf
70bmg
70bmh
70bmi
70bmj
70bmk
70bml
70bmm
70bmn
70bmo
70bmp
70bmq
70bmr
70bms
70bmt
70bmu
70bmv
70bmw
70bmx
70bmy
70bmz
70bna
70bnb
70bnc
70bnd
70bne
70bnf
70bng
70bnh
70bni
70bnj
70bnk
70bnl
70bnm
70bnn
70bno
70bnp
70bnq
70bnr
70bns
70bnt
70bnu
70bnv
70bnw
70bnx
70bny
70bnz
70boa
70bob
70boc
70bod
70boe
70bof
70bog
70boh
70boi
70boj
70bok
70bol
70bom
70bon
70boo
70bop
70boq
70bor
70bos
70bot
70bou
70bov
70bow
70box
70boy
70boz
70bpa
70bpb
70bpc
70bpd
70bpe
70bpf
70bpg
70bph
70bpi
70bpj
70bpk
70bpl
70bpm
70bpn
70bpo
70bpp
70bpq
70bpr
70bps
70bpt
70bpu
70bpv
70bpw
70bpx
70bpy
70bpz
70bqa
70bqb
70bqc
70bqd
70bqe
70bqf
70bqg
70bqh
70bqi
70bqj
70bqk
70bql
70bqm
70bqn
70bqo
70bqp
70bqq
70bqr
70bqs
70bqt
70bqu
70bqv
70bqw
70bqx
70bqy
70bqz
70bra
70brb
70brc
70brd
70bre
70brf
70brg
70brh
70bri
70brj
70brk
70brl
70brm
70brn
70bro
70brp
70brq
70brr
70brs
70brt
70bru
70brv
70brw
70brx
70bry
70brz
70bsa
70bsb
70bsc
70bsd
70bse
70bsf
70bsg
70bsh
70bsi
70bsj
70bsk
70bsl
70bsm
70bsn
70bso
70bsp
70bsq
70bsr
70bss
70bst
70bsu
70bsv
70bsw
70bsx
70bsy
70bsz
70bta
70btb
70btc
70btd
70bte
70btf
70btg
70bth
70bti
70btj
70btk
70btl
70btm
70btn
70bto
70btp
70btq
70btr
70bts
70btt
70btu
70btv
70btw
70btx
70bty
70btz
70bua
70bub
70buc
70bud
70bue
70buf
70bug
70buh
70bui
70buj
70buk
70bul
70bum
70bun
70buo
70bup
70buq
70bur
70bus
70but
70buu
70buv
70buw
70bux
70buy
70buz
70bva
70bvb
70bvc
70bvd
70bve
70bvf
70bvg
70bvh
70bvi
70bvj
70bvk
70bvl
70bvm
70bvn
70bvo
70bvp
70bvq
70bvr
70bvs
70bvt
70bvu
70bvv
70bvw
70bvx
70bvy
70bvz
70bwa
70bwb
70bwc
70bwd
70bwe
70bwf
70bwg
70bwh
70bwi
70bwj
70bwk
70bwl
70bwm
70bwn
70bwo
70bwp
70bwq
70bwr
70bws
70bwt
70bwu
70bwv
70bww
70bwx
70bwy
70bwz
70bxa
70bxb
70bxc
70bxd
70bxe
70bxf
70bxg
70bxh
70bxi
70bxj
70bxk
70bxl
70bxm
70bxn
70bxo
70bxp
70bxq
70bxr
70bxs
70bxt
70bxu
70bxv
70bxw
70bxx
70bxy
70bxz
70bya
70byb
70byc
70byd
70bye
70byf
70byg
70byh
70byi
70byj
70byk
70byl
70bym
70byn
70byo
70byp
70byq
70byr
70bys
70byt
70byu
70byv
70byw
70byx
70byy
70byz
70bza
70bzb
70bzc
70bzd
70bze
70bzf
70bzg
70bzh
70bzi
70bzj
70bzk
70bzl
70bzm
70bzn
70bzo
70bzp
70bzq
70bzr
70bzs
70bzt
70bzu
70bzv
70bzw
70bzx
70bzy
70bzz
70caa
70cab
70cac
70cad
70cae
70caf
70cag
70cah
70cai
70caj
70cak
70cal
70cam
70can
70cao
70cap
70caq
70car
70cas
70cat
70cau
70cav
70caw
70cax
70cay
70caz
70cba
70cbb
70cbc
70cbd
70cbe
70cbf
70cbg
70cbh
70cbi
70cbj
70cbk
70cbl
70cbm
70cbn
70cbo
70cbp
70cbq
70cbr
70cbs
70cbt
70cbu
70cbv
70cbw
70cbx
70cby
70cbz
70cca
70ccb
70ccc
70ccd
70cce
70ccf
70ccg
70cch
70cci
70ccj
70cck
70ccl
70ccm
70ccn
70cco
70ccp
70ccq
70ccr
70ccs
70cct
70ccu
70ccv
70ccw
70ccx
70ccy
70ccz
70cda
70cdb
70cdc
70cdd
70cde
70cdf
70cdg
70cdh
70cdi
70cdj
70cdk
70cdl
70cdm
70cdn
70cdo
70cdp
70cdq
70cdr
70cds
70cdt
70cdu
70cdv
70cdw
70cdx
70cdy
70cdz
70cea
70ceb
70cec
70ced
70cee
70cef
70ceg
70ceh
70cei
70cej
70cek
70cel
70cem
70cen
70ceo
70cep
70ceq
70cer
70ces
70cet
70ceu
70cev
70cew
70cex
70cey
70cez
70cfa
70cfb
70cfc
70cfd
70cfe
70cff
70cfg
70cfh
70cfi
70cfj
70cfk
70cfl
70cfm
70cfn
70cfo
70cfp
70cfq
70cfr
70cfs
70cft
70cfu
70cfv
70cfw
70cfx
70cfy
70cfz
70cga
70cgb
70cgc
70cgd
70cge
70cgf
70cgg
70cgh
70cgi
70cgj
70cgk
70cgl
70cgm
70cgn
70cgo
70cgp
70cgq
70cgr
70cgs
70cgt
70cgu
70cgv
70cgw
70cgx
70cgy
70cgz
70cha
70chb
70chc
70chd
70che
70chf
70chg
70chh
70chi
70chj
70chk
70chl
70chm
70chn
70cho
70chp
70chq
70chr
70chs
70cht
70chu
70chv
70chw
70chx
70chy
70chz
70cia
70cib
70cic
70cid
70cie
70cif
70cig
70cih
70cii
70cij
70cik
70cil
70cim
70cin
70cio
70cip
70ciq
70cir
70cis
70cit
70ciu
70civ
70ciw
70cix
70ciy
70ciz
70cja
70cjb
70cjc
70cjd
70cje
70cjf
70cjg
70cjh
70cji
70cjj
70cjk
70cjl
70cjm
70cjn
70cjo
70cjp
70cjq
70cjr
70cjs
70cjt
70cju
70cjv
70cjw
70cjx
70cjy
70cjz
70cka
70ckb
70ckc
70ckd
70cke
70ckf
70ckg
70ckh
70cki
70ckj
70ckk
70ckl
70ckm
70ckn
70cko
70ckp
70ckq
70ckr
70cks
70ckt
70cku
70ckv
70ckw
70ckx
70cky
70ckz
70cla
70clb
70clc
70cld
70cle
70clf
70clg
70clh
70cli
70clj
70clk
70cll
70clm
70cln
70clo
70clp
70clq
70clr
70cls
70clt
70clu
70clv
70clw
70clx
70cly
70clz
70cma
70cmb
70cmc
70cmd
70cme
70cmf
70cmg
70cmh
70cmi
70cmj
70cmk
70cml
70cmm
70cmn
70cmo
70cmp
70cmq
70cmr
70cms
70cmt
70cmu
70cmv
70cmw
70cmx
70cmy
70cmz
70cna
70cnb
70cnc
70cnd
70cne
70cnf
70cng
70cnh
70cni
70cnj
70cnk
70cnl
70cnm
70cnn
70cno
70cnp
70cnq
70cnr
70cns
70cnt
70cnu
70cnv
70cnw
70cnx
70cny
70cnz
70coa
70cob
70coc
70cod
70coe
70cof
70cog
70coh
70coi
70coj
70cok
70col
70com
70con
70coo
70cop
70coq
70cor
70cos
70cot
70cou
70cov
70cow
70cox
70coy
70coz
70cpa
70cpb
70cpc
70cpd
70cpe
70cpf
70cpg
70cph
70cpi
70cpj
70cpk
70cpl
70cpm
70cpn
70cpo
70cpp
70cpq
70cpr
70cps
70cpt
70cpu
70cpv
70cpw
70cpx
70cpy
70cpz
70cqa
70cqb
70cqc
70cqd
70cqe
70cqf
70cqg
70cqh
70cqi
70cqj
70cqk
70cql
70cqm
70cqn
70cqo
70cqp
70cqq
70cqr
70cqs
70cqt
70cqu
70cqv
70cqw
70cqx
70cqy
70cqz
70cra
70crb
70crc
70crd
70cre
70crf
70crg
70crh
70cri
70crj
70crk
70crl
70crm
70crn
70cro
70crp
70crq
70crr
70crs
70crt
70cru
70crv
70crw
70crx
70cry
70crz
70csa
70csb
70csc
70csd
70cse
70csf
70csg
70csh
70csi
70csj
70csk
70csl
70csm
70csn
70cso
70csp
70csq
70csr
70css
70cst
70csu
70csv
70csw
70csx
70csy
70csz
70cta
70ctb
70ctc
70ctd
70cte
70ctf
70ctg
70cth
70cti
70ctj
70ctk
70ctl
70ctm
70ctn
70cto
70ctp
70ctq
70ctr
70cts
70ctt
70ctu
70ctv
70ctw
70ctx
70cty
70ctz
70cua
70cub
70cuc
70cud
70cue
70cuf
70cug
70cuh
70cui
70cuj
70cuk
70cul
70cum
70cun
70cuo
70cup
70cuq
70cur
70cus
70cut
70cuu
70cuv
70cuw
70cux
70cuy
70cuz
70cva
70cvb
70cvc
70cvd
70cve
70cvf
70cvg
70cvh
70cvi
70cvj
70cvk
70cvl
70cvm
70cvn
70cvo
70cvp
70cvq
70cvr
70cvs
70cvt
70cvu
70cvv
70cvw
70cvx
70cvy
70cvz
70cwa
70cwb
70cwc
70cwd
70cwe
70cwf
70cwg
70cwh
70cwi
70cwj
70cwk
70cwl
70cwm
70cwn
70cwo
70cwp
70cwq
70cwr
70cws
70cwt
70cwu
70cwv
70cww
70cwx
70cwy
70cwz
70cxa
70cxb
70cxc
70cxd
70cxe
70cxf
70cxg
70cxh
70cxi
70cxj
70cxk
70cxl
70cxm
70cxn
70cxo
70cxp
70cxq
70cxr
70cxs
70cxt
70cxu
70cxv
70cxw
70cxx
70cxy
70cxz
70cya
70cyb
70cyc
70cyd
70cye
70cyf
70cyg
70cyh
70cyi
70cyj
70cyk
70cyl
70cym
70cyn
70cyo
70cyp
70cyq
70cyr
70cys
70cyt
70cyu
70cyv
70cyw
70cyx
70cyy
70cyz
70cza
70czb
70czc
70czd
70cze
70czf
70czg
70czh
70czi
70czj
70czk
70czl
70czm
70czn
70czo
70czp
70czq
70czr
70czs
70czt
70czu
70czv
70czw
70czx
70czy
70czz
70daa
70dab
70dac
70dad
70dae
70daf
70dag
70dah
70dai
70daj
70dak
70dal
70dam
70dan
70dao
70dap
70daq
70dar
70das
70dat
70dau
70dav
70daw
70dax
70day
70daz
70dba
70dbb
70dbc
70dbd
70dbe
70dbf
70dbg
70dbh
70dbi
70dbj
70dbk
70dbl
70dbm
70dbn
70dbo
70dbp
70dbq
70dbr
70dbs
70dbt
70dbu
70dbv
70dbw
70dbx
70dby
70dbz
70dca
70dcb
70dcc
70dcd
70dce
70dcf
70dcg
70dch
70dci
70dcj
70dck
70dcl
70dcm
70dcn
70dco
70dcp
70dcq
70dcr
70dcs
70dct
70dcu
70dcv
70dcw
70dcx
70dcy
70dcz
70dda
70ddb
70ddc
70ddd
70dde
70ddf
70ddg
70ddh
70ddi
70ddj
70ddk
70ddl
70ddm
70ddn
70ddo
70ddp
70ddq
70ddr
70dds
70ddt
70ddu
70ddv
70ddw
70ddx
70ddy
70ddz
70dea
70deb
70dec
70ded
70dee
70def
70deg
70deh
70dei
70dej
70dek
70del
70dem
70den
70deo
70dep
70deq
70der
70des
70det
70deu
70dev
70dew
70dex
70dey
70dez
70dfa
70dfb
70dfc
70dfd
70dfe
70dff
70dfg
70dfh
70dfi
70dfj
70dfk
70dfl
70dfm
70dfn
70dfo
70dfp
70dfq
70dfr
70dfs
70dft
70dfu
70dfv
70dfw
70dfx
70dfy
70dfz
70dga
70dgb
70dgc
70dgd
70dge
70dgf
70dgg
70dgh
70dgi
70dgj
70dgk
70dgl
70dgm
70dgn
70dgo
70dgp
70dgq
70dgr
70dgs
70dgt
70dgu
70dgv
70dgw
70dgx
70dgy
70dgz
70dha
70dhb
70dhc
70dhd
70dhe
70dhf
70dhg
70dhh
70dhi
70dhj
70dhk
70dhl
70dhm
70dhn
70dho
70dhp
70dhq
70dhr
70dhs
70dht
70dhu
70dhv
70dhw
70dhx
70dhy
70dhz
70dia
70dib
70dic
70did
70die
70dif
70dig
70dih
70dii
70dij
70dik
70dil
70dim
70din
70dio
70dip
70diq
70dir
70dis
70dit
70diu
70div
70diw
70dix
70diy
70diz
70dja
70djb
70djc
70djd
70dje
70djf
70djg
70djh
70dji
70djj
70djk
70djl
70djm
70djn
70djo
70djp
70djq
70djr
70djs
70djt
70dju
70djv
70djw
70djx
70djy
70djz
70dka
70dkb
70dkc
70dkd
70dke
70dkf
70dkg
70dkh
70dki
70dkj
70dkk
70dkl
70dkm
70dkn
70dko
70dkp
70dkq
70dkr
70dks
70dkt
70dku
70dkv
70dkw
70dkx
70dky
70dkz
70dla
70dlb
70dlc
70dld
70dle
70dlf
70dlg
70dlh
70dli
70dlj
70dlk
70dll
70dlm
70dln
70dlo
70dlp
70dlq
70dlr
70dls
70dlt
70dlu
70dlv
70dlw
70dlx
70dly
70dlz
70dma
70dmb
70dmc
70dmd
70dme
70dmf
70dmg
70dmh
70dmi
70dmj
70dmk
70dml
70dmm
70dmn
70dmo
70dmp
70dmq
70dmr
70dms
70dmt
70dmu
70dmv
70dmw
70dmx
70dmy
70dmz
70dna
70dnb
70dnc
70dnd
70dne
70dnf
70dng
70dnh
70dni
70dnj
70dnk
70dnl
70dnm
70dnn
70dno
70dnp
70dnq
70dnr
70dns
70dnt
70dnu
70dnv
70dnw
70dnx
70dny
70dnz
70doa
70dob
70doc
70dod
70doe
70dof
70dog
70doh
70doi
70doj
70dok
70dol
70dom
70don
70doo
70dop
70doq
70dor
70dos
70dot
70dou
70dov
70dow
70dox
70doy
70doz
70dpa
70dpb
70dpc
70dpd
70dpe
70dpf
70dpg
70dph
70dpi
70dpj
70dpk
70dpl
70dpm
70dpn
70dpo
70dpp
70dpq
70dpr
70dps
70dpt
70dpu
70dpv
70dpw
70dpx
70dpy
70dpz
70dqa
70dqb
70dqc
70dqd
70dqe
70dqf
70dqg
70dqh
70dqi
70dqj
70dqk
70dql
70dqm
70dqn
70dqo
70dqp
70dqq
70dqr
70dqs
70dqt
70dqu
70dqv
70dqw
70dqx
70dqy
70dqz
70dra
70drb
70drc
70drd
70dre
70drf
70drg
70drh
70dri
70drj
70drk
70drl
70drm
70drn
70dro
70drp
70drq
70drr
70drs
70drt
70dru
70drv
70drw
70drx
70dry
70drz
70dsa
70dsb
70dsc
70dsd
70dse
70dsf
70dsg
70dsh
70dsi
70dsj
70dsk
70dsl
70dsm
70dsn
70dso
70dsp
70dsq
70dsr
70dss
70dst
70dsu
70dsv
70dsw
70dsx
70dsy
70dsz
70dta
70dtb
70dtc
70dtd
70dte
70dtf
70dtg
70dth
70dti
70dtj
70dtk
70dtl
70dtm
70dtn
70dto
70dtp
70dtq
70dtr
70dts
70dtt
70dtu
70dtv
70dtw
70dtx
70dty
70dtz
70dua
70dub
70duc
70dud
70due
70duf
70dug
70duh
70dui
70duj
70duk
70dul
70dum
70dun
70duo
70dup
70duq
70dur
70dus
70dut
70duu
70duv
70duw
70dux
70duy
70duz
70dva
70dvb
70dvc
70dvd
70dve
70dvf
70dvg
70dvh
70dvi
70dvj
70dvk
70dvl
70dvm
70dvn
70dvo
70dvp
70dvq
70dvr
70dvs
70dvt
70dvu
70dvv
70dvw
70dvx
70dvy
70dvz
70dwa
70dwb
70dwc
70dwd
70dwe
70dwf
70dwg
70dwh
70dwi
70dwj
70dwk
70dwl
70dwm
70dwn
70dwo
70dwp
70dwq
70dwr
70dws
70dwt
70dwu
70dwv
70dww
70dwx
70dwy
70dwz
70dxa
70dxb
70dxc
70dxd
70dxe
70dxf
70dxg
70dxh
70dxi
70dxj
70dxk
70dxl
70dxm
70dxn
70dxo
70dxp
70dxq
70dxr
70dxs
70dxt
70dxu
70dxv
70dxw
70dxx
70dxy
70dxz
70dya
70dyb
70dyc
70dyd
70dye
70dyf
70dyg
70dyh
70dyi
70dyj
70dyk
70dyl
70dym
70dyn
70dyo
70dyp
70dyq
70dyr
70dys
70dyt
70dyu
70dyv
70dyw
70dyx
70dyy
70dyz
70dza
70dzb
70dzc
70dzd
70dze
70dzf
70dzg
70dzh
70dzi
70dzj
70dzk
70dzl
70dzm
70dzn
70dzo
70dzp
70dzq
70dzr
70dzs
70dzt
70dzu
70dzv
70dzw
70dzx
70dzy
70dzz
70eaa
70eab
70eac
70ead
70eae
70eaf
70eag
70eah
70eai
70eaj
70eak
70eal
70eam
70ean
70eao
70eap
70eaq
70ear
70eas
70eat
70eau
70eav
70eaw
70eax
70eay
70eaz
70eba
70ebb
70ebc
70ebd
70ebe
70ebf
70ebg
70ebh
70ebi
70ebj
70ebk
70ebl
70ebm
70ebn
70ebo
70ebp
70ebq
70ebr
70ebs
70ebt
70ebu
70ebv
70ebw
70ebx
70eby
70ebz
70eca
70ecb
70ecc
70ecd
70ece
70ecf
70ecg
70ech
70eci
70ecj
70eck
70ecl
70ecm
70ecn
70eco
70ecp
70ecq
70ecr
70ecs
70ect
70ecu
70ecv
70ecw
70ecx
70ecy
70ecz
70eda
70edb
70edc
70edd
70ede
70edf
70edg
70edh
70edi
70edj
70edk
70edl
70edm
70edn
70edo
70edp
70edq
70edr
70eds
70edt
70edu
70edv
70edw
70edx
70edy
70edz
70eea
70eeb
70eec
70eed
70eee
70eef
70eeg
70eeh
70eei
70eej
70eek
70eel
70eem
70een
70eeo
70eep
70eeq
70eer
70ees
70eet
70eeu
70eev
70eew
70eex
70eey
70eez
70efa
70efb
70efc
70efd
70efe
70eff
70efg
70efh
70efi
70efj
70efk
70efl
70efm
70efn
70efo
70efp
70efq
70efr
70efs
70eft
70efu
70efv
70efw
70efx
70efy
70efz
70ega
70egb
70egc
70egd
70ege
70egf
70egg
70egh
70egi
70egj
70egk
70egl
70egm
70egn
70ego
70egp
70egq
70egr
70egs
70egt
70egu
70egv
70egw
70egx
70egy
70egz
70eha
70ehb
70ehc
70ehd
70ehe
70ehf
70ehg
70ehh
70ehi
70ehj
70ehk
70ehl
70ehm
70ehn
70eho
70ehp
70ehq
70ehr
70ehs
70eht
70ehu
70ehv
70ehw
70ehx
70ehy
70ehz
70eia
70eib
70eic
70eid
70eie
70eif
70eig
70eih
70eii
70eij
70eik
70eil
70eim
70ein
70eio
70eip
70eiq
70eir
70eis
70eit
70eiu
70eiv
70eiw
70eix
70eiy
70eiz
70eja
70ejb
70ejc
70ejd
70

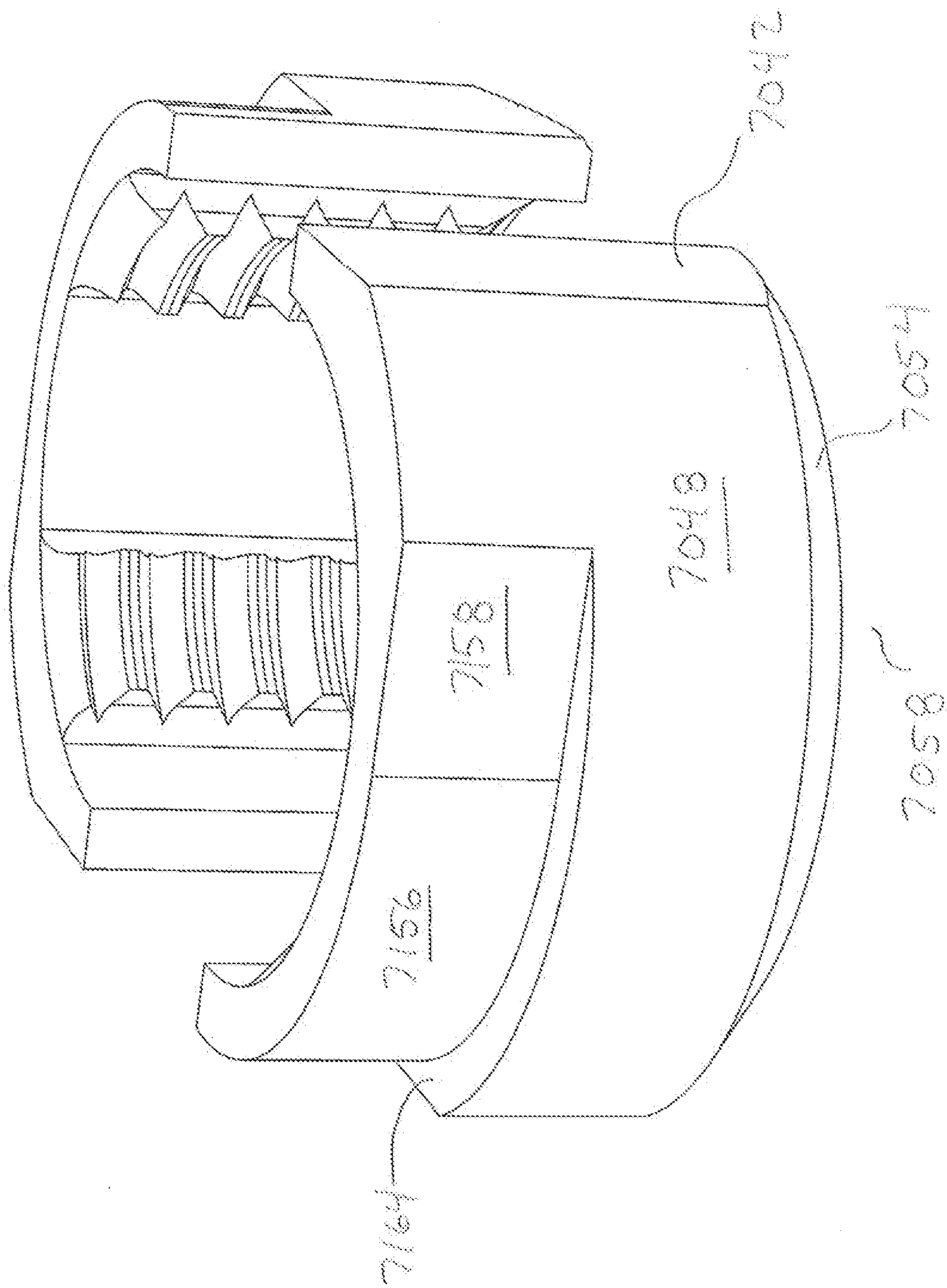

FIG. 38

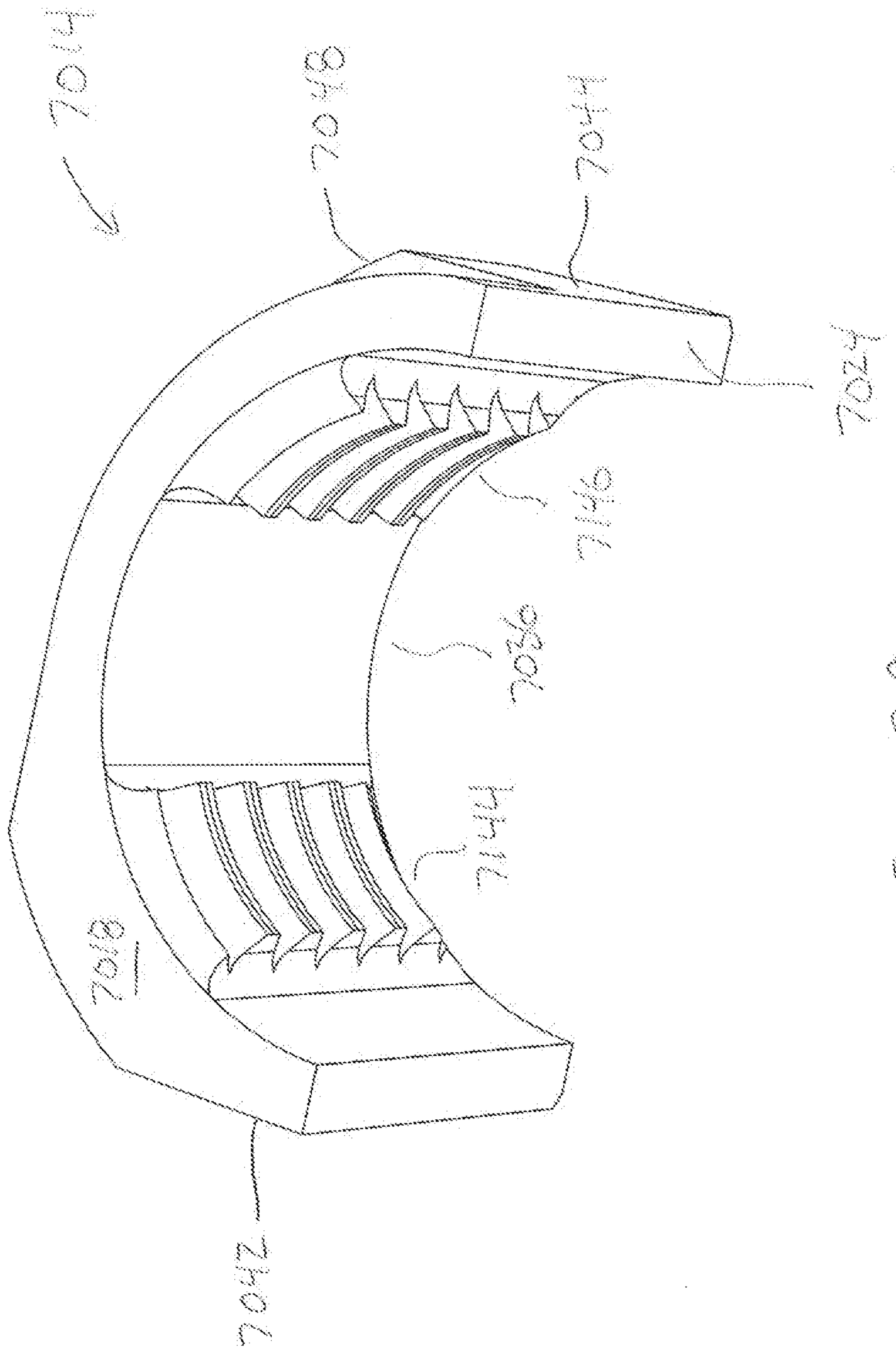

FIG. 13A

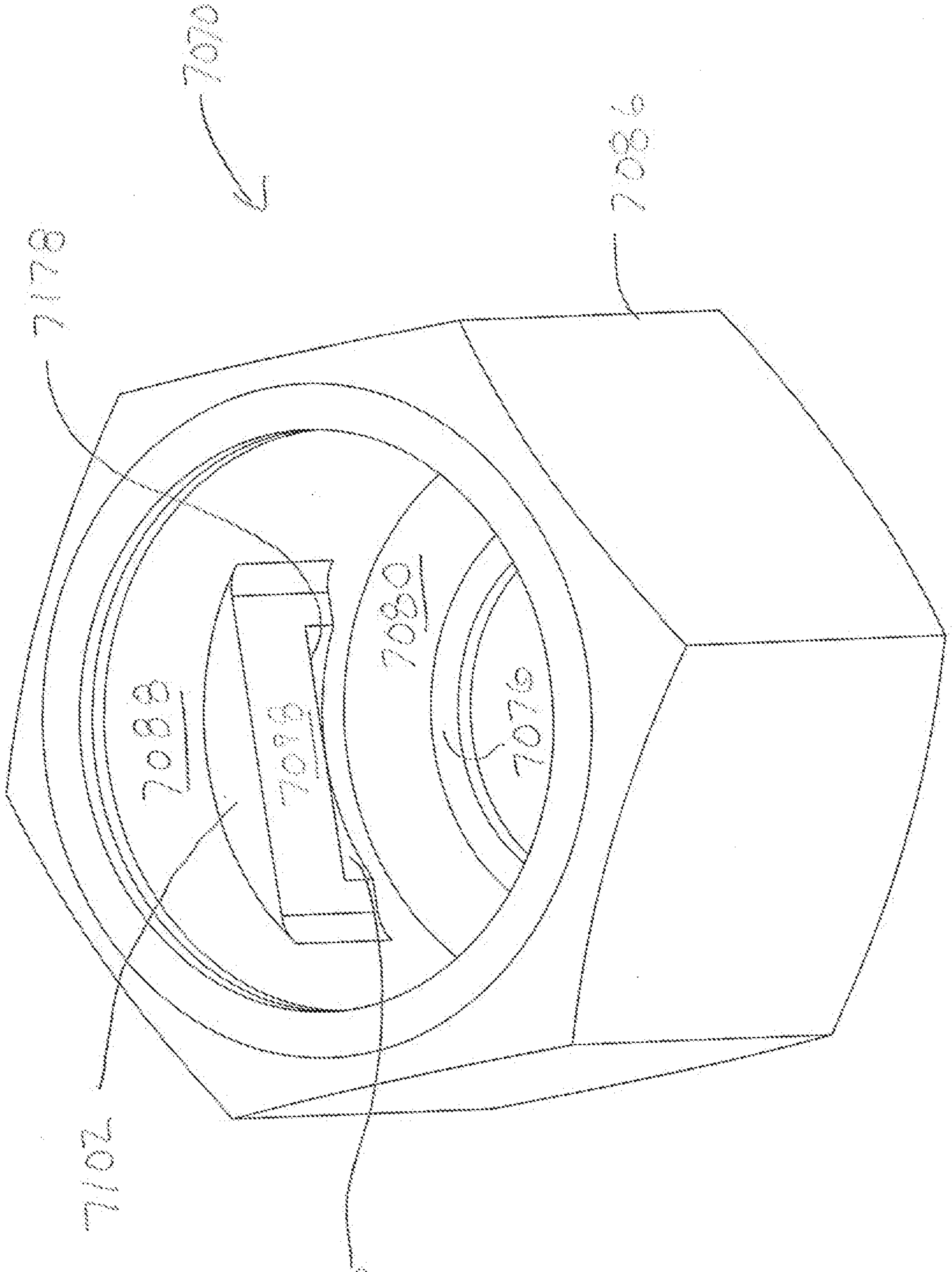

FIG. 40

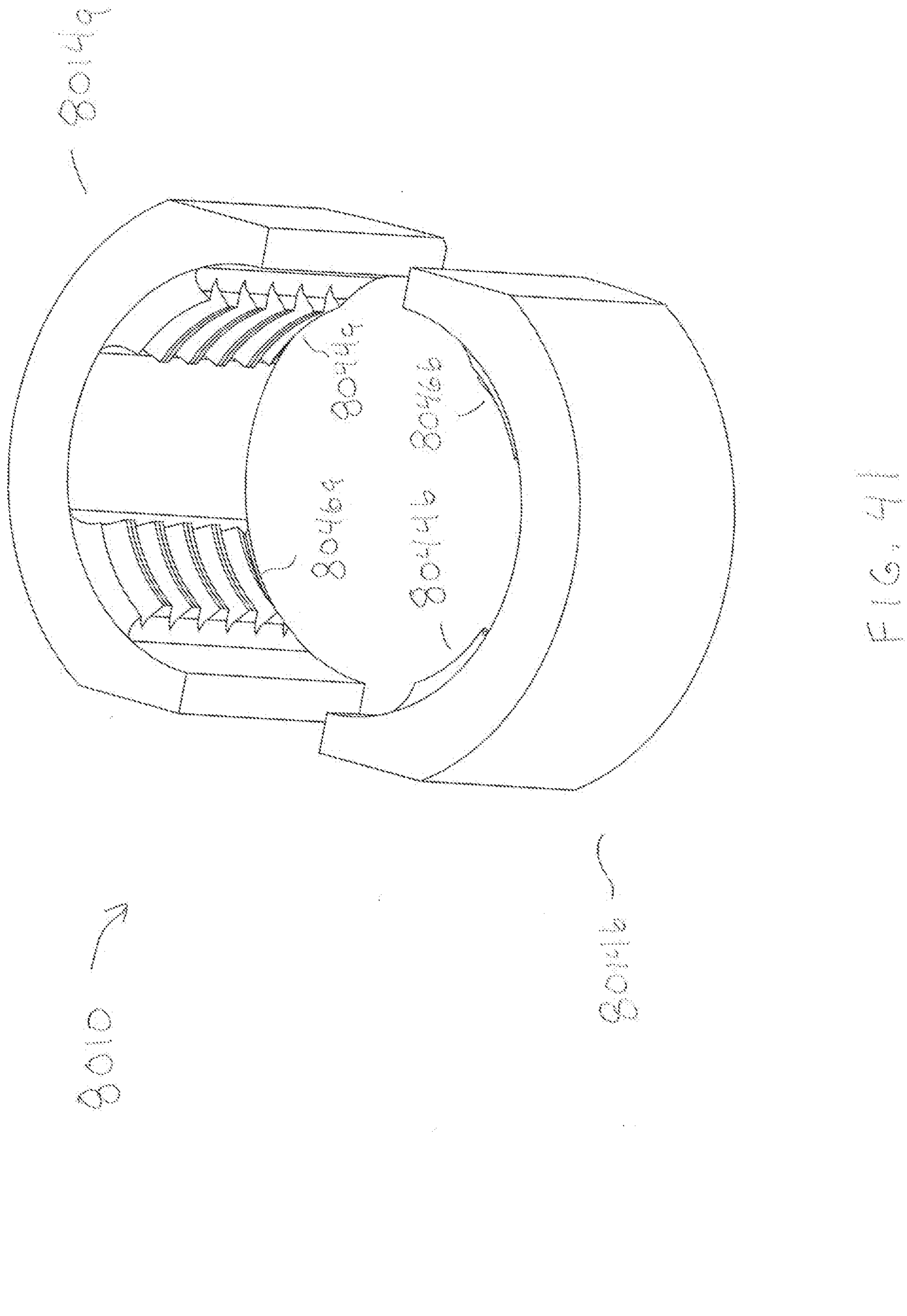

FIG. 8H

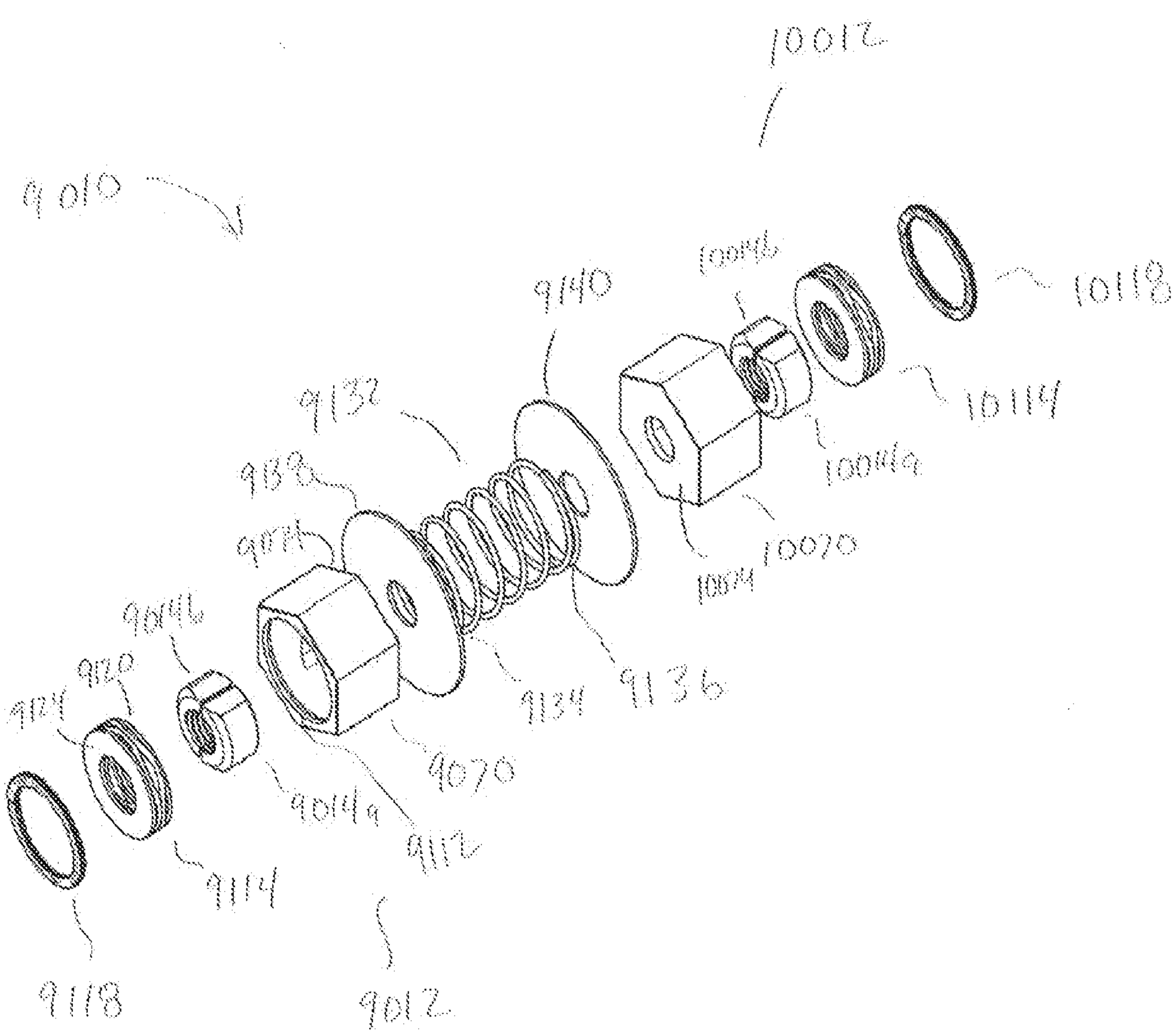
10012
9010
10046
9140
10118
9132
10114
9138
10046a
9044
10070
9044
10074
9136
9134
9120
9124
9070
9014a
9112
9114
9118
9012

FIG. 42

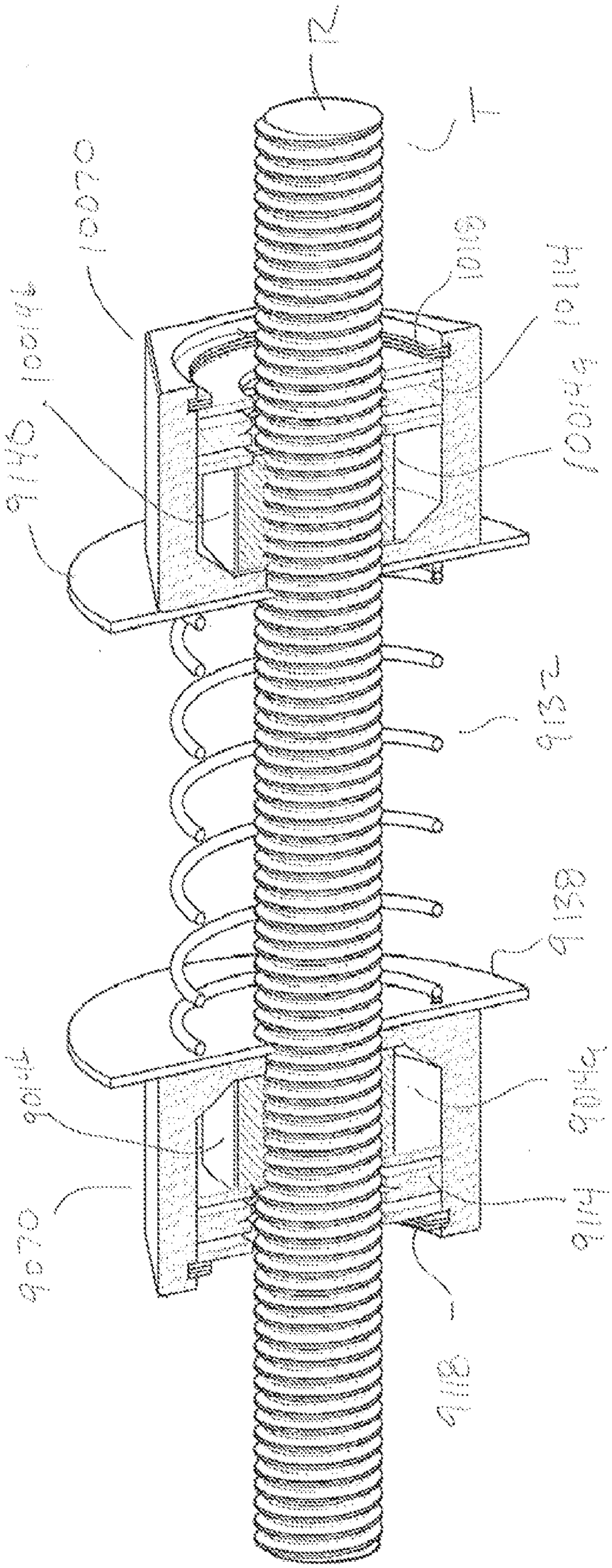

FIG. 9C

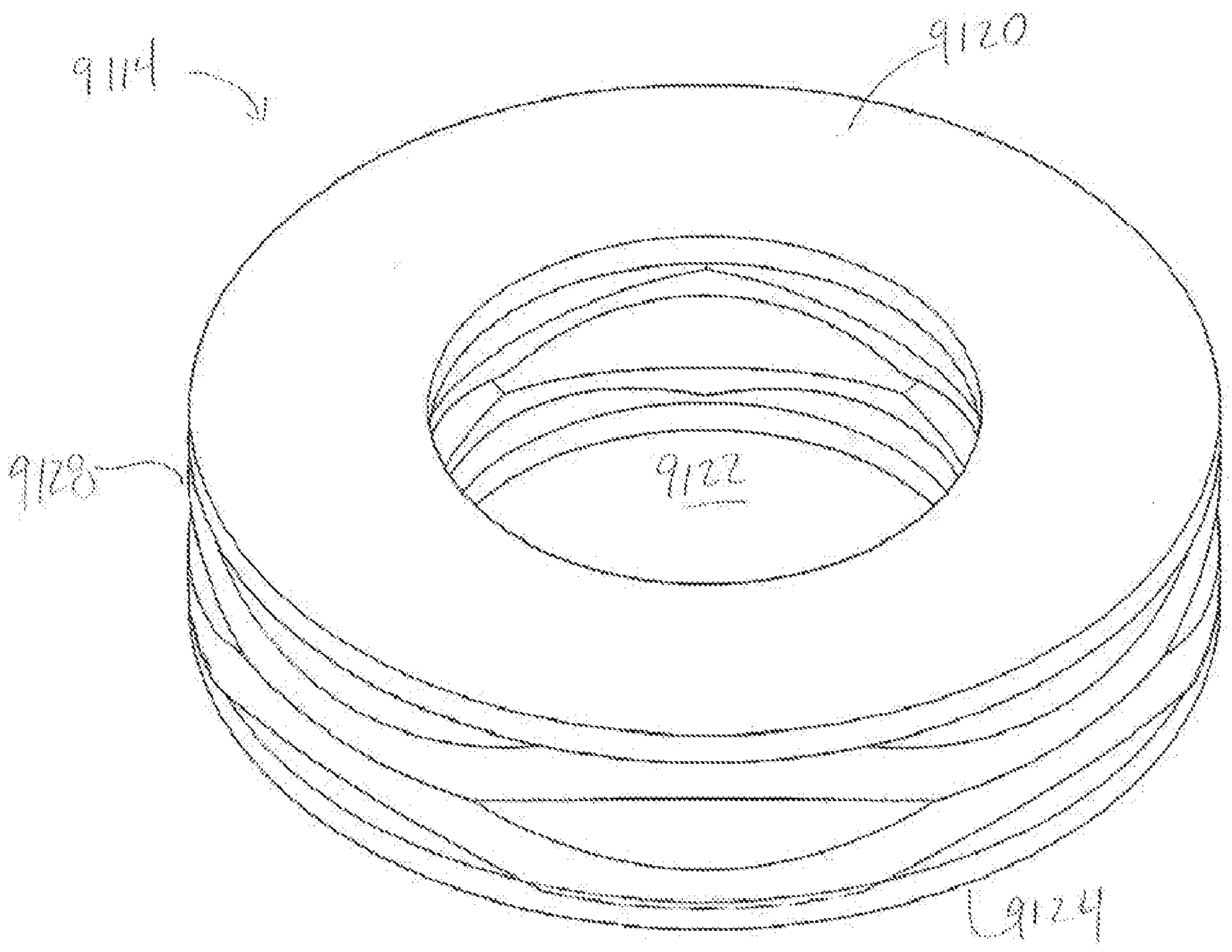

FIG. 44

9118

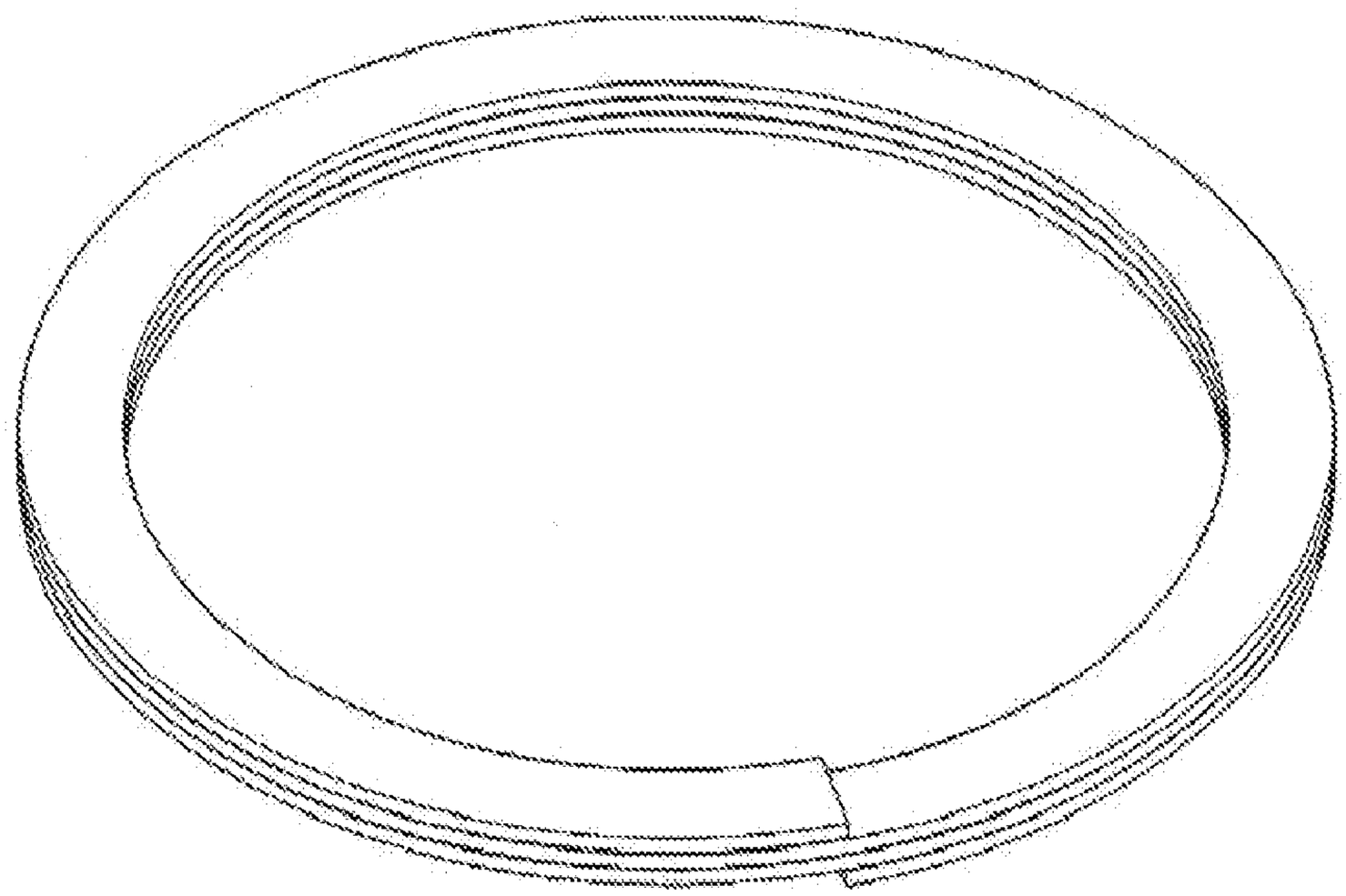

FIG. 45

9118

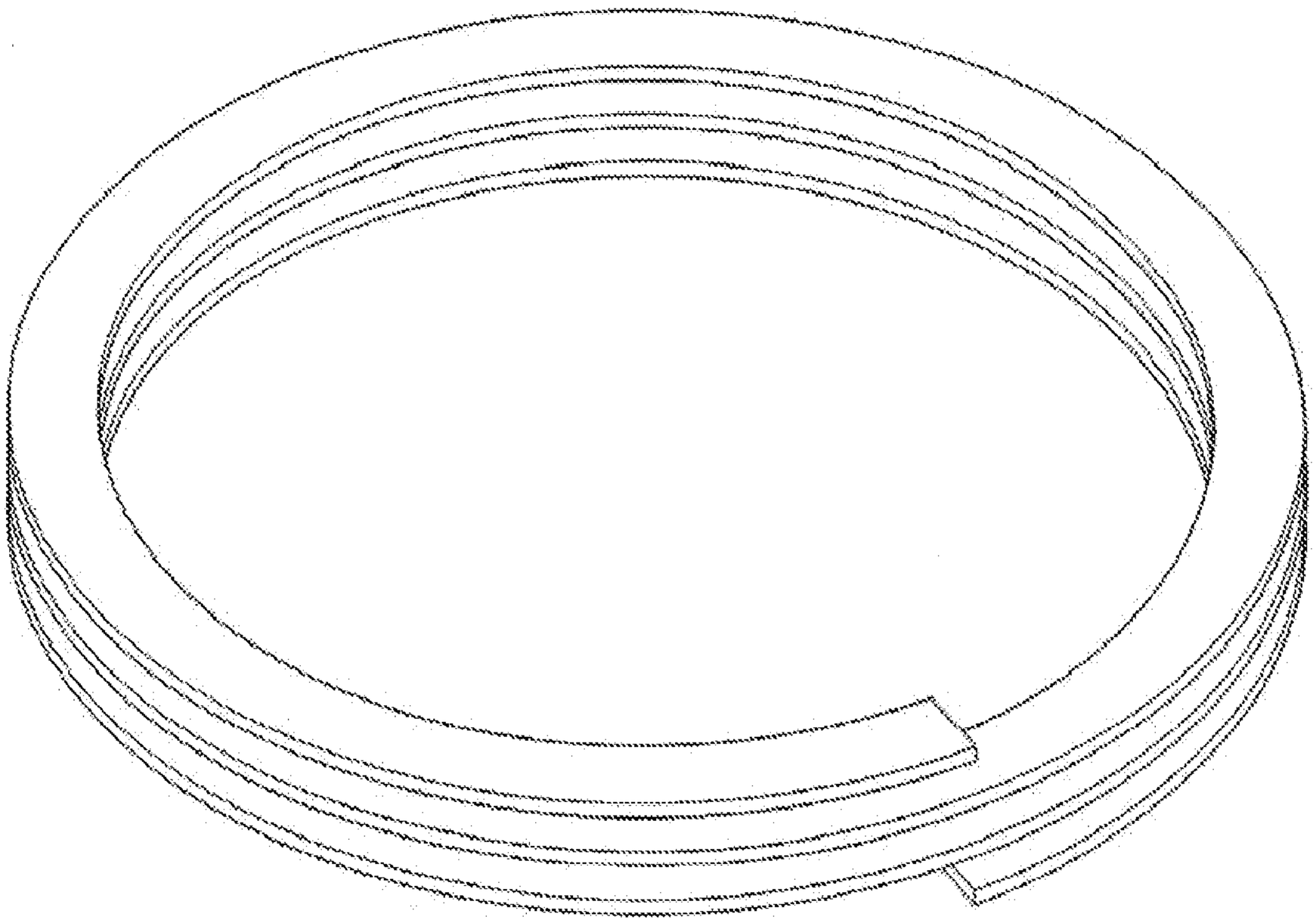

FIG. 46

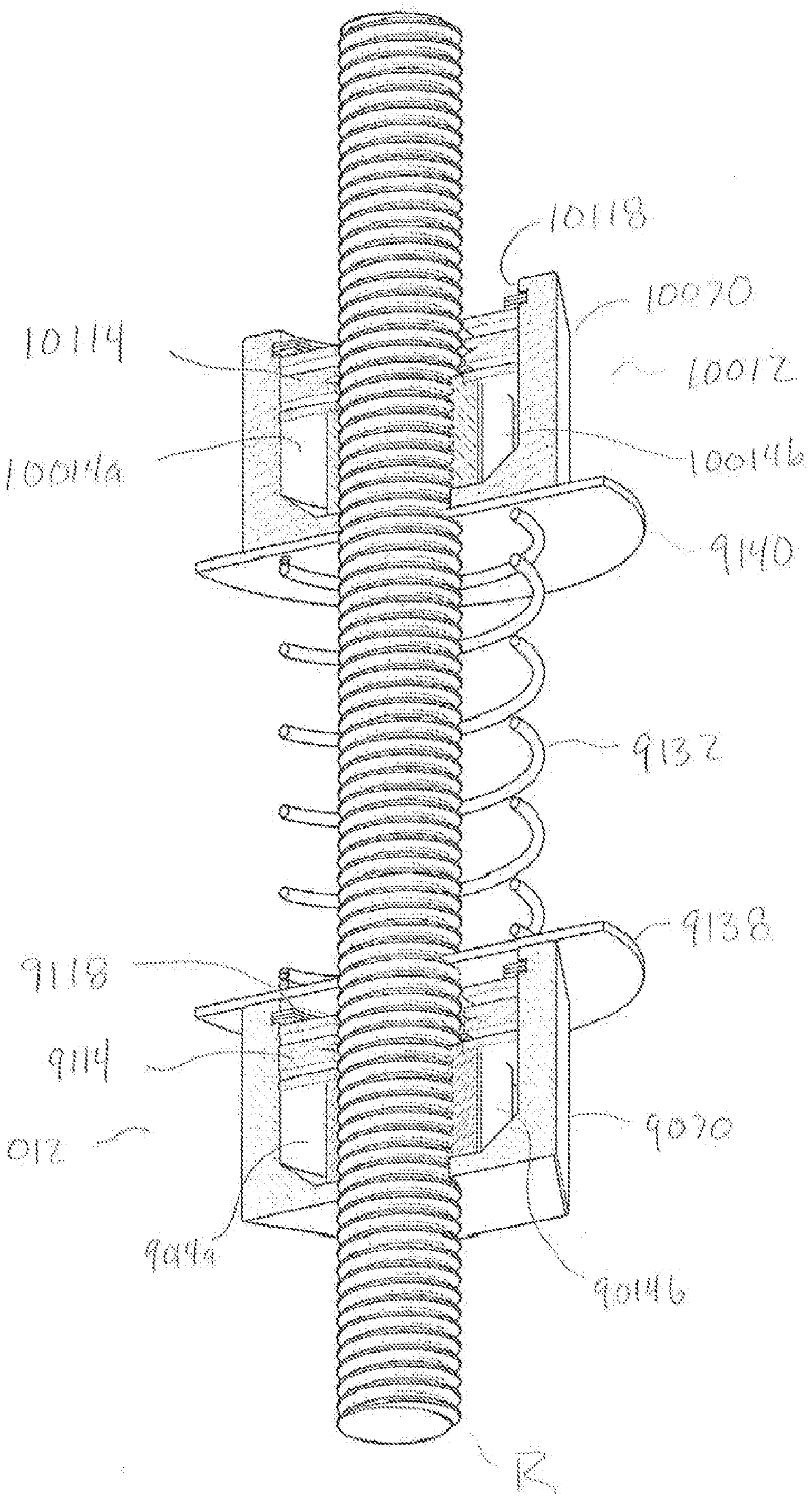
10118
10070
10114
10012
10014a
10014b
9140
9132
9138
9118
9114
9012
9070
9094
9014b
R

FIG. 47

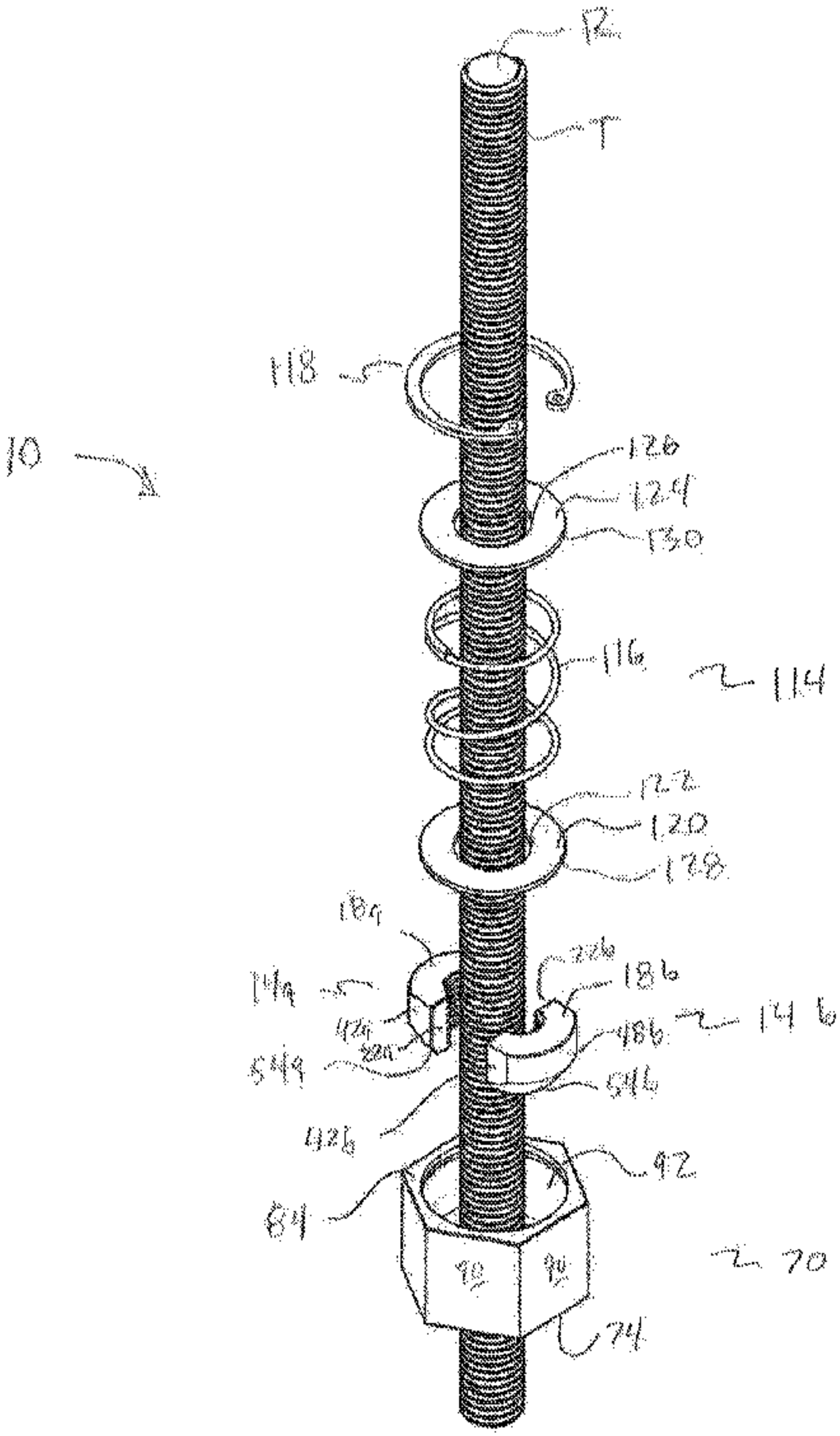
12
T
118
10
126
124
130
116
114
122
120
128
18a
22b
18b
14a
14b
42a
22a
48b
54a
54b
42b
92
84
70
90
90
74

FIGURE 1