Aug. 8, 1961 E. L. AMBLE 2,995,369

AMUSEMENT DEVICE

Filed March 1, 1960 2 Sheets-Sheet 1

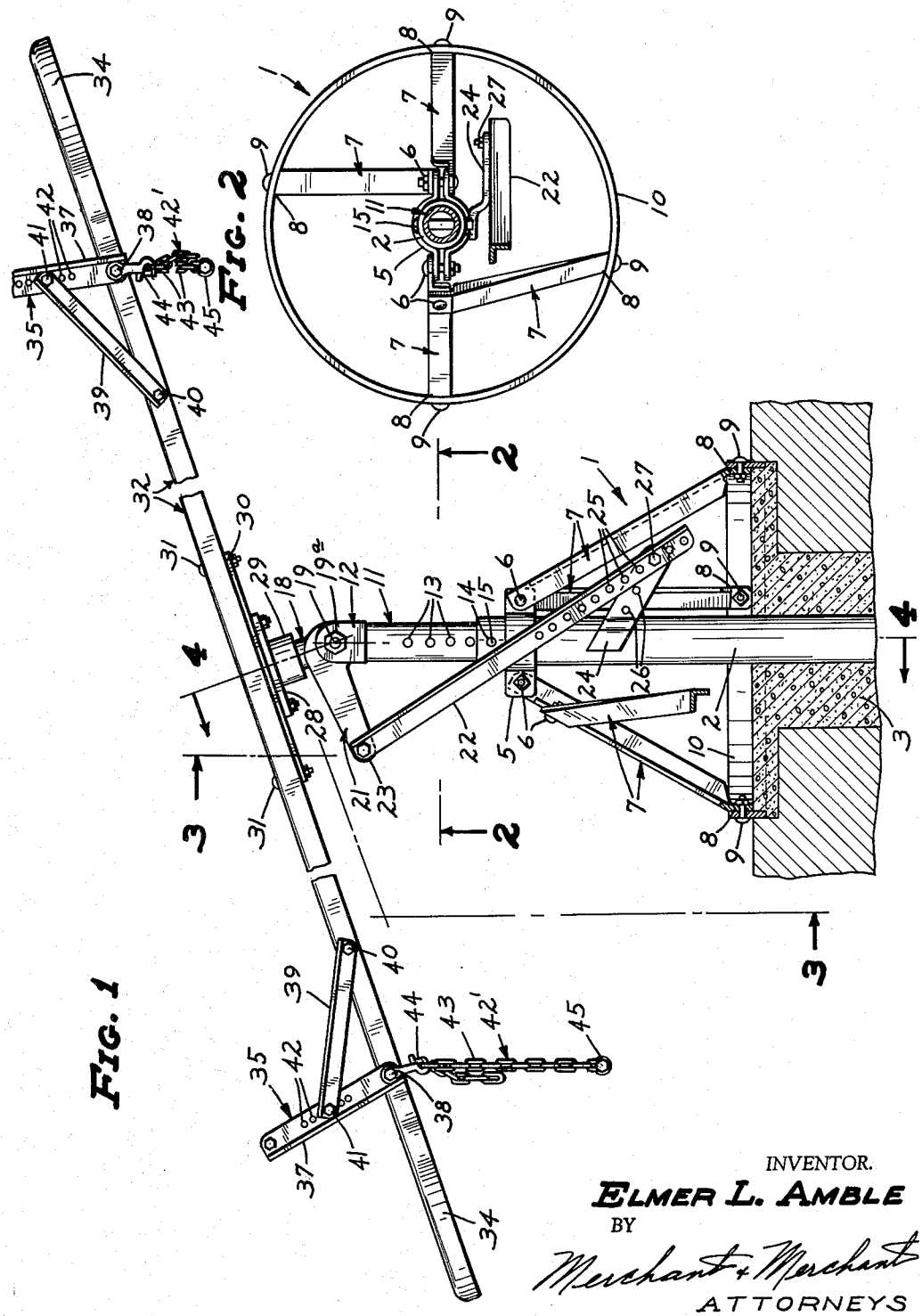

INVENTOR.
ELMER L. AMBLE
BY
Merchant & Merchant
ATTORNEYS

AMUSEMENT DEVICE

Filed March 1, 1960 2 Sheets-Sheet 2

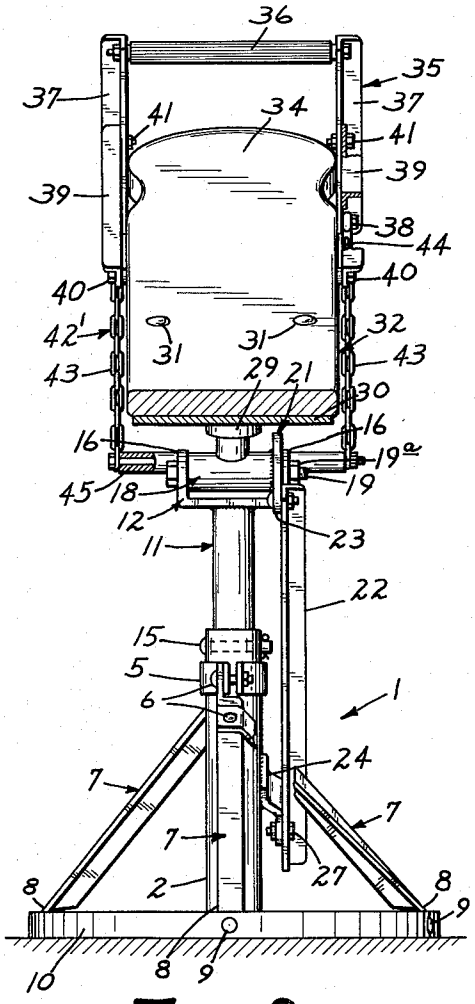

FIG. 3

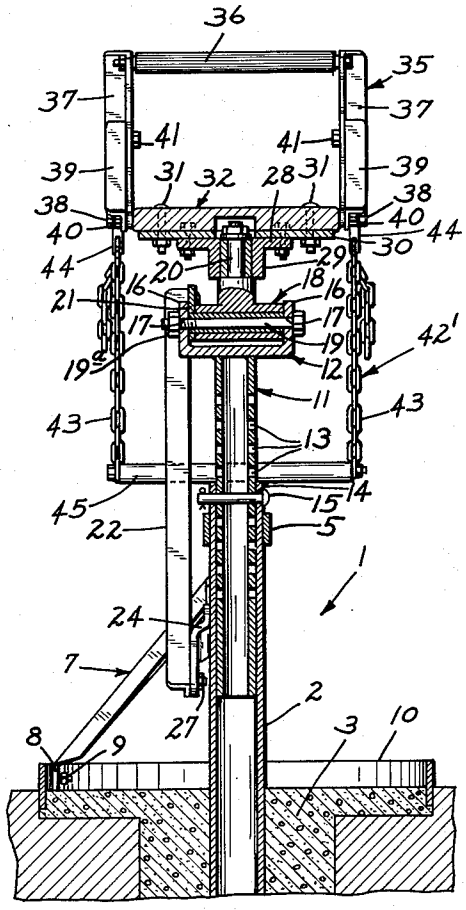

FIG. 4

INVENTOR.
ELMER L. AMBLE
BY
Merchant & Merchant
ATTORNEYS

United States Patent Office

2,995,369

Patented Aug. 8, 1961

1

2,995,369

AMUSEMENT DEVICE

Elmer L. Amble, Blue Earth, Minn.

Filed Mar. 1, 1960, Ser. No. 12,068
2 Claims. (Cl. 272—51)

This invention relates to playground or amusement devices for children, and more particularly to an entertaining merry-go-round device which rotates in an adjustable horizontally inclined plane.

An object of this invention is the provision of an amusement device having an elongated seat board which the riders may cause to rotate in an adjustable horizontally inclined plane merely by adjusting their positions on the seat board.

Another object of this invention is the provision of an amusement device having a novel base and adjustment mechanism upon which the seat board is rotatably supported and adjusted to desired positions.

A further object of this invention is the provision of an amusement device having a new adjustable upstanding handle gripping element associated with both ends of the seat board.

A still further object of my invention is the provision of an amusement device which is beneficial because of its entertaining and exercising usefulness, may be simply but substantially and durably constructed, and is inexpensive to manufacture.

The above and still further objects of my invention will become apparent from the following detailed specification, appended claims and attached drawings.

Referring to the drawings wherein like reference characters indicate like parts throughout the several views:

FIG. 1 is a view in side elevation of my novel invention, some parts shown in section;

FIG. 2 is a view in horizontal section taken on the line 2—2 of FIG. 1;

FIG. 3 is a view in end elevation taken on the irregular line 3—3 of FIG. 1 with some parts shown in section; and

FIG. 4 is a view in vertical section taken on the line 4—4 of FIG. 1.

Referring with greater particularity to the drawings, the reference numeral **1** represents generally the ground supported base of my amusement device. The base **1** includes an elongated cylindrical sleeve **2** supported vertically above the ground by a concrete encasing **3**. Secured to said sleeve **2** near the top **4** thereof is a clamp bracket **5**. Rigidly secured to the clamp bracket **5**, as at **6**, are a plurality of outwardly depending brace members **7**. The lower ends **8** of the said brace members are all rigidly secured, as at **9**, at circumferentially spaced points on an annular ring **10**, which engagingly overlies the ground in concentric relationship to the sleeve **2**. This novel bracing arrangement greatly enhances the rigidity of the sleeve **2**.

Slidably received within the sleeve **2** is an elongated post **11** which has an upwardly opening U-shaped fork **12** on its upper end. The post **11** has a plurality of horizontally opening and vertically spaced apertures **13** which alternately and selectively cooperate with a single aligned horizontally opening aperture **14** near the top **4** of the sleeve **2**. A locking pin **15** is slidably received through the aperture **14** and alternately slidably received within a selected one of the apertures **13**. This locking arrangement permits the post **11** to be adjustably raised and lowered to selected positions as desired.

The fork **12** of the post **11** has opposed upstanding side portions **16** with horizontally alignable apertures **17** therein. Secured within the apertures **17** and pivotable about a horizontal axis defined thereby is an inverted T-member represented generally by the numeral **18** which

2

receives a bolt **19** and a nut **19a** journaled with the apertures **17**. The generally upstanding portion of said T-member forms a vertically inclined spindle **20** which pivots in a generally vertical plane about the horizontal axis defined by said bolt **19**. A laterally outwardly projecting crank arm **21** is rigidly secured to said T-member **18**, and a depending elongated adjustment bar **22** is pivotally secured to the outer end **23** of the crank arm **21**. The bar **22** is associated with a bracket **24** which is rigidly secured to said sleeve **2**. The bar **22** has a plurality of longitudinally spaced apertures **25** which cooperate with and are alternately aligned with a plurality of apertures **26** in said bracket **24**. A suitable fastener **27** is receivable within a cooperating pair of apertures selected from the apertures **25** and **26**, and thereby rigidly connects the bar **22** to the bracket **24** in any desired position so as to selectively adjust the inclination of the spindle **20**.

A bearing plate **28** defining a bearing collar **29** is rotatable upon the spindle **20**. The bearing plate **28** lies in a plane generally normal to the axis of the spindle **20**. A strengthening plate **30** is rigidly secured to the bearing plate **28** and also lies in a plane generally normal to the axis of the spindle **20** and parallel to the above mentioned plane of said bearing plate **28**. Rigidly secured to said bearing plate **28** and to said strengthening plate **30**, by suitable fasteners **31**, is an elongated seat board **32** which rotates about said spindle **20** with said plates **28**, **30**. The opposed ends of said seat board **32** are formed to provide seat portions **34**. Spaced between the seat portions **34** and the bearing plate **28** are a pair of handles represented generally by the numeral **35**. Each handle **35** includes a cross bar **36** and depending side portions **37** which are pivotally secured to the board **32** by means of the lag bolts **38**. Connected to each handle **35** are a pair of knee braces **39** which are pivotally secured to the board **32**, as at **40**, and adjustably secured to the side portions **37** by suitable fasteners **41**. The longitudinally spaced apertures **42** in each side portion **37** of the handles **35** provides a means for selectively adjusting the position of the handles **35** in relation to the rider, not shown. For the purpose of providing stirrups, represented generally by the reference numeral **42'**, for receiving the riders' feet, not shown, a pair of chains **43** are adjustably secured to both seat portions **34** of the board **32** by means of a pair of snap swivels **44** received on the lag bolts **38**, as shown particularly in FIG. 4. Each set of chains **43** is further provided with a cross rod **45**.

Having specifically described my invention, it will be seen that an extremely useful merry-go-round type of amusement device is provided for. By adjusting the inclination of the spindle **20** so that the same is vertically disposed, it should be obvious that the board **32** will rotate in a horizontal plane remote from the ground a distance corresponding to the adjusted height of the post **11** within the sleeve **2**. However, by adjusting the horizontal inclination of the board **32**, as above described, and by adjusting the height of the post **11**, an extremely entertaining amusement device results therefrom. When the board **32** is so inclined from the horizontal, one rider mounts the lower seat portion **34**, and the board **32** is thereafter rotated through 180° and the second rider gets on the board **32**. The rotation of the board **32** is thereafter maintained by the alternative back and forth leaning movements of the riders on their seats **34** which alters the magnitude of the respective moments about the axis of rotation. The rider in the upper position leans back so as to increase his distance from the spindle **20** and the lower rider leans forward toward the center of the board **32** so as to decrease his distance from the spindle **20**. This causes rotation of the riders until their positions are interchanged wherein the same leaning procedure is again

followed so as to cause a constant increase in the moment of the upper rider and a decrease in the moment of the lower rider.

This invention has been thoroughly tested and found to be completely satisfactory for the accomplishment of the above objects; and while I have shown a preferred embodiment thereof, I wish it to be specifically understood that same is capable of modification without departure from the scope and spirit of the appended claims.

What I claim is:

1. An amusement device comprising a ground supported rigid base having a vertically disposed cylindrical sleeve secured thereto, said base comprising said sleeve which is securely anchored in the ground, a ground supported annular ring, and a plurality of vertically inclined brace members connected to the upper outer portion of said sleeve and to said ring, said amusement device further comprising a vertically adjustable post slidably received within said sleeve, means associated with said sleeve and said post for establishing vertical adjustment therebetween, said means comprising a plurality of horizontally opening and vertically spaced apertures defined in said post and alternately cooperating with an aligned horizontally opening aperture defined in the upper portion of said sleeve, and a locking pin slidably receivable in the aperture in said sleeve and alternately slidably receivable within a selected one of the apertures in said post for vertical adjustments therebetween, said amusement device further comprising an upwardly opening U-shaped fork rigidly secured to the upper end of said post, a generally upright spindle journaled within said fork for pivotal movements in a generally vertical plane, means associated with said spindle and said post for imparting adjustable movements to said spindle, the last said means comprising a laterally outwardly projecting crank arm rigidly secured to said spindle, a depending elongated adjustment bar pivotally secured to the outer end of said crank arm and defining means associated with said sleeve for relative adjustment therebetween so as to selectively adjust the inclination of said spindle, said amusement device further comprising a bearing plate rotatable upon said spindle and lying in a plane generally normal thereto, and an elongated seat board rigidly secured to said bearing plate for rotation therewith about the axis of said spindle.

2. The structure defined in claim 1 in further combination with stirrup means secured to opposite ends of said seat board for receiving the feet of the riders.

References Cited in the file of this patent

UNITED STATES PATENTS

1,669,063	Mills	May 8, 1928
2,810,577	Howard	Oct. 22, 1957
2,854,064	Judd et al.	Sept. 30, 1958