Jan. 5, 1965 W. J. MATTOX 3,164,545

DESULFURIZATION PROCESS

Filed Dec. 26, 1962

FIGURE 2

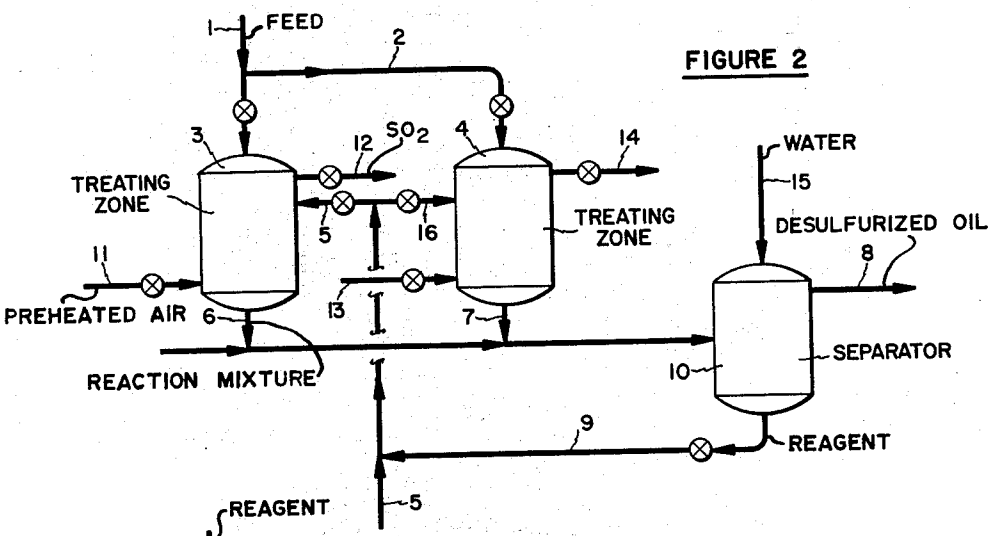

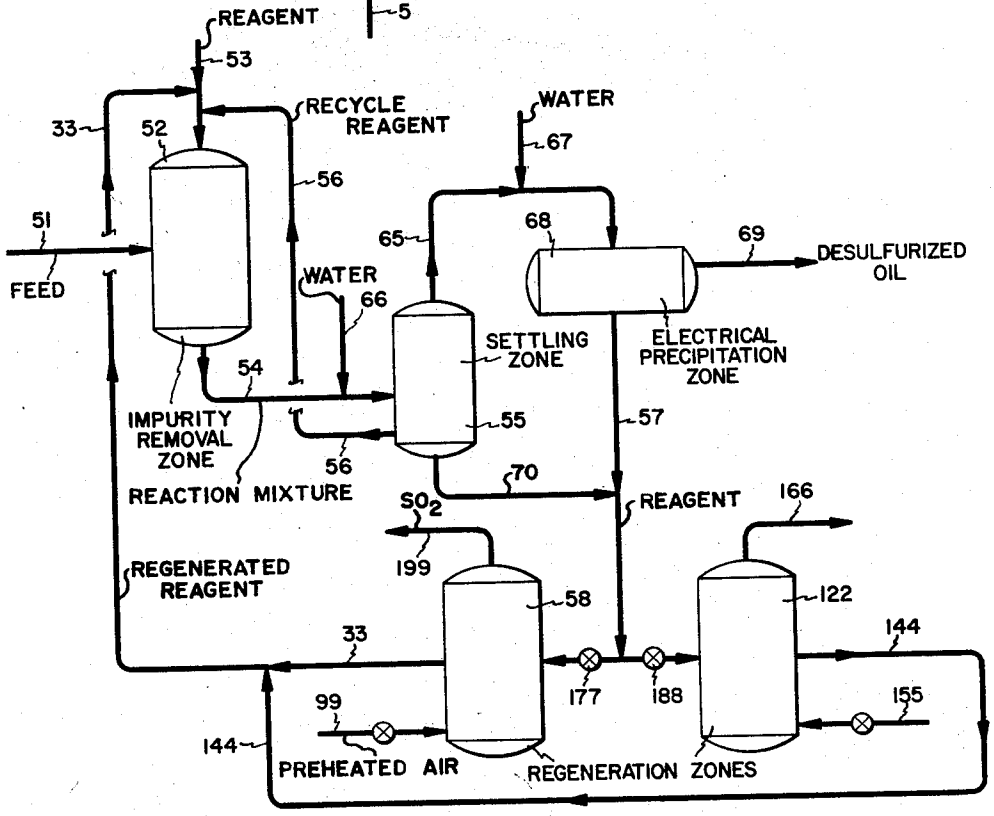

FIGURE 1

William Judson Mattox Inventor

By Perry Carvellas

Patent Attorney

United States Patent Office

3,164,545

Patented Jan. 5, 1965

3,164,545

DESULFURIZATION PROCESS

William Judson Mattox, Baton Rouge, La., assignor to Esso Research and Engineering Company, a corporation of Delaware

Filed Dec. 26, 1962, Ser. No. 246,907
30 Claims. (Cl. 208—230)

The present invention concerns an improved process for removing sulfur, nitrogenous and metallic contaminants from petroleum fractions, such as fuel oil, shale oil, residua, reduced or whole crudes. More particularly, the present invention relates to the use of molten alkali metal hydroxide containing from 5 to 30 wt. percent water, based on total reagent, to remove from heavy petroleum fractions the sulfur, nitrogenous, and metallic contaminants contained therein. In addition, the invention relates to a process for regenerating the molten alkali metal sulfide formed during desulfurization to molten alkali metal hydroxide for reuse as an impurity removal agent. In addition, the invention relates to the removal of impurities from the hydrocarbon fraction by the use of reagents containing molten alkali metal hydroxides in admixture with other metal hydroxides. More particularly, the present invention relates to the conversion of molten alkali metal sulfides, which are formed when desulfurizing with molten (fused) alkali metal hydroxide, to the alkali metal hydroxide by the use of finely-divided solid metals, metal oxides or metal hydroxides.

The problem of sulfur removal from petroleum fractions and crudes goes back to the inception of the petroleum industry. For most purposes, it is undesirable to have an appreciable amount of sulfur in any petroleum product. Gasoline should be relatively sulfur-free to make it compatible with lead. Motor fuels containing sulfur as mercaptans are undesirable because of odor and gum formation characteristics. Sulfur is objectionable in fuel oils because upon combustion sulfur dioxide, a corrosive gas having an obnoxious odor, is formed. Metropolitan areas have been particularly conscious of air pollution problems caused by sulfur-containing fuels and in certain instances have restricted by law the amount of sulfur permissible in fuel oils utilized in the locale.

Generally, sulfur occurs in petroleum stocks in one of the following forms: mercaptans sulfides, disulfides and as part of a more or less substituted ring, of which thiophene is the prototype. The mercaptans are generally found in the lower boiling fractions, e.g., the naphtha, kerosene, and light gas oil. Numerous processes for sulfur removal from these lower boiling fractions have been suggested, such as "doctor" sweetening (wherein mercaptans are converted to disulfides), caustic treating, solvent extraction, copper chloride treating, etc., all of which give a more or less satisfactory decrease in sulfur or inactivation of mercaptans by their conversion into disulfides. When the process results in the latter effect, the disulfides generally remain in the treated product and must be removed by another step if it is desired to obtain a sulfur-free product.

Sulfur removal from higher boiling fractions, however, has been a much more difficult operation. Here the sulfur is present for the most part in the less reactive forms as sulfides, disulfides and as a part of a ring compound, such as thiophene. Such sulfur is, of course, not susceptible to chemical operations satisfactory for removal of mercaptans. Extraction processes employing sulfur-selective solvents are also unsatisfactory because the high boiling petroleum fractions contain such a high percentage of sulfur-containing molecules. For example, even if a residuum contains only about 3% sulfur it is estimated that substantially all of the molecules may contain sulfur. Thus, if such a residuum were extracted with a solvent selective to sulfur compounds the bulk of the residuum would be extracted and lost.

Metallic contaminants, such as nickel and vanadium compounds, are found as innate constituents in practically all crude oils. These contaminants present another problem. Upon fractionation of the crudes, the metallic contaminants are concentrated in the residua which normally have initial boiling points of about 1000° F. Such residua are conventionally used as heavy fuels, and it has been found that the metal contaminants therein adversely affect the combustion equipment in which the residua are burned. The contaminants not only form ash, which leads to sludging and the formation of deposits upon boiler tubes, combustion chamber walls, the gas turbine blades, but also attack the refractories which are used to line boilers and combustion chambers and severely corrode boiler tubes and other metallic surfaces with which they come into contact at high temperatures.

The nitrogenous compounds are found in many crude oils to a varying extent depending on the source. These compounds are objectionable primarily due to (1) their tendency to promote instability in the finished, marketable products, such as gasoline, kerosene, heating oil, jet fuels and the like regardless of whether these are obtained by simple distillation procedures or by cracking heavier fractions and (2) due to their adverse effects on the activity of catalytic materials used in cracking reactions, etc.

In the past, methods to chemically remove the sulfur have been ineffective to remove large amounts of sulfur and furthermore, had little or no effect on the nitrogenous or metallic impurities, these materials requiring other methods for their removal.

It is an object of the instant invention to provide an improved method for removing sulfur, metallic and/or nitrogenous impurities from petroleum fractions, even the heavier petroleum fractions, such as heavy fuel oils, residuum, etc. It is an object of the instant invention to provide a process for regenerating alkali metal sulfide to the alkali metal hydroxide for subsequent recycle within the desulfurization system.

It has now been discovered that the above objects may be accomplished by contacting the petroleum fraction with molten alkali metal hydroxide containing from about 5 wt. percent to about 30 wt. percent water, based on total reagent, under temperature conditions within the range of about 300° F. to 800° F.

It has been found that the potassium hydroxide in admixture with barium hydroxide will also effectively remove the sulfur, metallic and nitrogenous impurities in the petroleum fraction. It has further been found that cesium hydroxide in admixture with other agents, such as barium hydroxide, potassium hydroxide, and sodium hydroxide will also effectively remove the sulfur, metallic, and nitrogenous impurities in the petroleum fraction.

It has further been found that the addition of a solutizer selected from the group of compounds which may be

described as oil-soluble organic compounds of carbon, hydrogen, and oxygen which form alkali metal compounds, such as alcohols, phenols, alpha and beta naphthols, isobutyric acid, etc., also improves the action of the molten reagents of the instant invention.

It has also been discovered that by contacting the spent molten alkali metal hydroxide phase containing the alkali metal sulfides with a finely-divided metal, metal oxide or metal hydroxide that the alkali metal sulfide is converted to the alkali metal hydroxide. These metals, metal oxides or metal hydroxides may be present during the desulfurization step, i.e., when the petroleum fraction is intimately contacted with the molten alkali metal hydroxide. It appears that the metals, metal oxides or metal hydroxides take the sulfur from the alkali metal sulfides and become metal sulfides. The latter, in turn, may be regenerated back to the metals, metal oxides or hydroxides by various methods known to the art, for example, high temperature roasting.

As used herein "metals," "metal oxides" or "metal hydroxides" will be the three generic groups of materials which are suitable for use in the present invention. The metals, or mixtures thereof, which are suitable include copper, nickel, iron, manganese, cobalt, calcium, magnesium, molybdenum, lead, tin, zinc, tungsten, antimony and bismuth. Oxides of these metals, or mixtures thereof, would be suitable metal oxides within the meaning of this application. The hydroxides of the above metals, or mixtures thereof, are suitable metal hydroxides in the instant process. It will be understood that these metals, metal oxides or metal hydroxides may be used in admixture with one another.

FIGURE 1 is a diagrammatic representation of an embodiment of the instant invention wherein the sulfur-containing oil is contacted with molten alkali metal hydroxide and said spent molten hydroxide is subsequently contacted in another zone with a finely-divided metal, metal oxide or metal hydroxide for regeneration.

FIGURE 2 represents another embodiment of the present invention wherein the oil and molten alkali metal hydroxide are contacted in the presence of the finely-divided metal, metal oxide or metal hydroxide for simultaneous desulfurization and regeneration.

In accordance with the present invention, a feed, such as a 950° F.+ Kuwait residum, is obtained from a suitable source and directed via line **51** to impurity removal zone **52**, where it is contacted with molten alkali metal hydroxide containing 5 to 30 wt. percent water based on total reagent entering through line **53**. The residium and molten alkali metal hydroxide containing water are intimately mixed which cause the sulfur, metallic and nitrogenous impurities in the residuum to react with the molten alkali metal hydroxide and to form products which may be removed from the hydrocarbon oil, thus yielding a high quality product. Although impurity removal zone **52** shown in the drawing is a batch step, it is to be understood that this step may be conducted continuously, for example, by countercurrently contacting the molten alkali metal hydroxide containing water with the residuum or other feed being treated.

The amount of water in the molten alkali metal hydroxide is important for the improved results of the instant invention. The water content should be within the range of about 5 to 30 wt. percent based on total reagent, preferably 7–25% and more preferably 10 to 20 wt. percent. The most preferred water content is about 15 wt. percent. Temperature conditions during the contacting step should be maintained within the range of 300 to 900° F., preferably 350 to 800° F., more preferably 550 to 750° F. The amount of molten alkali metal hydroxide reagent (including water) may be within the range of 25 to 200 wt. percent of the feed being treated, preferably 50 to 150 wt. percent. It is to be understood that only a very small proportion of the hydroxide reagent is converted to alkali metal sulfide and thus the reagent is suitable for use in treating additional oil before regeneration is required. Usually, these ratios will represent a large excess of reagent over that required to remove sulfur so that at least a portion of the reagent withdrawn through line **56** may be recycled directly to the treating zone with an appropriate side stream being passed to the regeneration zone. Treating time may be as little as $\frac{1}{10}$ hour to 16 hours, generally the longer the time of contact, the greater the impurity removal. It is preferred to employ treating times within the range of ¼ to 6 hours. The pressure may vary from 0 to 500 p.s.i.g., depending on the hydrocarbon feedstock, and is not critical to the desulfurization reaction.

The mixture of alkali metal hydroxide and hydrocarbon material leaves the impurity removal zone through line **54** and passes to settling zone **55** wherein the unreacted molten alkali metal hydroxide containing water separates as a distinct phase from the treated residuum phase, which will contain varying proportions of the reaction products of the impurities and the molten alkali metal hydroxide containing water.

A small amount of water and/or a distillate fraction, such as gasoline, heavy naphtha, kerosene, heating oil, etc., or any suitable fraction boiling below about 700–800° F. may be introduced through lines **66** and **67** to facilitate oil-reagent separation. This step will not usually be required except in treating very heavy, viscous, residual type oils.

Part of the molten alkali metal hydroxide phase recovered from settling zone **55** may be directed via lines **56** and **53** back to zone **52** for reuse while part is passed through lines **70** and **57** to regeneration zone **58** or **122**. The hydrocarbon phase passing from zone **55** through line **65** may contain some of the alkali metal hydroxide reagent and some of the inorganic reaction products formed in the impurity removal zone **52**. Wash water is introduced through line **67** to extract these materials and in electrical precipitation zone **68**, or in some other suitable separation equipment, the aqueous extract phase is separated from the treated oil, which desulfurized oil is removed through line **69**. If the extract water from zone **68** contains the alkali metal sulfide as the main impurity, this material is combined with the spent caustic from line **70** and passed to regeneration zone **58** via line **57** for reconversion to alkali metal hydroxide. Heavy metal impurities, such as nickel, vanadium, etc., which may be present in the aqueous extract from zone **68**, can conveniently be removed by ion exchange, selective precipitation, filtration, etc. (not shown), before passage to zone **58**.

Settling zone **55** will preferably be maintained near or below the temperature held in impurity removal zone **52** in order to facilitate gravity separation of oil and reagent and prevent heat loss from the caustic entering regeneration zone **58**.

A solutizer may be present during the impurity removal step. For example, it may be added to zone **52** or mixed with the feed or the molten alkali metal reagent prior to their entering the impurity removal zone. These compounds consist of oil-soluble organic compounds of carbon, hydrogen, and oxygen which form alkali metal compounds in the presence of strong alkali and may be used in concentrations of about 0.1 to 10 wt. percent based on the oil. Suitable solutizers are those known in the art, such as, beta-naphthol phenols, alcohols and naphthenic acids and the like. These materials will be recovered in the spent caustic removed from zone **55** and in the aqueous phase from zone **68**. Quantities of nitrogen may be removed from the system as NH_3 or other volatile compounds through line **69** with the treated oil.

The recovered molten alkali metal sulfide is passed to regeneration zone **58** for conversion to alkali hydroxide in the manner discussed herein below.

In regeneration zone **58** the spent molten alkali metal hydroxide containing the alkali metal sulfide is contacted in the presence of 5 to 30 wt. percent, based on total

amount of metal sulfide and hydroxide compounds present, with a finely-divided metal, metal oxide or metal hydroxide heretofore indicated suitable for the instant process. The alkali metal sulfide reacts with the metal, metal oxide or metal hydroxide to form a metal sulfide and the alkali metal hydroxide. Regeneration zone **58** may be operated in many different ways depending upon the regenerating agent employed. If the metal, metal oxide or metal hydroxide is used in zone **58** as a finely-divided, dry solid, any suitable method for contacting solids and liquids may be employed whether it be a continuous or essentially batch operation. In the embodiment shown in FIGURE 1 the solid metal, metal oxide or metal hydroxide is in a fixed-bed through which the spent molten alkali metal hydroxide passes. In this embodiment the spent hydroxide, in passes through the fixed bed, is regenerated by the contact with the metal, metal oxide or metal hydroxide. The regenerated hydroxide is withdrawn from zone **58** through line **33** and recycled via line **53** to impurity removal zone **52**.

The conversion of the alkali metal sulfide to the alkali metal hydroxide employing the metal, metal oxide or metal hydroxide may be performed within the temperature range of about 200 to 1000° F. The quantity of water present will vary but will be optimum when present in amounts in excess of that required by the stoichiometry of the reaction involved, but between about 5 to 30 wt. percent based on total amount of metal sulfide and hydroxide compounds present. Additional water may be added to make up for that used in the hydrolysis reaction. Contact times of about ¼ to 4 hours will be suitable.

When a fixed-bed of metal oxide has been used, such as in FIGURE 1, the metal sulfide may be converted back to the metal oxide by roasting the metal sulfide in the presence of air to form the metal oxide and sulfur dioxide. The preheated air is introduced in lines **99** or **155** in a conventional manner, depending on the zone being regenerated, and the sulfur dioxide in admixture with excess air is withdrawn via line **199** or **166**. The roasting is conducted at temperatures within the range of 1000 to 3000° F. If carbonates have formed during the desulfurization and regeneration processes, they are decomposed during the roasting and converted to their metal oxides. The temperature must be high enough so that the metal sulfide goes to the oxide rather than the sulfate or another oxidized form. Pressure will be approximately atmospheric. With most materials preferred temperatures will be about 1200 to 1800° F.

Another embodiment of the invention is shown in FIGURE 2 wherein the desulfurization is conducted in the presence of metal, metal oxide or metal hydroxide for simultaneous desulfurization and regeneration of the molten alkali metal hydroxide. The impurity-containing oil is obtained from a suitable source and directed via line **1** to treating zone **3**. Treating zone **3** contains therein a fixed-bed of suitable finely-divided metal, metal oxide or metal hydroxide. The oil mixes with molten alkali metal hydroxide containing about 5 to 30 wt. percent water entering via line **5** and is desulfurized. The mixture of oil, alkali metal sulfide and hydroxide pass through the fixed bed of metal, metal oxide or metal hydroxide, wherein further desulfurization may occur, but principally the alkali hydroxide is regenerated and the metal, metal oxide or metal hydroxide converted to a metal sulfide. The operating conditions during the contacting with the alkali metal hydroxide and the metals will be within the range of 300 to 900° F. The weight ratio of alkali metal hydroxide to oil being treated may vary from about 10 to 200%, preferably about 50 to 150%. The water content of the caustic is an important factor in producing fluidity and for maintaining maximum activity of the desulfurization as well as of the regeneration processes. About 5 to 30 wt. percent water based on total reagent

may be present, with preferred quantities in the approximate range of 10 to 20%. Treating or contacting times may vary within the range of about 1/10 to 16 hours, preferably ¼ to 6 hours, but with efficient contacting in zone **3** these times may be maintained at less than about 4 hours.

The mixture of oil and alkali metal hydroxide is withdrawn through line **6** and sent to separator **10** wherein the oil and alkali metal hydroxide separate into two distinct liquid phases and are withdrawn by lines **8** and **9**, respectively. The temperature in separator **10** will be maintained at approximately near or slightly below that in treating zone **3** in order to facilitate separation of phases and minimize loss of heat from the alkali metal hydroxide which is recycled to line **5** for reuse during the desulfurization step. Make-up water for the system is introduced through line **15** and is required as a result of operating losses, solubility or dispersion in the treated hydrocarbon phase, and for reaction with certain metals or metal oxides in zone **3** to carry out the hydrolysis reaction. For example, the reaction

$$K_2S+FeO+H_2O\rightarrow 2KOH+FeS$$

requires one mol of water for each mol of sulfur removed. Introduction of water at this point also facilitates oil separation from alkali metal hydroxide in separator **10**, especially when processing heavy, viscous oils. When desulfurizing very heavy oils, such as residua, it may also be desirable to introduce a lower boiling diluent oil or naphtha through line **15** or at some other appropriate point in order to facilitate separation in zone **10**. This diluent oil may then be removed with the treated product withdrawn through line **8** and separated if desired by distillation, etc.

When the fixed-bed in treating zone **3** has been sufficiently converted to metal sulfide by reaction with the alkali metal sulfide such that it is no longer effective in regenerating the alkali metal hydroxide, the feed is diverted to flow through line **2** and into treating zone **4**. This may be effected easily by closing the valve in line **1** and opening the valve in line **2**. Likewise, the valve in line **5** is closed and line **16** is opened to allow the alkali metal hydroxide to flow into treating zone **4**, which is identical to treating zone **3**. The mixture of oil and alkali metal hydroxide is withdrawn via line **7** and passes through line **6** to separator **10**.

While treating zone **3** is off-stream, the fixed-bed therein is regenerated in any of the methods discussed hereinbefore. Where the bed is roasted to convert the sulfide to the oxide, lines **11** and **13** provide means for introducing preheated air into the respective treating zones. Likewise, the mixture of air and sulfur dioxide product is withdrawn through lines **12** and **14** of their respective treating zones.

Although the simultaneous contacting of the oil with the alkali metal hydroxide and the finely-divided metal, metal oxide or metal hydroxide has been discussed in relation to a fixed-bed of the metal, it will be remembered that any type of contacting may be employed, whether it be a continuous or batchwise process. For example, the finely-divided metal, metal oxide or metal hydroxide may be agitated with the mixture of oil and molten alkali metal hydroxide and the solids separated therefrom by filtration or settling, while the two liquid phases are separated by decanting.

The molten KOH reagent in the instant invention may be used in admixture with barium hydroxide, barium hydroxide monohydrate or mixtures thereof. The proportion of barium hydroxide, etc., to potassium hydroxide may vary widely, but usually will be within the range of about 5 to 50 wt. percent of total reagent. Such mixed reagents may be used not only to promote the desulfurization reaction but also to increase the rate of hydrolysis of sulfide to hydroxide since barium sulfide is more easily

hydrolyzed than the potassium sulfides. In general, the operating conditions employed in impurity removal zone 2 will not differ greatly from that ordinarily used for molten KOH. Approximately the same levels of water content of 5 to 30 wt. percent in the reagent will also be employed.

hydrocarbon was added to facilitate separation of oil from potassium hydroxide and the diluent removed from the treated product by distillation. In some instances where K_2S remained suspended in the oil, the sulfide was decomposed with acid preceding the removal of the xylene. The results are shown in Table I below:

Table A–I

EFFECT OF OPERATING CONDITIONS ON DESULFURIZATION AND DEMETALIZATION WITH MOLTEN KOH-H_2O MIXTURE

Test No.	Wt. Percent H_2O in KOH-H_2O Mixture	Wt. percent KOH on Feed	Temp., ° F.	Treat. Hours	Percent Desulfurization	Percent V Removed
EFFECT OF AMOUNT OF KOH-H_2O MIXTURE						
1	15	34	600	4	31	
2	15	100	600	4	47	
3	15	200	600	4	46	
EFFECT OF WATER CONTENT ON MOLTEN KOH						
	2	100	600	4	<10	
4	7	100	600	4	23	60
5	15	100	600	4	47	100
6	25	100	600	4	31	55
EFFECT OF TEMPERATURE						
7 [1]	15	100	550	4	31	100
8	15	100	600	4	47	100
9	15	100	650	3.3	64	100
EFFECT OF TREATING TIME						
10	15	100	600	1	28	
11	15	100	600	4	47	
12	15	100	600	16	60	

[1] These data also illustrate the water retentive characteristics of KOH at different temperatures as little or no water was lost from the molten reagent during treatment.

The cesium hydroxide of the instant invention may be used in admixture with molten potassium hydroxide, molten sodium hydroxide, molten alkaline earth metal hydroxides, such as barium hydroxide and barium hydroxide monohydrate, or mixtures thereof. For example, a cesium hydroxide-barium hydroxide reagent which contains only 2.9 mol percent of CsOH is very active for desulfurization whereas the barium hydroxide alone has no significant activity. Cesium hydroxide may be employed in these mixtures in relatively small amounts of about 1 to 20 mol percent, based on total reagent, to produce active contaminant removal reagents from alkali or alkaline earth metal hydroxides that would be less expensive than a reagent which consisted solely of cesium hydroxide.

The following examples illustrate embodiments of the present invention.

EXAMPLE 1

Batch tests were made on a 950° F.+ Kuwait residuum containing 5.2 wt. percent sulfur with molten KOH containing water to determine the effect of varying the amount of KOH, the water content thereof, the temperature conditions and the treating time. The individual tests were conducted by adding the indicated amount of potassium hydroxide to the oil at 300 to 400° F. with stirring, increasing the temperature to the designated level and maintaining it there for the specified time with continuous high speed, mechanical stirring. After cooling to about 250–300° F., xylene or other comparable

From the above table it is clear that these variables all affect the desulfurization of the residuum. Thus is is necessary that the amount of molten KOH reagent be within the range of 25 to 200 wt. percent of feed being treated, preferably 50 to 150 wt. percent. The water content of the molten KOH should be within the range of 5 to 30 wt. percent, preferably 7 to 25 wt. percent. The optimum water content would be about 15 wt. percent water. As is seen above, the temperature substantially affects the desulfurization obtained and the temperature during contacting should be in the range of about 300 to 900° F., preferably 550 to 750° F. Furthermore, the longer the treating time the more the desulfurization, but treating time less than 4 hours may be used. It is preferred, however, that treating times within the range of about ¼ to 6 hours be employed.

EXAMPLE 2

This experiment was conducted to demonstrate the removal of sulfur and metals which is obtained by use of the molten KOH containing water of the instant invention. The experiments were conducted in two physically different environments; namely, an autoclave and an open beaker. Three different feeds were tested. In two runs the autoclave was used to avoid loss of light hydrocarbons from the more volatile feeds. Contacting and oil recovery in both the autoclave and open beaker tests were accomplished by the same general procedure as described in Example 1.

The results of the experiments are given in Table II below with the temperature and contact time of each run. In each test the molten KOH contained 15 wt. percent water based on total reagent and the reagent was present in equal amounts by weight to the feed being treated. Only traces or gas or coke were formed during these tests.

agents as compared to that effected with the same quantity of single-component reagent. This was unexpected since $Ba(OH)_2$ by itself under these conditions is a relatively ineffective desulfurizing agent.

It is apparent that the presence of barium hydroxide with the aqueous molten KOH provides new and unexpected improved desulfurization of the oil. It is thus a

Table II

METAL AND SULFUR REMOVAL WITH MOLTEN KOH–H_2O REAGENT[1]

[15 wt. percent water based on total reagent]

Contacting Vessel	Nickel-Lined Autoclave				Open Beaker			
Feed	400° F.+ Heavy Lake Mix		700° F.+ Kuwait		950° F.+ Kuwait		650° F.+ Heavy Lake Mix	
Treating Temperatures, ° F.	650		700		600		600	
Contact Time, Hours	2.5		4.0		4.0		2	
	Feed	Product	Feed	Product	Feed	Product	Feed	Product
Inspections:								
Vanadium, p.p.m.	400	20	40	5	90	5	700	2
Percent Removed		95		88		95		100
Sulfur, Wt. Percent	2.5	2.0	4.2	2.9	5.2	2.8		
Percent Removed		20		31		46		
Nickel, p.p.m.							100	0.5
Percent Removed								100

[1] These data also illustrated the water retentive characteristics of KOH at atmospheric pressures and elevated temperatures as little or no water was lost from the molten reagent during treatment either from the autoclave or open beaker tests.

It may be seen from the above table that the molten KOH–H_2O reagent employed within the conditions of the instant invention is an excellent desulfurization and demetalization agent.

EXAMPLE 3

A 950° F.+ shale oil fraction was contacted for four hours at 600° F. with molten KOH containing 15% water, based on total reagent, in a manner similar to that used in Example 1. The nitrogen content of the shale oil was decreased from 2.7 wt. percent to 1.9 wt. percent, representing a nitrogen reduction of 30%.

EXAMPLE 4

A 950° F.+ Kuwait residuum was treated with molten KOH containing 15 wt. percent water with and without the presence of beta-naphthol. In the latter, the sulfur removal was 47% at 600° F. With the beta-naphthol present the sulfur removal was increased to 59% at the same temperature and other operating conditions. In each case, the molten KOH containing water amounted to 100 wt. percent of oil being treated. The quantity of beta-naphthol was 10 wt. percent based on oil. Contacting and work-up procedures were the same as in Example 1.

EXAMPLE 5

In treating a 950° F.+ Kuwait residuum at 600° F. for 4 hours, one part of oil and one part of molten KOH containing water give 47% desulfurization and with two parts of the same KOH reagent no better desulfurization was obtained. The percent of water in the molten KOH was 15 wt. percent based on total reagent. In a similar experiment carried out at the same temperature conditions and for the same length of time one part of oil, one part of KOH, and one part of barium hydroxide gave 64% desulfurization. Again, the water content was 15 wt. percent based on total reagent. The evaluations were carried out in the same way as described for Example 1 and demonstrate the more favorable extent of desulfurization which may be achieved with KOH–$Ba(OH)_2$ reagents as compared to that effected with the same quantity of single-component reagent. This was unexpected since $Ba(OH)_2$ by itself under these conditions is a relatively ineffective desulfurizing agent.

It is apparent that the presence of barium hydroxide with the aqueous molten KOH provides new and unexpected improved desulfurization of the oil. It is thus a preferred embodiment of the instant invention to employ the molten KOH containing water in combination with 5 to 50 wt. percent barium hydroxide based on total reagent to give further increased desulfurization.

EXAMPLE 6

A 950° F.+ Kuwait residuum containing 5.2 wt. percent sulfur was contacted at 500° F. for four hours with the theoretical quantity (44 wt. percent based on oil) of molten cesium hydroxide, containing 15 wt. percent water based on that reagent, required to react with the sulfur. The cesium hydroxide and oil were intimately mixed by high speed mechanical stirring during the test. After cooling to about 200 to 300° F., the oil was separated from the reagent and metal impurities with hot xylene. Solvent was then removed from the purified oil by distillation. The sulfur content of the recovered oil was reduced 52% and vanadium removal was 73 wt. percent.

It is clear from this example that molten CsOH containing 5 to 30 wt. percent water is an excellent sulfur and metal removing agent and is not equivalent to but rather unexpectedly superior to KOH. The effectiveness of this agent is more apparent when compared to the activity of molten KOH containing the same amount of water. In the same manner as discussed, this molten KOH(100 wt. percent based on oil) was contacted with said oil. At 600° F. the sulfur removal was 47% and at 550° F. it was 31%. As higher temperatures result in more sulfur removal, it is clear that at identical operating conditions the molten CsOH containing 5 to 30 wt. percent water would be substantially and unexpectedly superior to KOH as a desulfurizing agent. That is, with CsOH at 500° F. sulfur removal was 52% whereas with KOH at 550° F. sulfur removal was only 31%.

EXAMPLE 7

In the same manner as described in Example 1, 950° F.+ Kuwait residuum samples were treated with molten $Ba(OH)_2$, NaOH, and KOH alone or admixed with CsOH. In all runs the pressure was atmospheric and

the temperature about 600° F. The results are shown in Table III below.

Table II

DESULFURIZATION WITH CsOH PROMOTED REAGENTS

Test No	Reagent [1] (Nos. in ( ) are Metal Equivalents based on S)	Mol percent of Minor Component in Reagent	Percent Desulfurization	Percent Vanadium Removal
858	$Ba(OH)_2$ (1.7)		5	
873	$Ba(OH)_2$ (3.4)+CsOH (0.05)	1.5	13	
862	$Ba(OH)_2$ (3.4)+CsOH (0.1)	2.9	46	40
838	NaOH (8.0)		22	
872	NaOH (8.0)+CsOH (0.1)	1.2	34	
836	KOH (5.6)		47	
876	KOH (11.2)		46	
866	KOH (5.6)+CsOH (0.1)	1.8	57	

[1] In all tests the molten reagent contained approximately 15 wt. percent H_2O.

These tests clearly demonstrate the synergistic effect of the cesium hydroxide with barium hydroxide. The addition of 1/10 equivalent of CsOH, based on sulfur, promotes the removal of 5/10 equivalent of sulfur with an otherwise inactive reagent. The same proportion of CsOH when used with KOH increased desulfurization from 47 to 57%. At this level of desulfurization, this quantity of CsOH alone would be approximately ½ as effective. Increasing the amount of KOH by 100%, in the absence of CsOH, did not increase the extent of desulfurization.

EXAMPLE 8

To illustrate the effectiveness of regenerating the molten alkali metal sulfides with metal, metal oxides, and metal hydroxides, seventy parts by weight of potassium sulfide was mixed with 30 parts of water to form a liquid molten mixture which was segregated into various fractions for the following tests. In each of these tests, 200 cc. of the liquid molten mixture was slurried with 25–30 g. of the powdered metal oxide and maintained at a temperature between 250 and 300° F. for two hours. Slurrying was obtained by vigorous mechanical agitation with a high speed stirrer. A metal sulfide was formed and alkali metal hydroxide regenerated. The metal sulfide was separated by settling and filtration. The percentage conversion of the various regeneration agents to the corresponding sulfide is shown in Table IV.

Table IV

Regeneration Agent	Percent of Regeneration Agent Converted to the Sulfide
Fe_2O_3	60
$Fe(OH)_3$	91
CuO	91
CoO	32
MnO_2	16
$Ca(OH)_2$	0.2
$Ca(OH)_2$	[1] 50.0

[1] This run was made at 500° F. with 90% K_2S, 10% H_2O.

It will be seen from the table above that the metal oxides and hydroxides readily take the sulfur from the potassium sulfide and regenerate potassium hydroxide. Though calcium hydroxide at the low temperatures used in the above tests (i.e., 250–300° F.) did not assist greatly in the conversion to potassium hydroxide, at temperatures in the range of 400–600° F. with a more concentrated potassium sulfide solution, as shown in the second run with $Ca(OH)_2$, the calcium hydroxide was readily converted to calcium sulfide, thus illustrating the criticality of temperature and water concentration on the regeneration step.

EXAMPLE 9

In separate runs a 900° F.+ Kuwait residuum was contacted with (1) a mixture of copper powder and molten potassium hydroxide containing 15 wt. percent water based on total reagent, (2) molten potassium hydroxide containing 15 wt. percent water based on total reagent, and (3) powdered copper alone to demonstrate the effect of employing the molten alkali metal hydroxide and copper simultaneously. The oil during these runs was at a temperature of 600° F. Contacting was carried out at atmospheric pressure in a stainless steel reactor provided with high speed mechanical stirring.

The table below indicates the amount of sulfur and the form it was in when removed from the residuum oil.

Table V

Reagent	Wt. Percent Reagent(s) on Feed	S Removed from Residuum as—	Percent S Removed
85% KOH-15% H_2O/Cu	40/125	CuS	32
85% KOH-15% H_2O	40	K_2S	31
Cu	125	CuS	10

It will be seen from the above data that in the simultaneous desulfurization and conversion the sulfur was removed as copper sulfide and no detectable quantities of potassium sulfide remained in the reaction products. It will be noted that sulfur removal was not increased by the presence of the copper and thus the potassium hydroxide acts as the sulfur removing agent, the copper merely converting the potassium sulfide so formed back to potassium hydroxide and resultant copper sulfide.

EXAMPLE 10

Substantially the same procedure as described in Example 9 above was employed on a 950° F.+ Kuwait residuum at 600° F. to compare the removal of sulfur by molten KOH containing 15 wt. percent water based on total reagent in the absence or presence of a metal, metal oxide, or metal hydroxide. In all the runs the amount of KOH employed was 34 parts by weight per 100 parts of residuum. Where a metal or metal oxide was present, it was present to the extent of 125 parts by weight of residuum being treated.

Table VI

Metal or Metal Oxide Added	Percent Sulfur Removed from Residuum	Sulfur Removed as—
None	31	K_2S.
NiO	32	NiS.
CoO	31	CoS.
Cu	32	CuS.

The desulfurization was equivalent to that obtained with the potassium hydroxide alone; however, the sulfur was recovered in the form of a metal sulfide rather than the alkali metal sulfide and the amount of KOH was substantially the same as before contacting with the residuum.

Cesium hydroxide may be obtained from many sources. Probably the most economic source, however, is from Alkarb, a mixed cesium, rubidium, potassium carbonate

produced as a by-product in the separation of lithium hydroxide from lepidolite ore. Cesium carbonate may be easily separated from the Alkarb and converted to cesium hydroxide by steam hydrolysis or other suitable methods. Potassium hydroxide is available commercially in large quantities as is.

This invention is not to be limited by any theory regarding its operation; nor is it to be limited by the specific examples herein presented or the specific embodiments herein described. The scope of the invention is to be determined by the appended claims.

This application is a continuation-in-part of application Serial Number 45,309, filed on July 26, 1960, now Patent No. 3,128,155, application Serial Number 45,344, filed on July 26, 1960, now abandoned, and of application Serial Number 52,883, filed on August 30, 1960, now abandoned, all assigned to applicant's assignee.

What is claimed is:

1. The process of removing sulfur impurities from a liquid hydrocarbon stream which comprises contacting said liquid hydrocarbon stream in the liquid phase with molten potassium hydroxide containing 5 to 30 wt. percent water based on total reagent, said contacting being conducted at a temperature in the range of 300° F. to 900° F.

2. The process of claim 1 wherein said reagent contains about 7 to 25 wt. percent water and the contacting is conducted within a temperature range of about 550 to 750° F.

3. The process of removing sulfur impurities from a hydrocarbon stream boiling above about 950° F. which comprises contacting said stream in the liquid phase at a temperature in the range of about 550 to 730° F. with molten potassium hydroxide containing about 5 to 30 wt. percent water based on total reagent.

4. The process of removing sulfur, nitrogen, and metallic contaminants from a liquid hydrocarbon stream which comprises contacting said liquid hydrocarbon in the liquid phase with molten potassium hydroxide containing about 5 to 30 wt. percent water based on total reagent, said contacting being conducted at a temperature in the range of about 350 to 800° F.

5. A process for removing sulfur from a hydrocarbon stream which comprises contacting said hydrocarbon stream in the liquid phase at a temperature in the range of about 350 to 800° F. with a reagent containing molten potassium hydroxide and 5 to 50 wt. percent of a compound selected from the group consisting of barium hydroxide, barium hydroxide monohydrate, and mixtures thereof, and containing about 5 to 30 wt. percent water based on total reagent.

6. The process for removing sulfur, nitrogen, and metallic contaminants from a hydrocarbon stream which comprises contacting said hydrocarbon stream with molten cesium hydroxide reagent in the liquid phase, said reagent containing 5 to 30 wt. percent water and said contacting being carried out at temperatures between 350 and 800° F.

7. The process of claim 6 wherein said cesium hydroxide is used in admixture with a compound selected from the group consisting of potassium hydroxide, sodium hydroxide, barium hydroxide, and barium hydroxide monohydrate.

8. The process for removing sulfur impurities from a hydrocarbon stream which contains hydrocarbon constituents boiling above about 950° F. at a temperature in the range of 350 to 800° F. which comprises contacting said hydrocarbon stream with a reagent comprising molten cesium hydroxide and a compound selected from a group consisting of potassium hydroxide, sodium hydroxide, barium hydroxide, barium hydroxide monohydrate and mixtures thereof, wherein said reagent contains 1 to 20 mol percent of cesium hydroxide and contains from about 5 to 30% by weight of water based on total reagent.

9. The process of claim 8 wherein the reagent consists of molten potassium hydroxide and cesium hydroxide.

10. The process of claim 8 wherein said reagent consists of molten sodium hydroxide and cesium hydroxide.

11. The process of claim 8 wherein said reagent consists of molten barium hydroxide and cesium hydroxide.

12. The process for removing sulfur from a hydrocarbon stream which comprises contacting in a first treating zone, said hydrocarbon stream with a reagent containing molten alkaline metal hydroxide and 5 to 30 wt. percent water based on total reagent to form alkali metal sulfide, segregating said alkali metal sulfide from said hydrocarbon stream and contacting in a second treating zone said alkali metal sulfide in the presence of 5 to 30 wt. percent water at a temperature in the range of 200 to 1000° F. with a finely divided solid compound selected from the group consisting of Me, MeO, MeOH, and mixtures thereof, wherein Me is selected from the group consisting of copper, nickel, iron, manganese, cobalt, calcium, magnesium, molybdenum, lead, tin, zinc, tungsten, antimony, and bismuth to form alkaline metal hydroxide and recycling said alkaline metal hydroxide to said first treating zone.

13. A process for regenerating alkali metal sulfides to alkali metal hydroxides, which comprises contacting the alkali metal sulfide in the presence of 5 to 30 wt. percent water, based on hydroxide and water, at a temperature of 200 to 1000° F. with a finely divided solid compound selected from the group consisting of Me, MeO, MeOH, and mixtures thereof, wherein Me is selected from the group consisting of copper, nickel, iron, manganese, cobalt, calcium, magnesium, molybdenum, lead, tin, zinc, tungsten, antimony, and bismuth.

14. The process of claim 13 wherein the alkaline metal sulfide being regenerated is potassium sulfide.

15. The process of claim 13 wherein the metal oxide is iron oxide.

16. The process of claim 13 wherein the metal hydroxide is iron hydroxide.

17. The process of claim 13 wherein the metal oxide is copper oxide.

18. The process of claim 13 wherein the metal oxide is cobalt oxide.

19. A process for removing sulfur from hydrocarbon streams and simultaneously regenerating the desulfurizing agent, which comprises contacting said hydrocarbon stream in the presence of water and a finely divided solid compound with molten alkali metal hydroxide at a temperature in the range of 300 to 1000° F., said compound being selected from the group consisting of Me, MeO, MeOH, and mixtures thereof, wherein Me is selected from the group consisting of copper, nickel, iron, manganese, cobalt, calcium, magnesium, molybdenum, lead, tin, zinc, tungsten, antimony and bismuth, wherein said contacting is carried out in the presence of 5 to 30 wt. percent of water based on hydroxide and water.

20. The process of claim 19 wherein said metal compound is copper.

21. The process of claim 19 wherein said metal compound is iron oxide.

22. The process of claim 19 wherein said metal compound is nickel.

23. The process of claim 19 wherein said metal compound is iron hydroxide.

24. The process of claim 19 wherein said metal compound is copper oxide.

25. The process of claim 19 wherein said metal compound is nickel oxide.

26. The process of claim 19 wherein said metal compound is cobalt oxide.

27. The process of claim 19 wherein said alkali metal sulfide is contacted with finely divided calcium hydroxide at a temperature of 400 to 600° F., whereby the sulfide

is converted to the hydroxide and the calcium hydroxide is converted to calcium sulfide.

28. Process for upgrading heavy hydrocarbon oils containing contaminants selected from the group consisting of metals and ring compounds of sulfur and nitrogen which comprises the steps (1) intimately contacting the oil in the liquid phase with a reagent comprising potassium hydroxide and no more than about 30% by weight water, based on the reagent, the weight ratio of the reagent to hydrocarbon oil being from 25 to 200% at a temperature between about 550 and 750° F. for at least 0.1 to 16 hours, thus forming a reaction mixture of reagent and reacted oil product, (2) adding a solvent to the reaction mixture, (3) separating in a first separation zone the reaction mixture of reacted oil product and reagent into at least two phases, an upper liquid phase comprising liquid reaction product and a lower liquid phase comprising reacted reagent (4) withdrawing separately the upper liquid phase from the first separation zone, (5) mixing the withdrawn liquid phase of oil reaction product with water, (6) separating in a second separation zone the mixture of liquid oil reaction product and water into two liquid phases, an upper liquid phase substantially free of reagent and having substantially reduced content of contaminants, and a lower liquid phase of water containing reagent removed from the liquid oil reaction product.

29. A process for upgrading heavy hydrocarbon oils containing metals, sulfur and nitrogen contaminants which comprises intimately contacting the oil in the liquid phase with a reagent comprising potassium hydroxide and no more than about 30% by weight of water based on the weight of reagent, the weight ratio of reagent to oil being from 25% to 200% based on feed, at a temperature between about 350 to 800° F. for at least ¼ hour to about 6 hours, thus forming a reaction mixture of reagent and reacted oil product; separating the reaction mixture of reacted oil products and reagent into at least two phases, an upper liquid phase comprising liquid reaction product and a lower phase comprising reacted reagent and water, withdrawing separately the upper liquid phase, mixing the withdrawn liquid phase of oil reaction product with water, separating this mixture into two liquid phases, an upper liquid phase substantially free of reagent and having substantially reduced content of contaminants and a lower liquid phase of water containing reagent recovered from the liquid oil reaction product.

30. A process for removing sulfur from a sulfur-containing heavy residual fraction boiling above about 900° F. and simultaneously regenerating the desulfurizing agent which comprises contacting said heavy residual fraction in the presence of a finely-divided solid compound with molten alkali metal hydroxide desulfurizing agent containing 5 to 30 wt. percent water based on said hydroxide and water at a temperature in the range of about 300° to 1000° F., said solid compound being selected from the group consisting of Me, MeO, MeOH and mixtures thereof wherein Me is selected from the group consisting of copper, nickel, iron, manganese, cobalt, calcium, magnesium, molybdenum, lead, tin, zinc, tungsten, antimony and bismuth whereby said molten metal hydroxide is converted to alkali metal sulfide which is regenerated to form the alkali metal hydroxide.

References Cited in the file of this patent

UNITED STATES PATENTS

1,791,179	Wendt	Feb. 3, 1931
2,267,809	Borden	Dec. 30, 1941
2,435,732	Ayers	Feb. 10, 1948
2,447,051	Bond	Aug. 17, 1948
2,616,833	Chenicke et al.	Nov. 4, 1952
3,039,957	Robbins et al.	June 19, 1962