United States Patent [19]

Tobey et al.

[11] **3,737,605**

[45] **June 5, 1973**

[54] **SWITCH SEAL**

[75] Inventors: **Albert E. Tobey**, Fullerton; **Alvis W. Wood**, Mission Viejo, both of Calif.

[73] Assignee: **The United States of America as represented by the Secretary of the Navy**, Washington, D.C.

[22] Filed: **Apr. 8, 1971**

[21] Appl. No.: **132,469**

[52] **U.S. Cl.** .....**200/168 G**, 277/212 FB

[51] **Int. Cl.** **H01h 9/02**

[58] **Field of Search** .....277/95, 212 FB; 200/159 R, 168 G, 172 R

[56] **References Cited**

UNITED STATES PATENTS

3,222,467	12/1965	Meyer	200/16 D
1,779,018	10/1930	Smallwood et al.	277/212 C
2,305,265	12/1942	LeTourneau	277/212 FB
3,326,559	6/1967	Persons	277/95
3,588,423	6/1971	Hallerberg	200/168 G

FOREIGN PATENTS OR APPLICATIONS

1,525,506	1/1970	Germany	277/206
636,395	3/1962	Italy	277/212 FB

Primary Examiner—Meyer Perlin
Assistant Examiner—Ronald C. Capossela
Attorney—R. S. Sciascia and O. E. Hodges

[57] **ABSTRACT**

This invention is a switch seal for push button type electrical switches to prohibit water from leaking into entry panels and damaging electronic functions.

8 Claims, 3 Drawing Figures

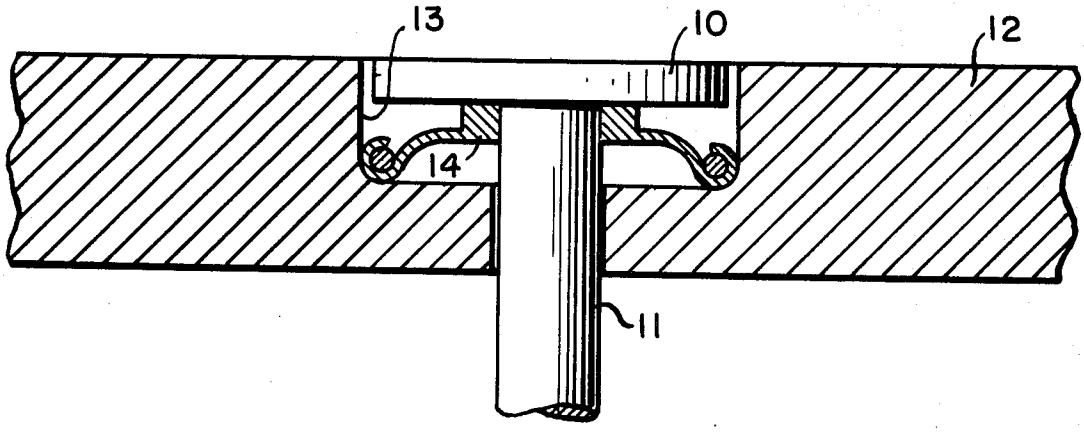

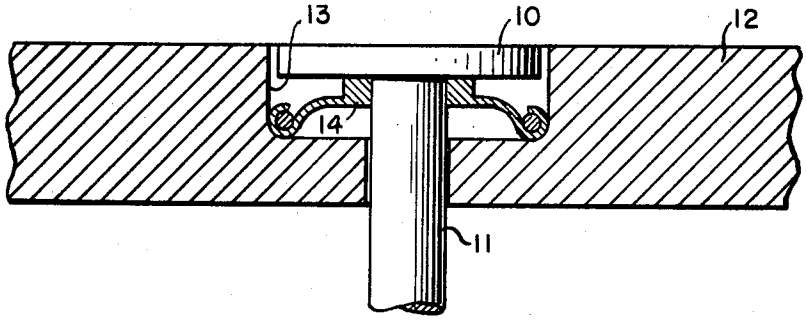

FIG. 1.

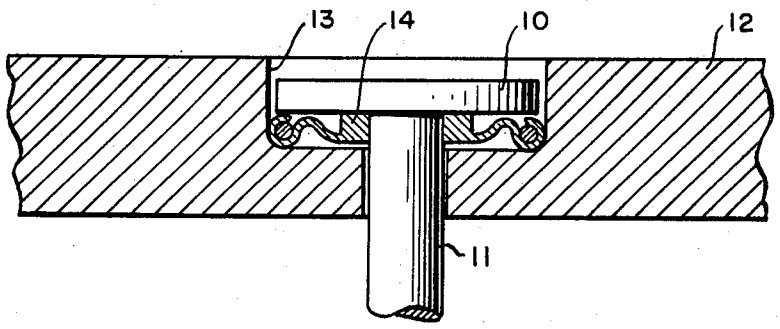

FIG. 2.

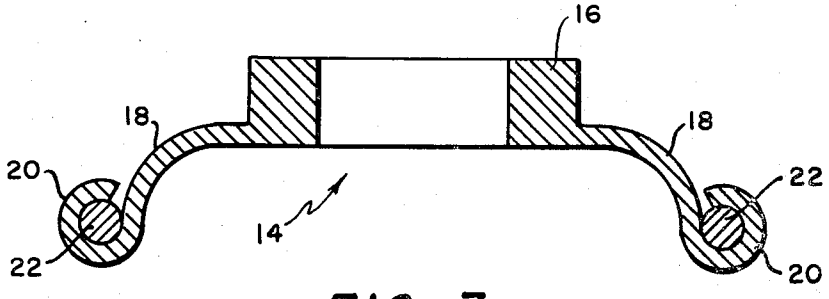

FIG. 3.

INVENTORS
ALBERT E. TOBEY
ALVIS W. WOOD
BY
ATTORNEY

SWITCH SEAL

BACKGROUND OF THE INVENTION

At present the leakage of water into action entry panels causing damage to vital electronic functions has been a problem. Presently available push button switch seals retain water in the upper panels. Presently available seals are complex and require clamping means such as bolted flanges.

The present invention has the advantages that it can fit into a very small area below the push button switch, that it assumes the shape of the depressed area of the switch panel and that it can be made to fit switch panel applications where extreme fit problems occur. The device provides a simple, inexpensive solution to the leakage problem mentioned above.

SUMMARY OF THE INVENTION

The general purpose of this invention is to provide a seal means which can prevent water from leaking into action entry panels and damaging electronic functions. To attain this desired result, the present invention provides a seal with a collar means which fits tightly around the shaft connected to a diaphram means having a reinforced edge which expands outwardly to seat in the depressed portion below the switch without requiring clamping.

OBJECTS OF THE INVENTION

The principal object of the invention is to provide a switching seal which will prohibit moisture from leaking into action entry panels.

It is a further object of the instant invention to provide a switch seal which has the ability to fit into very small areas below push button switches.

Still another object of the invention is to provide a switch seal which assumes the shape of the depressed area of the switch.

It is a further object of the invention to provide a switch seal which requires no initial preload to the switch action.

In addition, it is another object of the instant invention to provide a switch seal which can be made to fit switch panel applications where extreme fit problems occur.

BRIEF DESCRIPTION OF THE DRAWING

FIG. 1 in cross-section, shows an undepressed push button switch with the switch seal installed in position;

FIG. 2 in cross-section, shows the same push button switch in the depressed position; and

FIG. 3 shows a cross-section of the switch seal alone in the undepressed condition.

DESCRIPTION OF THE PREFERRED EMBODIMENT

With continued reference to the drawing, FIG. 1 shows an undepressed push button **10**, of a switch with a switch seal **14**, installed on switch shaft **11**. Shaft **11** extends through action entry panel **12**, said panel having a depressed area **13**, to accomodate push button **10** when depressed.

FIG. 2 shows push button **10**, in a depressed condition within the depressed area **13**. It is noted that switch seal generally noted at **14**, is collapsible and therefore maintains a water tight seal in the depressed area **13**, in both the undepressed and the depressed conditions.

FIG. 3 shows switch seal **14** in full section, the switch seal comprises a collar means **16**, which fits snuggly around shaft **11**, of the push button. Collar **16** connected to a bell shaped diaphram having an edge **20**. Edge **20** is reinforced by a spring steel wire **22**. It is noted that another reinforcing material could be utilized. In addition the edge could be made thick enough to have inherent strength to provide a seal. In the preferred embodiment the collar **16** is a silicone rubber collar which fits tightly around the shaft **11** of the push button switch. The diaphram does not resist the push button required force for closing the switch. The spring steel wire **22**, is collapsed by squeezing the spring to a smaller diameter than the recess **13** in which the push button rests. The seal **14**, is then fit into the recess **13** and released. The spring wire **22** forces itself against the sides of the recess **13**, thereby providing a water tight seal. Such seal will resist minor pressure differential fluctuations encountered in operation.

It is understood that the invention is not limited to the exact details of construction shown and described, for obvious modifications will occur to persons skilled in the art. It is therefore to be understood that within the scope of the appended claims the invention may be practiced otherwise than as specifically described.

What is claimed is:

1. A moisture tight push button seal assembly of the type in which the shaft of a switch is restricted to longitudinal movement and passes through a panel member and where the button of said switch fits into a complementary depressed portion of said panel, comprising:

a panel member;

a depressed portion of said panel;

a shaft passing through said panel member and means to allow the shaft to move only in the longitudinal direction;

a radially inmost collar tightly surrounding said shaft and fixed to move longitudinally with said shaft;

a radially outward panel engaging means biased to circumferentially engage said depressed portion of said panel and being retained in engagement solely by friction;

a means inter-connecting said panel engaging means and said collar which, upon inward longitudinal movement of said shaft, said inter-connecting means collapses and simultaneously biases the entire circumference of said collar means circumferentially inward and said panel engaging means circumferentially outward to enhance the seal around the entire circumference of said collar and the entire circumference of said panel engaging means.

2. A switch seal as in claim **1**, wherein said collar means, said panel engaging means and said diaphram are made of silicone rubber.

3. A switch seal as in claim **2** wherein said panel engaging means is reinforced with spring steel wire.

4. A switch seal as in claim **3**, wherein said interconnecting means is bell shaped.

5. A switch seal as in claim **3**, wherein said spring steel wire is circumferentially compressible.

6. A switch seal as in claim **3**, wherein said spring steel wire further reinforces and biases the panel engaging means circumferentially into engagement with the depressed portion of the panel.

7. A switch seal as in claim **1**, wherein said shaft includes a flange means which further fixes the collar means with respect to said shaft.

8. A switch seal as in claim **7**, wherein said flange means is a push button at the end of said shaft.

* * * * *