PATENT SPECIFICATION (11) 1 604 014

1 604 014

(21) Application No. 1793/77 (22) Filed 18 April 1977
(21) Application No. 16080/77 (22) Filed 18 April 1977
(23) Complete Specification filed 17 April 1978
(44) Complete Specification published 2 Dec. 1981
(51) INT CL³ F16B 2/14
(52) Index at acceptance
F2K 5 6A



(54) ATTITUDE SETTING DEVICES

(71) I, CARL DOUGLAS, a British subject of Kanalia, Wildwood Close, Pyrford, Woking, Surrey, do hereby declare

the invention for which I pray that a patent may be granted to me, and the method by which it is to be performed, to be particularly described in and by the following statement:—

This invention relates to setting devices for setting the attitude, i.e. the inclination and/or orientation, of a mounted member adjustably mounted on a base member.

Many ways of varying the inclination and orientation of an adjustably mounted member are known; for example, the member may be fixed relatively to one member of a ball-and-socket and thus be variable inclinable and orientable relatively to the other member of the ball-and-socket. Alternatively a device of the gimbal type may be employed. Such known arrangements however suffer from various disadvantages amongst which may be mentioned the difficulty of locking the adjustable member in a predetermined inclination and orientation and the difficulty of accurately inclining or orientating the member in a desired predetermined position when employing a principle based on independent adjustment about mutually-perpendicular axes.

According to the present invention there is provided a setting device for setting the attitude of a mounted member adjustably mounted on a base member, the device comprising a first and a second setting element through each of which the mounted member passes, the first element being arranged for rotation with respect to the base member and the second element being arranged for rotation with respect to the first element about an axis mutually inclined to that of the first element, and each element either being of wedge section such that they are maintained in their relative dispositions by the engagement of a planar surface of the first element with a planar surface of the second element, each surface being oblique to the axis of the respective element, or being a bush or like member through which the mounted member passes eccentrically, the arrangement being such that relative rotation of the elements continuously varies the inclination of the mounted member. A setting device according to the present invention is usually incorporated into an adjustable mounting.

Preferably the pair of setting elements are a pair of co-operating wedges capable of combined rotation about one axis and of independent relative rotation about another axis passing therethrough and inclined to said one axis. The wedge angles of the wedges may be the same or different: assuming that each wedge angle is $\alpha/2°$, then the inclination of an axis defined by the mounted member can be varied from 0° to $\pm\alpha°$ by a combination of rotation and relative rotation of the pair of wedges.

If said elements are constituted by a bush or like member, further mounting means for the mounted member are preferably provided at the point of intersection of the axis of the mounted member in a reference position and in a position inclined thereto. Preferably the second bush is eccentrically mounted in the first but it may be rotatably mounted on further mounting means; and the second bush may be solid with the mounted member, provided that the latter is rotatable.

The device of this invention may be readily calibrated both to pre-determine the positions of the setting elements relative to each other and to pre-determine the position of the pair of setting elements relatively to an external reference point such as, for example, a base plate.

Locking means are preferably provided to lock the pair of setting elements both relatively to each and relatively to an external reference point. Although any suitable locking means may be employed such as, for example, one or more locking pins passing through aligned apertures in the setting elements, it is preferred where possible that the setting elements be so mounted that they can be clamped together

and to an external member such as a base plate. In particular, it is preferred that a form of ball-and-socket locking construction be employed in which a ball member attached to one of the setting elements can be lockingly urged into a socket member in the other setting element and/or in an external member such as a base plate.

The device of this invention may be made of any suitable material such as, for example, stainless steel, mild steel, brass, aluminium alloy, reinforced plastics materials, titanium alloy or carbon fibre composite.

Clearly, the applications of the setting device of this invention are manifold since it may be employed in any situation where the orientation and/or inclination of an axis of a mounted member is required to be varied. In particular the device may comprise or form part of the axle of a wheel, e.g. a steering or suspension axle of a motor vehicle; the axle of a rotor, e.g. of a helicopter or of a marine propeller; a mounting for an instrument,e.g. a telescope, theodolite or the like; a mounting for setting a drilling, milling or grinding axis of a machine tool, e.g. a tool holder for a machine tool; or a thole pin or rowlock for a rowing boat. It will be understood that these applications are given by way of example only and it will be further understood that the invention embraces any apparatus, vehicle or machine incorporating a device in accordance with the present invention.

Embodiments of the device of this invention as incorporated into adjustable mountings will now be described, by way of example only, with reference to the accompanying drawings in which:—

Fig. 1 is a side elevation, partly in section, of an adjustable mounting according to the invention;

Fig. 2 is an end elevation, also partly in section, of the mounting of Fig. 1;

Fig. 3 is a plan of the mounting of Figs. 1 and 2;

Fig. 4 is an exploded perspective view of a mounting according to the invention for altering the inclination of a thole pin;

Fig. 5 is an elevation of the thole pin partly shown in Fig. 4.

Fig. 6 is a section on the line VI—VI of Fig. 5;

Fig. 7 is a section on the line VII—VII of Fig. 5;

Fig. 8 is a plan of a tapered washer shown in Fig. 4;

Fig. 9 is an elevation of the washer of Fig. 8;

Fig. 10 is a plan of a plate shown in Fig. 5;

Fig. 11 is an elevation of the plate of Fig. 10; and

Fig. 12 is a view, similar to that of Fig. 1, showing a further embodiment of an adjustable mounting according to the invention.

In the ensuing description, the same reference numbers are employed to denote the same or similar parts.

The adjustable mounting shown in Figs. 1 to 3 is a device for setting and locking a pin 10 in a desired attitude in relation to a base plate 11 and comprises a pair of two co-operating independently rotatable wedges or tapered washers 12, 13, each having a triangular extension and each being provided with an aperture through which freely passes the pin 10 which is provided with a flange 14 bearing against the upper surface of the wedge 13. The lower end of the pin 10 is threaded as at 15 and passes through an aperture in the base plate 11, the underside of which is countersunk to accommodate a domed locking nut 16 received on the threaded portion 15 of the pin 10.

As may be seen from Fig. 3 the upper surfaces of the triangular extensions of the wedges 12, 13 are provided with arcuate markings 17 for calibrating the inclination of the axis of the pin 10 and the visible upper surface of the base plate 11 is provided with radial markings 18 for calibrating the orientation of the pin axis.

The principle underlying this embodiment will readily be appreciated from Figs. 1 to 3. With the nut 16 slackened off the wedges 12, 13 are free to rotate. As the upper wedge 13 having a wedge angle of $\alpha/2^{\circ}$ between its upper and lower surfaces is rotated relative to the lower wedge 12 (wedge angle also $\alpha/2°$), the combined wedge angle will vary from 0° to $\alpha°$ and cause the angle of the flange 14 to alter correspondingly, hence the inclination of the axis of the pin 10 to the vertical will vary from 0° to $\alpha°$. The angle of inclination is set by reading off the marking 17 on the wedge 12 against those on the wedge 13.

The orientation of the pin axis is determined by the direction of a line passing through the axis and the point of intersection or overlap of the two wedges 12, 13 (Fig. 3). By rotation of the pair of wedges 12, 13 relatively to the base plate 11 the orientation of the pin axis may be varied, the degree of orientation being read off by the position of the point of intersection against the markings 18. By virtue of the variable orientation the total possible variation in the inclination of the pin axis is $\pm\alpha°$ to the vertical.

After the pin 10 has been set at the desired attitude the nut 16 is tightened to clamp the wedges 12, 13 and the base plate 11 axially against the flange 14.

The upper wedge 13 may be integral with

the pin 10 in which case it is necessary that the pin 10 be rotatable about its axis.

The wedges 12, 13 may be located on the underside of the base plate 11 in which case alternative locking means may be required. For example the flange 14 of the pin 10 may be provided with a convex lower surface to co-operate with a countersunk upper surface of the base plate 11.

This embodiment of Figs 1 to 3 is particularly suitable for incorporation in a rowlock of a racing rowing boat in which case the pin 10 constitutes a thole pin for supporting the oar. For such an application the variation in inclination required is typically 0° to 15° together with an ability to vary the orientation in any direction.

Figs. 4 to 11 show an adjustable mounting for altering the pitch of a thole pin 20 in a fixed pitching direction.

As shown in Figs. 4 and 5 the thole pin 20 is provided at its lower end with a flange 21 beyond which projects a square shank 22, terminating in a threaded portion 23, the shank 22 being freely received in a corresponding aperture in a supporting plate 24 secured to the hull of a racing rowing boat in a conventional manner. A washer 25 and locking nut 26 having co-operating spherical surfaces are received on the threaded portion 23. The upper end portion of the pin 20 is threaded in the normal way.

Positioned between the plate 24 and the flange 21 are a pair of pitch washers 27 and 28 and an interposed slide plate 29.

The pitch washer 27 (See Figs. 8 and 9) has an upper surface, which is inclined to its lower surface, and a circular central aperture 30 formed with a lobe 31. A scale plate 32 extends from one side of the washer 27 and is calibrated at 6° intervals with engraved radial lines 33. The outer arcuate edge 34 is scalloped and terminates at one end in a radial projection 35. The washer 28 is of similar form but in reversed position with the scale plate 32 consequently engraved on the other side from that of the washer 27.

The slide plate 29 (See Figs. 10 and 11) has an oblongate central aperture 36 the shorter dimension of which is such that it is a close fit on the corresponding flats of the shank 22. Flanking the aperture 36 are a pin 37 extending upwardly into the lobe 31 of the washer 27 and a pin 38 extending downwardly into the lobe 31 of the washer 28. At the apex of its pointed end the plate 29 has a pointer 39 having an inwardly facing pip 40.

To adjust the pitch of the thole pin 20 the nut 26 is slackened off and one of the pitch washers 27 and 28 rotated. The projections 35, besides providing suitable finger holds, also act to limit the rotation of the washers by abutment with the pointer 39. This movement of, say, the washer 27, causes sliding movement of the slide plate 29 by the camming action of the pin 37 in the lobe 31 and consequent counter-rotation, by a similar action, through an equal angle of the washer 28. The degree of relative rotation between the washers 27 and 28 will alter the inclination of the lower surface of the washer 28 to the upper surface of the washer 27 in the manner described in relation to Figs. 1 to 3 and hence the attitude imparted to the flange 21, and consequently the pin 20, with respect to the supporting plate 24. The angle of pitch thus imparted to the pin 20 can be read directly from the position of the pointer 39 against the scale 33 on the upper washer 27 and the engagement of the pip 40 in one of the indentations on each of the scalloped edges 34 prevents inadvertent alteration of the setting before the nut 26 can be tightened to lock the pin 20 in the desired inclination.

The mounting described above enables the pitch of the thole pin 20 to be varied only in a fixed pitching direction.

To enable the thole pin 20 to be adjusted to any desired attitude, that is to obtain variation in both the inclination and orientation of the pin 20, a further pair of washers 27 and 28 and an interposed slide plate 29 may be employed, acting in a direction at right angles to the direction of the described embodiment.

By use of the two sets of tapered washers the attitude of the pin may be set by Cartesian co-ordinates which may make for simpler setting and therefore readier consumer acceptance that is possible than with setting based on polar co-ordinates as employed in the embodiment of Figs. 1 to 3.

Other means of engaging the plate 29 with the washers 27 and 28 may be employed, for example cooperating teeth.

In the embodiment of Fig. 12 a pin 60 is formed with a terminal ball 61 received in a socket formed in a base plate 62 and having a bearing layer 63. The pin 60 passes through an inner eccentric bush 64 which is rotatable within an outer eccentric bush 65 which is itself rotatably mounted in an upper mounting plate 66. The outer bush is rotatable about an axis V and the inner about an axis U, the axis U and V being mutually inclined and intersecting at the centre of the ball 61. The geometry of the internal frusto-conical face 67 of the outer bush 65, of its external frusto-conical face 68, and of the respective co-operating faces of the inner bush 64 and of the mounting plate 66 is such that, by rotation of the inner bush 64 relative to the outer bush 65, there may be achieved a desired inclination of the pin 60 to the axis V, for example with the axis of the pin 60 extending along the line I

as shown in Fig. 12 and that by rotation of the outer bush 65 relative to the mounting plate 66 a desired orientation of the pin 60 may be achieved.

Locking means (not shown) are provided to enable the positions of the bushes 64 and 65 to be fixed relative to the upper plate 66 once the desired attitude of the pin 60 has been achieved.

The calibration of a device according to this invention may be such that the angle of inclination and direction of orientation of the mounted member may be set by direct observation of a pointer against calibration marks, e.g. by means of marks calibrated in degrees of inclination, or alternatively the attitude of the mounted member read off directly. Except in special cases, such as the embodiment of Figs. 4 to 11, the attitude of the mounted member is defined in terms of polar, and not Cartesian, co-ordinated, which is often a more useful form of indication.

The present invention is thus capable of providing a cheap, highly compact and reliable device by means of which an axis can be inclined at any angle between 0° and 90° and orientation of an axis can be simply and accurately adjusted to a pre-determined position, even under load, and then rigidly fixed in that position for as long as required.

One of the previously-mentioned applications of the setting device of the invention, besides that to thole pins, which is of particular importance is that to the steering systems of land vehicles. The geometry of conventional steering systems inevitably represents a compromise. However, a system employing devices according to the invention in conjunction with sensors and a servo system can be mechanically or electrically programmed to give the best steering geometry at all times, even for multi-wheel steering.

WHAT I CLAIM IS:—

1. A setting device for setting the attitude of a mounted member adjustably mounted on a base member, the device comprising a first and a second setting element through each of which the mounted member passes, the first element being arranged for rotation with respect to the base member and the second element being arranged for rotation with respect to the first element about an axis mutually inclined to that of the first element, and each element either being of wedge section such that they are maintained in their relative dispositions by the engagement of a planar surface of the first element with a planar surface of the second element, each surface being oblique to the axis of the respective element, or being a bush or like member through which the mounted member passes eccentrically, the arrangement being such that relative rotation of the elements continuously varies the inclination of the mounted member.

2. A device as claimed in Claim 1, in which the first and second elements are each a tapered washer and the mounted member is arranged to project therethrough and through an orifice in the base member.

3. A device as claimed in Claim 2, in which the mounted member has a flange for engagement with the free surface of the washer constituting the second element.

4. A device as claimed in Claim 1 in which each setting element is a bush and additionally comprising further mounting means at the point of intersection of the respective axes of the first and second bushes.

5. A device as claimed in Claim 4, in which the second bush is mounted eccentrically within the first bush.

6. A device as claimed in Claim 5, in which the first and second bushes are maintained in their relative dispositions by the engagement of an external frusto-conical surface on the second bush with an internal frusto-conical surface on the first bush.

7. A device as claimed in Claim 5 or 6, in which the first bush is mounted for rotation in the base member and has an external frusto-conical surface which engages a corresponding internal frusto conical surface of the base member.

8. A device as claimed in any preceding Claim, in which the first element and the second element are arranged for symmetrical contra-rotation only relatively to the base member and thereby alter the inclination of the mounted member with respect thereto.

9. A device as claimed in Claim 8 and additionally comprising a further pair of first and second elements as defined in Claim 8 and arranged to alter the inclination of the mounted member in a direction perpendicular to the direction of inclination imparted by the first-mentioned pair of elements.

10. A device as claimed in Claim 8 or 9 as appendant to Claim 2 or Claim 3, in which the first and second elements are each a tapered washer and additionally comprising a slidably mounted plate interposed between the tapered washers and arranged for displacement by camming action on rotation of one washer and for that displacement to cause equal rotation in an opposite sense of the other washer.

11. A device as claimed in any preceding Claim and further comprising locking means for securing the mounted member in a desired attitude relatively to the base member.

12. A device as claimed in any preceding

Claim, in which the elements are so arranged that rotation of the elements without relative rotation varies the orientation of the mounted member.

13. A device as claimed in any preceding Claim, in which the mounted member is a thole pin.

14. A device as claimed in Claim 1 and substantially as herein described.

15. A setting device substantially as herein described with reference to Figs. 1 to 3, Figs. 4 to 11 or Fig. 12 of the accompanying drawings.

GEE & CO.,
Chartered Patent Agents,
Chancery House,
Chancery Lane,
London, WC2A 1QU,
and
39, Epsom Road,
Guildford,
Surrey,
Agents for the Applicant.

Printed for Her Majesty's Stationery Office, by the Courier Press, Leamington Spa, 1981
Published by The Patent Office, 25 Southampton Buildings, London, WC2A 1AY, from which copies may be obtained.

1604014 COMPLETE SPECIFICATION

4 SHEETS *This drawing is a reproduction of the Original on a reduced scale*

Sheet 1

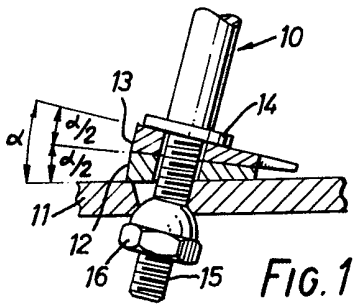

FIG. 1

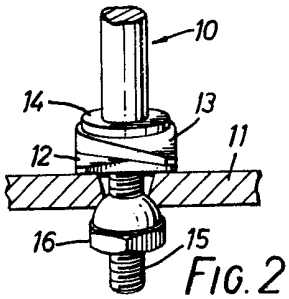

FIG. 2

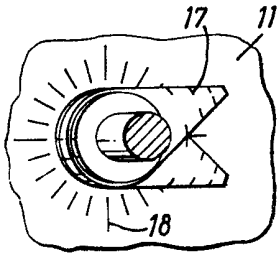

FIG. 3

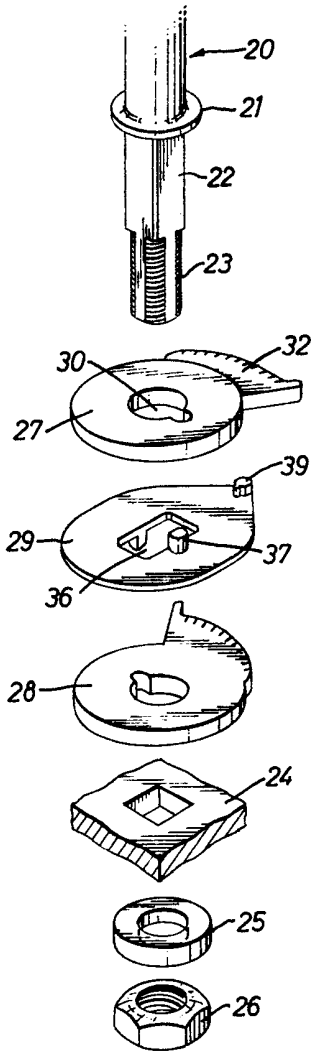

FIG. 4

1604014 COMPLETE SPECIFICATION
4 SHEETS This drawing is a reproduction of the Original on a reduced scale
Sheet 3

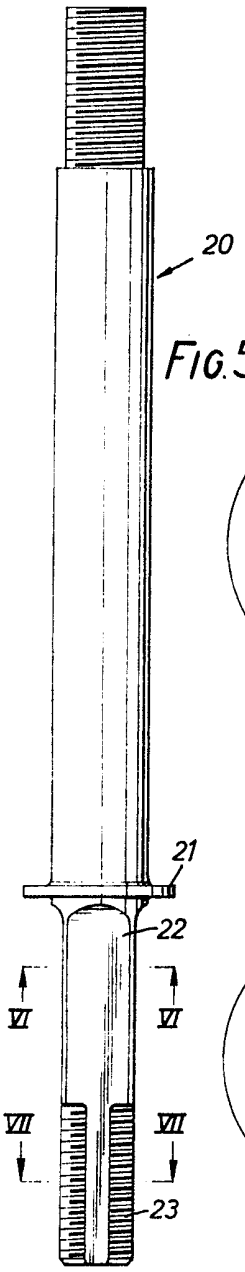

FIG.5

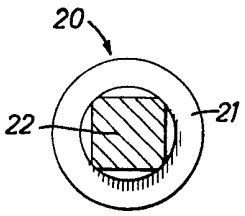

FIG.6

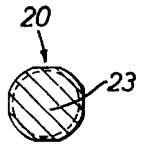

FIG.7

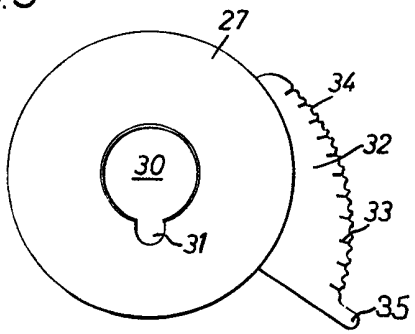

FIG.8

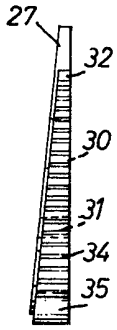

FIG.9

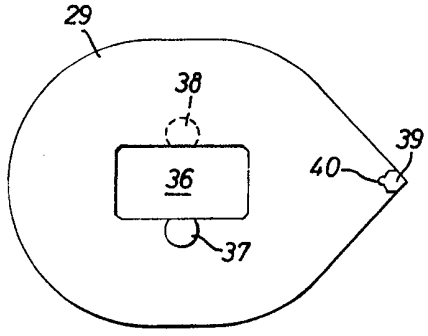

FIG.10

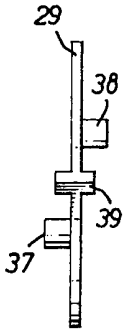

FIG.11

1604014 COMPLETE SPECIFICATION
4 SHEETS *This drawing is a reproduction of the Original on a reduced scale*
Sheet 4

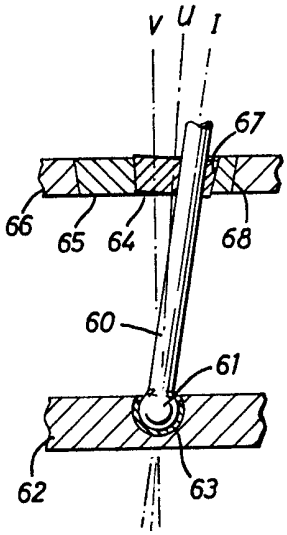

FIG. 12