Jan. 4, 1927. 1,613,255

R. S. TYLER

INK FOUNTAIN FOR PRINTING PRESSES

Filed May 17, 1924

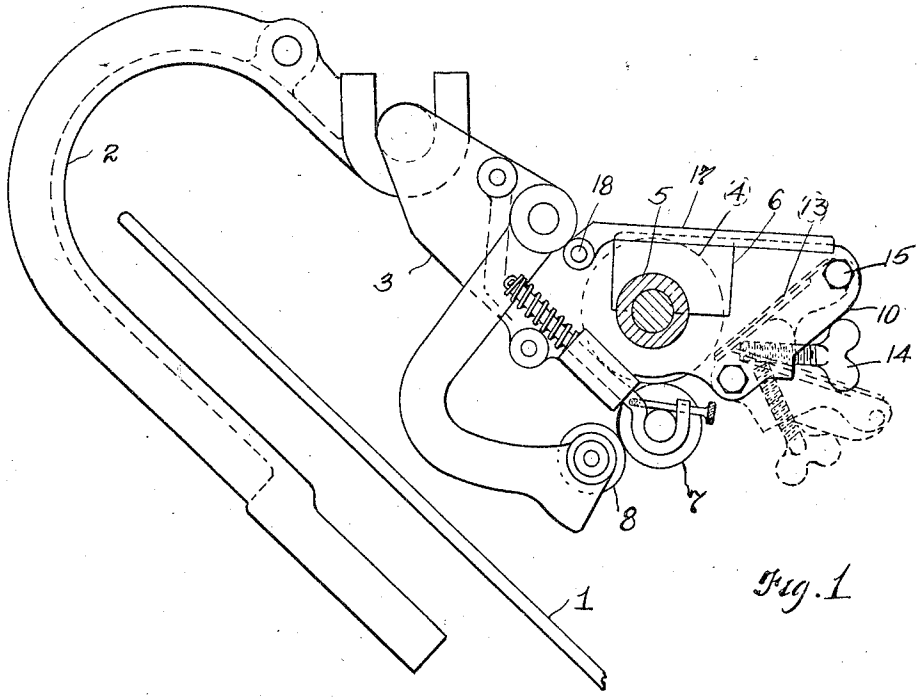

Fig. 1

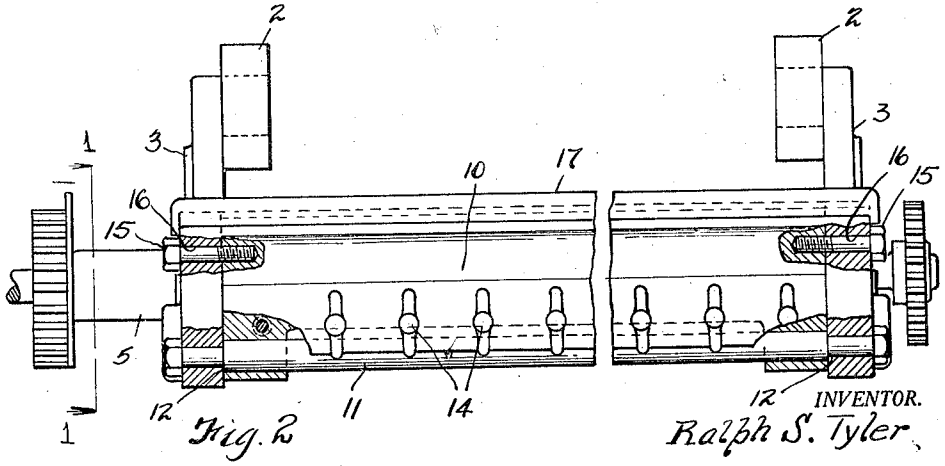

Fig. 2

INVENTOR.
Ralph S. Tyler

BY
Fay, Oberlin & Fay
ATTORNEYS

Patented Jan. 4, 1927. 1,613,255

UNITED STATES PATENT OFFICE.

RALPH S. TYLER, OF CLEVELAND HEIGHTS, OHIO, ASSIGNOR TO THE CHANDLER & PRICE COMPANY, OF CLEVELAND, OHIO, A CORPORATION OF OHIO.

INK FOUNTAIN FOR PRINTING PRESSES.

Application filed May 17, 1924. Serial No. 713,890.

In printing presses of the so-called platen or Gordon type, it is usual to support an ink fountain adjacent the upper edge of the rotary disk over which the inking rolls pass on their way to and from the form, such fountain being disposed to supply to a brayer roll, that operates in conjunction with the form rolls, a predetermined quantity of ink each time the brayer roll is brought adjacent the fountain. The fountain in question consists of a trough-like box in which a quantity of ink may be placed, one side wall consisting of a roller by the rotation of which the ink is withdrawn for delivery in the fashion just described.

The object of the present invention is to provide a fountain of the foregoing type wherein access may be readily had to such last mentioned roll for the purpose of cleaning the same as well as for cleaning the interior of the fountain in its entirety. A further object is to provide a simple and compact arrangement of parts, such parts being capable of being readily assembled and disassembled.

To the accomplishment of the foregoing and related ends, the invention, then, consists of the means hereinafter fully described and particularly pointed out in the claim, the annexed drawing and the following description setting forth in detail certain mechanism embodying the invention, such disclosed means constituting, however, but one of various mechanical forms in which the principle of the invention may be used.

In said annexed drawing:—

Fig. 1 is a side elevation of my improved ink fountain shown mounted in operative relation to the inking disk of a platen printing press; and Fig. 2 is a front elevation of such fountain, portions being sectioned to show details of its construction.

The disk or plate 1, as shown in Fig. 1, is a conventional representation of any suitable plate or disk over which the form rollers (not shown) may be operated backwardly and forwardly in the ordinary manner. Suitably connected to the press frame (likewise not shown) are two recurved arms or brackets 2 from which the fountain mechanism of present interest is supported, such fountain including, among other parts, two end frame members 3, 3, that detachably engage with the upper ends of the supporting arms 2, as best shown in Fig. 1.

The lower portions of said end frame members 3 are of plate like form and extending transversely therebetween is the fountain roller 4, the ends of the roller spindle 5 being journaled in said frame members. Removable sections 6 in the latter serve normally to retain in place the bearings for such spindle ends, but upon removing the sections in question, the roller may be removed, as will be readily understood. Suitable means, such for example as shown in my Patent No. 1,352,159, dated September 7, 1920, will be provided for intermittently rotating said roller 4 in a clockwise direction, as viewed in Fig. 1, but since such means form no part of the present invention, it is considered unnecessary that they be illustrated or described in this connection. A composition roller 7 is held in peripheral contact with said fountain roller 4 and in turn contacts with a metallic roller 8, preferably of smaller diameter, it being with the latter that the upper of the form rollers comes in contact as such form rollers are moved back and forth across disk 1.

The front wall 10 of the fountain consists of a rectangular casting that fits between end frame members 3, being pivotally attached to the latter by means of a rod 11, fixedly secured at its respective ends in said end frame members and serving to hold the latter in properly spaced relation by reason of shoulders 12 on such rod ends. Attached to the upper edge of the front wall is a sheet metal plate 13 that forms in effect the inner face of the wall, the lower edge of such plate lying contiguous to the periphery of the fountain roller 4, as shown in Fig. 1. This plate is sufficiently flexible so that its lower edge may be moved inwardly into more or less close contact with the roll by means of a series of thumb screws 14 threaded in the front wall and projecting therethrough into contact with the lower edge of the plate.

Normally the front wall with the plate 13 thus adjustably attached thereto is held in its upper position by means of two screws 15, one at each end, such screws passing through corresponding openings 16 in the adjacent forward and upper corners of the end frame

members 3 of the fountain. A cover plate 17 is hingedly attached to such end walls about an axis 18, located to the rear of the fountain roller, and serves when in its down position to completely close the fountain. It may, however, be readily tilted upwardly when, for example, it is desired to supply a fresh quantity of ink.

By reason of the pivotal connection of the front wall 10 with the end walls 3 of the fountain, as provided by the rod 11 about which such front wall hinges, it will be seen that upon removing the screws 15, such wall may be swung downwardly and outwardly until it occupies, for example, the position shown in dotted outline in Fig. 1. In this position, assuming the cover plate 17 also to be swung backwardly, both the spring plate 13, carried by such front wall, and the fountain roller 4 are fully exposed and accessible for cleaning or other purpose. The relation of the pivotal axis, about which the front wall thus hinges to the lower edge of plate 13, is such that this edge is carried away from the roller incidentally to such swinging or dropping movement of the front wall.

Other modes of applying the principle of my invention may be employed instead of the one explained, change being made as regards the mechanism herein disclosed, provided the means stated by the following claim or the equivalent of such stated means be employed.

I therefore particularly point out and distinctly claim as my invention:—

In mechanism of the character described, the combination of two end frame members, a roller journaled at its respective ends in said members, an elongated wall fitting between said members and forming along with said roller a trough-like receptacle, a rod passing through said members and the lower portion of said wall, said rod forming a pivotal axis about which said wall may be swung away from said roller when desired, a resilient plate attached to said wall adjacent its upper edge, a series of screws passing through said wall and contacting with the lower edge of said plate, and screws in said end members respectively adapted to engage with said wall adjacent its upper edge and secure the same against movement about its pivotal axis.

Signed by me this 14 day of May, 1924.

RALPH S. TYLER.