Jan. 2, 1951 N. TESTI 2,536,109

BLADE MAGAZINE

Filed May 17, 1945

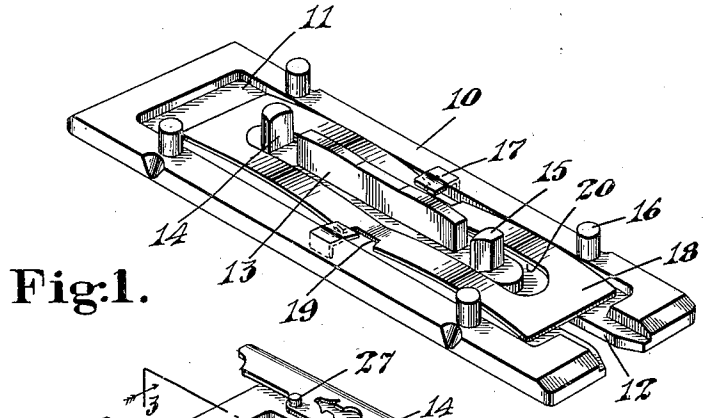

Fig.1.

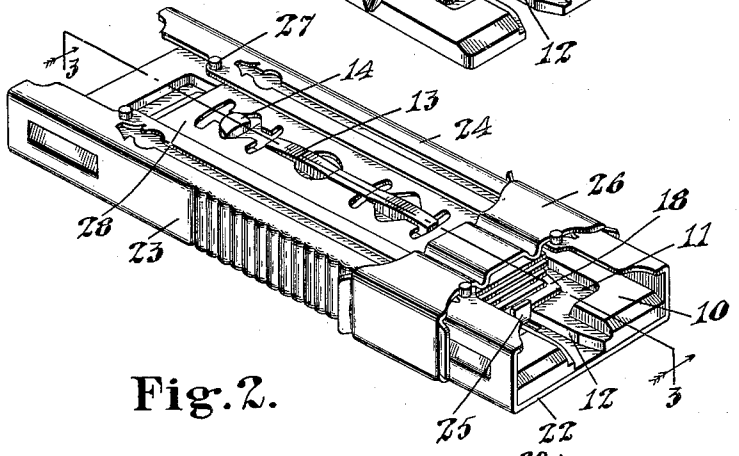

Fig.2.

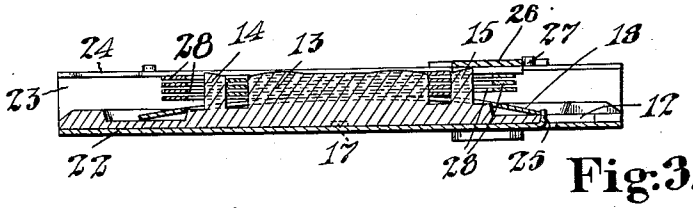

Fig.3.

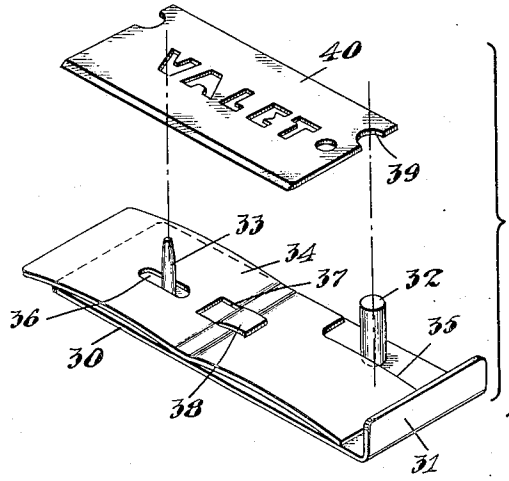

Fig.4.

INVENTOR
Nicholas Testi.
BY
Thos. Conway Atty.

Patented Jan. 2, 1951 2,536,109

UNITED STATES PATENT OFFICE

2,536,109

BLADE MAGAZINE

Nicholas Testi, Boston, Mass., assignor to Gillette Safety Razor Company, Boston, Mass., a corporation of Delaware

Application May 17, 1945, Serial No. 594,275

10 Claims. (Cl. 206—16)

1

This invention consists in an improved magazine for sharp-edged blades, such as safety razor blades. Its characteristic feature is self-contained provision for temporarily locking the spring of the magazine in flattened or compressed condition during the operation of filling or loading the magazine.

It will be understood that an essential element of most blade magazines is a spring that acts upon the stack of blades in the magazine to hold them in position or to position one blade of the stack for ejectment. For example, the stack of blades may rest upon a bowed spring which maintains the uppermost blade of the stack at all times in contact with the top of the magazine and in alignment with the path of the feed slide. Accordingly it becomes necessary for the manufacturer, in loading the magazine, to hold the spring in compressed position for a substantial interval while the blades are being presented and until the magazine is completely assembled; otherwise the spring prevents the blade stack from occupying its normal position in the base of the magazine and tends to disturb the stacked relation of the blades.

I have discovered that the difficulty above described may be obviated and certain advantages achieved by providing the base of the magazine itself with means which may be operated to latch or hold the spring temporarily in inoperative position and may be subsequently released in the completely assembled and loaded magazine so that the blade stack will not be in the meantime in any way disturbed. The mechanical construction of the locking means is of secondary importance so long as it accomplishes the function outlined. As herein shown, however, the base of the magazine and the spring are provided with interlocking elements, such as a tongue and a slot, which may be engaged preliminary to the magazine-loading operation and then readily disengaged by relative movement of the parts after the loaded magazine has been assembled.

These and other features of the invention will be best understood and appreciated from the following description of a preferred embodiment thereof selected for purposes of illustration and shown in the accompanying drawings in which:

Fig. 1 is a view in perspective of the base of the magazine showing a spring interlocked therewith in flattened position, all on an enlarged scale;

2

Fig. 2 is a view in perspective of the loaded blade magazine;

Fig. 3 is a view of the magazine in longitudinal section on the line 3—3, Fig. 2; and

Fig. 4 is a view in perspective suggesting the application of the invention to a magazine for single-edged types of blade.

For purposes of illustration, the present invention is shown as embodied in a magazine of the general type disclosed in my Patent No. 2,330,252, dated September 28, 1943, and which is particularly intended for apertured or slotted double-edged safety razor blades of a well-known commercial type. It will be understood, however, that the invention is not limited to that or to any specific type of blade but with appropriate modification may be embodied in magazines for widely different types of blades.

The illustrated magazine comprises two principal parts: a base upon which the stack of blades is positioned and an elongated tubular casing arranged to enclose the loaded base and to carry the feed slide. The base 10 as shown in Fig. 1 is rectangular in outline and provided in its upper face with a rectangular well or recess 11. The ends of the base are beveled and one end is forked, being provided with a longitudinal passage 12 having diverging walls which open through the right-hand end of the base as shown in Fig. 1. Symmetrically arranged in the base and projecting upwardly from the well 11 is an upstanding blade-locating rib 13 and spaced from opposite ends of the rib 13 are studs 14 and 15. Four posts 16 project upwardly from the side portions of the base 10. These are utilized by pairs to assist in registering the head of the razor in blade-receiving relation to the magazine.

The spring-locking means for the blades shown in Figs. 1 and 3 comprises a sheet-metal clip 17 formed from a strip of metal which is bent to embrace the body of the base 10 or cast into it so that its inner overhanging ends may project inwardly in opposite directions over the well 11. A spring 18 of flat strip spring stock, bowed upwardly, is provided with a central medial slot 20 in which the rib 13 and the studs 14 and 15 are received with clearance and the

spring itself is slightly shorter than the length of the well 11. The spring 18 is provided in its edges at opposite locations with notches 19, which normally permit the ends of the clip 17 to pass through them with clearance. Interlocking of the clip 17 and the spring 18 in the well 11 is effected by locating the notches 19 of the spring in registration with the ends of the clip, then flattening the spring and finally sliding its endwise so that a solid portion of the spring becomes located beneath the inturned ends of the clip 17 as shown in Fig. 1. Alternatively the spring may be placed within the well 11 and the ends of the clip 17 bent forcibly inwardly and downwardly over a solid portion of the spring at one side of the notches 19, thereby flattening the spring and holding it under tension in an inoperative position. At all times one end of the spring may be reached through the passage 12 in order to slide it endwise and disengage it from the ends of the clip 17 by bringing the notches 19 of the spring into registration therewith. It will, of course, be appreciated that the notches herein shown in the spring and the tongue or tongues supplied by the inturned ends of the clip 17 may be interchanged in location and disengaged by relative movement and still co-operate in the same manner.

The base 10, with its stack of blades confined thereon, is arranged to be inserted bodily into the tubular casing of the magazine which comprises a bottom 22, side walls 23 and inturned flanges 24, which constitute the top of the magazine. An upstanding tongue 25 is punched and turned up in the bottom 22 of the casing near one end thereof. This tongue is of the proper dimensions and location to enter the passage 12 in the end of the base 10 when the latter is inserted in the casing and to act as a stop to arrest the base when it is properly located within the casing as shown in Figs. 2 and 3. A feed slide 26 embraces the casing of the magazine, slides longitudinally thereon and is limited in its path of movement by stop pins 27 projecting upwardly from the flanges 24. The feed slide 26 has blade-engaging portions which extend downwardly between the inner edges of the flanges 24 of the casing herein shown as formed by longitudinal corrugations in the bridge part of the slide.

The magazine herein described is designed to contain double-edged blades 28, each having a centrally disposed medial slot shaped to receive the rib 13 and intermediate enlargements or apertures shaped to receive the studs 14 and 15. These blades are stacked upon the base 10 in staggered relation, that is to say, the solid end of the uppermost blade lies beyond the stud 14 while the solid end of the second blade in the stack lies between the stud 14 and the left-hand end of the rib 13, and so on. The blades are fed from the magazine, first from one end and then from the other, the feed slide acting always on the solid end of the uppermost blade lying between the rib 13 and either the stud 15 or 14, as the case may be.

It will be understood that in loading and assembling a magazine of the construction above described, the spring 18 is first flattened as shown in Fig. 1, and then, while the spring is so held, blades 28 to the desired number are assembled in staggered relation above it. The operation of collecting and locating the blades is, of course, carried out without any danger of displacement of the blade by the flattened spring 18. The base

10, loaded with blades in this manner and with the spring fastened down, is now inserted into the left-hand end of the casing as shown in Fig. 2 and moved to its final location as determined by the tongue 25. The end of the spring 18 which, as seen in Fig. 2, is accessible, may now be reached for purposes of pushing the spring toward the left until its notches 19 register with the inturned tongues of the clip 17. When this occurs, the spring is released and immediately bows upwardly, carrying the stack of blades upwardly until the uppermost blade is brought into contact with the inner face of the flanges 24, this exit position being the proper location for the first blade to be ejected from the magazine.

While the spring 18 may be displaced by hand as above explained, the magazine herein shown is organized so that the tongue 25 of the casing has the function of displacing the spring when the base 10 is inserted to just the proper position to disengage the spring from the ends of the clip 17. This is suggested in Fig. 3, where the end of the spring 18 is shown in contact with the tongue 25 and the spring in its released and bowed position. Accordingly, when the base is inserted in the casing, the spring is automatically released and requires no special attention.

In Fig. 4 is shown the base member of a magazine for single edged blades of a well-known commercial type. The base comprises a flat rectangular plate 30, upturned at one end in an upstanding flange 31. Posts 32 and 33 project upwardly from the plate 30, being arranged to locate the blade stack upon the plate 30 while permitting it to move vertically. Upon the plate 30 is located a spring 34 of flat spring stock but normally bowed upwardly. One corner of the spring is notched to provide a recess 35 for the post 32. The spring is also provided with a slot 36 which receives with clearance the post 33. The spring has also a central rectangular aperture 37 through which extends a tongue 38 struck upwardly from the body of the plate 30 and bent so as to overlie the body of the spring.

The blade 40 is sharpened at one edge and provided with apertures in the shape of the word Valet. Semi-circular recesses 39 are formed in both ends of the blade. The post 32 is properly located to receive with clearance the notches 39 in one end of the blades of the stack while the post 33 is located to pass with clearance through the aperture provided in the body of the blade by the letter "V." It will be seen that the posts 32 and 33 thus will positively determine the position of the blade in the magazine above the spring 34.

Normally, the base, loaded with the desired number of blades, is inserted in a rectangular tubular casing (not shown) and the spring is then released so that it may move the blade stack upwardly and hold the uppermost blade thereof in contact with the top of the magazine. However, the tongue 38 is so arranged that it may be entered through the aperture 37 of the spring and will hold the spring flattened and under tension when the spring is displaced longitudinally by sliding in the appropriate direction upon the plate 30 so that the tongue 38 overlies a solid portion of the spring. The spring is thus held down in a flattened and inoperative position while the base is loaded with blades. The loaded base is then inserted in the casing of the magazine and the spring subsequently slipped toward the right as seen in Fig. 4, until the tongue 38 registers accurately with the aperture 37, there-

upon the spring is freed and immediately bows upwardly lifting the blade stack and holding it in its proper predetermined position while the uppermost blades are fed successively from the stack.

When the spring 34 is latched in its inoperative position as shown in Fig. 4, it projects somewhat beyond the end of the plate 30. Accordingly when the loaded plate or base is inserted in the tubular casing of the magazine, the end of the spring encounters the end wall of the casing and the spring is displaced until the aperture 37 is brought into registration with the tongue 38. The operation of inserting the loaded base, therefore, automatically unlatches the spring 34 without requiring special attention for that step.

It will be understood from the foregoing description that the process of loading the base and assembling the magazine parts is simplified and expedited. It follows as a consequence that the machinery required for assembling the blades and the magazine parts may also be substantially simplified in their construction.

Having thus disclosed my invention and described in detail an illustrative embodiment thereof, I claim as new and desire to secure by Letters Patent:

1. A blade magazine comprising a tubular casing having a slotted cover, a feed slide movable therein, an insertable base having an upstanding blade-locating rib for a stack of slotted blades, a bowed spring adjacent to said rib having notches in its opposite side edges, a clip in the base having inturned ends shaped to pass through the notches of the spring with clearance and engage a solid portion of the spring to hold it in flattened inoperative position, and a stop in the casing for automatically shifting the spring to its disengaged position when the base is fully inserted in its casing.

2. A blade magazine containing blade-locating means adapted to locate a stack of blades therein, stack-actuating means acting through said stack for holding an end blade of said stack in a predetermined exit position and for moving the next blade into exit position upon removal of said end blade, comprising a spring mounted to slide in the magazine and normally expanded for exerting pressure against the other end of said stack, and a stationary device in said magazine located in a position overlying a portion of the spring for temporarily holding that spring under tension in a collapsed inoperative position.

3. A blade magazine containing an upstanding rib for locating therein a stack of apertured blades, stack-lifting means acting through said stack for holding the uppermost blade of said stack in a predetermined exit position and for moving the next blade into exit position upon removal of said uppermost blade, comprising a spring mounted to slide in the magazine and normally expanded for exerting pressure against the lower end of said stack, and a fixed device in said magazine located in a position overlying a portion of the spring for temporarily holding that spring under tension in a collapsed inoperative position.

4. A blade magazine containing upstanding means for locating therein a stack of apertured blades, stack-lifting means acting through said stack for holding the uppermost blade in exit position and for moving the next blade into exit position upon removal of said uppermost blade comprising a bowed spring beneath and normally exerting pressure against the lower end of said stack, and hold-down devices in opposite sides of the magazine for overlying and temporarily holding the aforesaid spring in relatively flattened position wherein it is inoperative to exert pressure against said stack.

5. A blade magazine comprising a tubular casing having a cover, a base inside said casing adapted to carry a stack of blades, and stack-actuating means acting through said stack for holding the uppermost blade of said stack in exit position against and in contact with said cover and for moving the next blade in said stack into exit position upon removal of said uppermost blade, comprising a bowed spring mounted on the base for sliding movement beneath and normally exerting pressure against the lower end of said stack to press the uppermost blade thereof against said cover, and fixed projections in the base shaped to interlock with the aforesaid spring and hold it retracted inside said casing and inoperative, said projections being located in positions overlying portions of the spring.

6. A blade magazine comprising a tubular casing having a cover, a base insertable into said casing and adapted to carry a stack of blades, a spring underlying the blade stack for urging said stack upwardly, spring-latching means initially latching the spring in inoperative position to prevent it from urging said stack upwardly, and spring-shifting means operative on the insertion of the blade-carrying base into said casing for shifting the spring and so unlatching and freeing it to permit it operatively to urge said stack upwardly.

7. A blade magazine comprising an outer enclosing member having a top which determines the path in which blades are fed from the magazine, said enclosing member being adapted to contain a stack of blades, a spring normally bowed into engagement with said stack and tending at all times to move it to a position in which one of its blades lies in the feeding path, the spring being mounted within the enclosed member for sliding movement and a fixed spring-latching device within the magazine overlying a portion of the spring for temporarily latching said spring in flattened condition beneath said stack, thereby holding the spring inoperative and preventing it from acting on said stack, thus clearing the feeding path of blades.

8. A blade magazine comprising a base having a rectangular well in its upper face, a bowed and apertured spring located within the outline of the well and being of less length than the well, blade locating studs in the magazine projecting with clearance through an operture of the spring, and a fixed projection in the magazine overhanging the well and overlying an intermediate portion of the spring, the spring being bodily slidable in the well into interlocking engagement with said projection whereby it may be temporarily held in flattened condition.

9. A blade magazine comprising complementary separable and fitting parts which together provide a blade enclosure, a normally bowed spring mounted to slide on one of said parts and extending beyond a portion of its periphery, overhanging projections on said part holding the said spring in flattened and collapsed condition, and a stack of blades located above the flattened spring, the spring being moved on its part of the magazine by contact with an opposed portion of the other part when the magazine parts are fitted together and in its said movement becoming dis-

engaged from said overhanging projections and lifting the blade stack.

10. A blade magazine comprising complementary separable and interfitting parts, a normally bowed spring carried by one of said parts and projecting beyond a margin thereof, a projection on said spring-carrying part overhanging a portion of said spring and holding it in flattened and collapsed condition, and a stack of blades located above the flattened spring, the spring being slidable on its part of the magazine out from under the overlying projection when the two magazine parts are fitted together, and when disengaged assuming its normally bowed condition and lifting the blade stack.

NICHOLAS TESTI.

REFERENCES CITED

The following references are of record in the file of this patent:

UNITED STATES PATENTS

Number	Name	Date
1,892,931	Conner	Jan. 3, 1933
1,969,945	Rodrigues	Aug. 14, 1934
2,215,008	Kuhnl	Sept. 17, 1940
2,321,570	Billing	June 15, 1943
2,327,120	McCoon	Aug. 17, 1943
2,330,252	Testi	Sept. 28, 1943
2,362,504	Schnitzler	Nov. 14, 1944