PCT WORLD INTELLECTUAL PROPERTY ORGANIZATION
International Bureau

INTERNATIONAL APPLICATION PUBLISHED UNDER THE PATENT COOPERATION TREATY (PCT)

(51) International Patent Classification 6 : **B21B 27/05**	**A1**	**(11) International Publication Number:** **WO 97/03768** **(43) International Publication Date:** 6 February 1997 (06.02.97)

(21) International Application Number: PCT/US96/11339

(22) International Filing Date: 27 June 1996 (27.06.96)

(30) Priority Data:

60/001,310	20 July 1995 (20.07.95)	US
08/655,313	23 May 1996 (23.05.96)	US

(71) Applicant: FATA HUNTER, INC. [US/US]; 6147 River Crest Drive, Riverside, CA 92507 (US).

(72) Inventor: BRAUN, Curt; 1801 Christina Way, Prescott, AZ 86303 (US).

(74) Agent: ELLIOTT, Kyle, L.; Christie, Parker & Hale, L.L.P., P.O. Box 7068, Pasadena, CA 91109-7068 (US).

(81) Designated States: AL, AM, AT, AU, AZ, BB, BG, BR, BY, CA, CH, CN, CZ, DE, DK, EE, ES, FI, GB, GE, HU, IL, IS, JP, KE, KG, KP, KR, KZ, LK, LR, LS, LT, LU, LV, MD, MG, MK, MN, MW, MX, NO, NZ, PL, PT, RO, RU, SD, SE, SG, SI, SK, TJ, TM, TR, TT, UA, UG, UZ, VN, ARIPO patent (KE, LS, MW, SD, SZ, UG), Eurasian patent (AM, AZ, BY, KG, KZ, MD, RU, TJ, TM), European patent (AT, BE, CH, DE, DK, ES, FI, FR, GB, GR, IE, IT, LU, MC, NL, PT, SE), OAPI patent (BF, BJ, CF, CG, CI, CM, GA, GN, ML, MR, NE, SN, TD, TG).

Published
With international search report.

(54) Title: VARIABLE PROFILE CONTROL FOR ROLLS

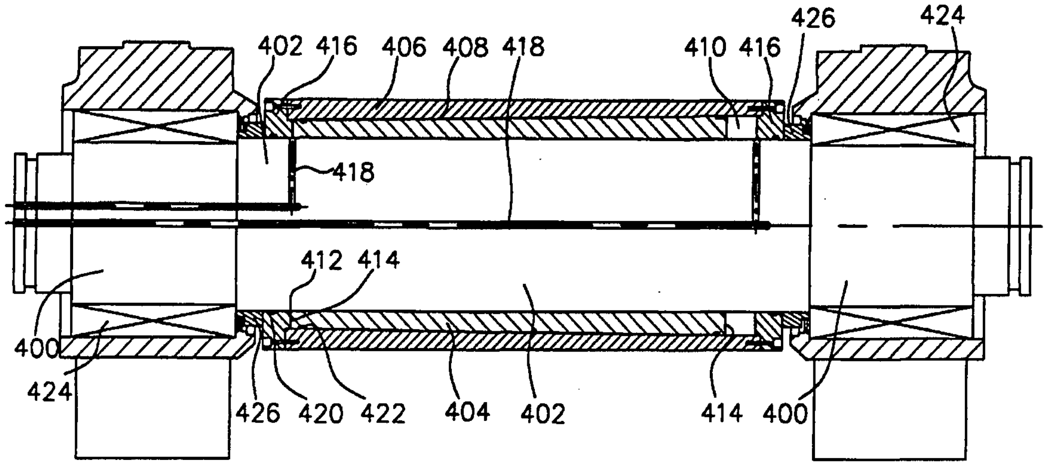

(57) Abstract

A roll (26) with variable profile control for hot and cold rolling mills, strip levelers, coating apparatuses or the like for metals, ferrous and nonferrous, utilizes at least one pair of opposing mating surfaces (404, 406) with camming angles which change continuously along the length of the roll. One embodiment of a roll achieves the continuously changing camming angle by using continuously curved surfaces for the opposing mating surfaces. One of the opposed mating surfaces may be on the roll core (402). Alternatively, a wedge (404) providing one of the opposing mating surfaces is interposed between a shell (406) and a roll core (402). The other opposing mating surface can be provided by the shell (406) or the roll core (402). To control the crown on the roll, either the roll core (402) or the wedge (404) is translated longitudinally.

VARIABLE PROFILE CONTROL FOR ROLLS

Background

This invention relates to variable crown rolls for rolling mills, strip levelers, coating apparatus and the like.

Strip rolling mills, plate rolling mills, and levelers have been used to fabricate, for example, sheet metal. The process involves taking a thick plate or strip of metal, which may be hot or cold, and rolling the metal between two or more rolls. The gap between the rolls is smaller than the thickness of the metal, so that after the metal passes between the rolls, it has a reduced thickness.

The metal may then be passed to a leveler to "level" the metal. The leveler has many rolls arranged into two rows with horizontally offset centers. The metal is passed through the rolls whereby it is flexed up and down. The rolls are positioned so that the amount of flexing decreases as the metal travels to the end of the leveler. In both processes of rolling and leveling, undesirable variations in thickness of the metal can occur, for example, because the rolling loads applied to the longitudinal center of the roll flex or bend the roll between the supports. This rolling or flexing, unless compensated for by a crown on the roll, will produce a product having undesirable variations in thickness across its width. For example, if the rolls are cylindrical, bending of the rolls apart from each other produces a sheet which is thicker in the middle than at the edges. The increased thickness is commonly referred to as "profile". Though a perfectly flat sheet is seldom desirable, the crown must be controlled so that it is uniform over the length of the sheet. The bending of the rolls is approximately compensated for by grinding the rolls with a parabolic profile, for example, so that the rolls are thicker in the middle than at the ends. Then, bending of the rolls effectively makes the gap between the rolls more nearly flat and produces a flatter sheet and controls the profile of the sheet. The increased thickness in the center portion of the rolls is referred to as "crown". A problem remains, however. A rolling mill may be used for metals of different widths, thicknesses, and properties. A fixed crown ground into the roll may not properly compensate for bending for the various products rolled and flat products when desirable may not be uniformly obtained. To better control variations in profile of the metal, the rolls used in the rolling mills can be provided with a means to adjust the crown of the roll.

The function of the crown control on the roll is to shape the outer crown of the roll so that the metal passing through the mill is produced with a flat surface or constant profile and a uniformly reduced thickness. It is ideal for the crown to adjust continuously during the rolling process; so that the process is not stopped to adjust the crown, and the crown can be adjusted nearly instantaneously based on profile data collected from the metal just rolled. If the crown is not adequately controlled, the metal will not have a flat surface or uniform profile, and it must be melted down for reuse.

One apparatus providing a roll with a variable profile utilizes a plurality of rings or "wedges" interposed between a roll core and a sleeve. The rings are angled so that they mate against an angled surface of the sleeve. When the rings are moved longitudinally along the axis of the roll core relative to the sleeve, the angled surfaces interact to either push the sleeve radially outward or allow the sleeve to contract radially inward, thereby varying the profile of the sleeve. The angle on the movable rings is constant along the length of the roll. Thus, to obtain a larger crown in the center of the roll, there must be independently movable rings at the center of the roll. The rings at the center of the roll can then be displaced a greater distance than the outer rings to provide a larger crown in the center of the roll. This is somewhat disadvantageous because of the additional parts required and because high stress concentrations occur at the single point contacts at the edges of the rings.

There are many methods and apparatus for actuating the longitudinal movement of the rings along the axis of the roll. By way of example, one such method is to create sealed hydraulic chambers between the rings and adjust the position of the rings by varying the hydraulic pressure in the chambers. This method requires and is somewhat disadvantageous because many passages must be created in the roll core and seals, which occasionally leak, must be created between the rings and the sleeve and the rings and the roll core.

Thus, increased control in the variation of a roll crown is desirable to enhance the uniformity of the profile over the length of rolled strips, to increase the quality of the product, and reduce the amount of scrap produced. In variable crown rolls utilizing rings or wedges which move longitudinally along the axis of the roll, it is desirable to provide a simplified means for varying the crown of the roll by larger amounts at different locations on the roll more uniformly. It is further desirable to more efficiently move the rings between the roll shaft and the sleeve.

Brief Summary of the Invention

There is, therefore, provided in the practice of this invention a novel roll for a rolling mill or coating machine. The roll comprises a generally cylindrical roll shaft surrounded by a hollow cylindrical shell with a pair of opposing mating surfaces in between the roll shaft and shell. The opposing mating surfaces have contours with camming angles that vary continuously along the length of the roll. There is also a means for translating one of the surfaces relative to the other surface. The translation of one of the surfaces relative to the other varies the crown of the roll.

The means for translating one of the surfaces relative to one of the other opposing surfaces comprises in one embodiment fluid chambers acting on a flange of a wedge interposed between the roll shaft and the shell. An inner fluid chamber acts on the wedge flange to move the wedge flange longitudinally outwardly, and an outer fluid chamber acts on the wedge flange to move the wedge flange longitudinally centrally, that is, toward the center of the roll.

In another embodiment, a single wedge is interposed between the shell and the roll core. There is a fluid chamber on each end of the roll. One fluid chamber acts on the right side of the wedge to move the wedge to the right. The other fluid chamber acts on the left side of the wedge to move the wedge to the left.

Also provided in the practice of this invention is a novel crown control mechanism to control the crown on a leveler. The mechanism comprises a plurality of angled surfaces mating with opposing angled surfaces. At least two of the angled surfaces having different magnitude. A means for translating one of either the angled surfaces or the opposing angled surfaces is also provided.

These and other features and advantages of the present invention will appear from the following Detailed Description and the accompanying drawings in which similar reference characters denote similar elements throughout the several views.

Brief Description of the Drawings

FIG. 1 is a schematic elevational view of a rolling mill;

FIG. 2A is a partial cross-sectional view of a roll core and shell with mating opposing surfaces; the proportions of which are exaggerated for purposes of illustration;

FIG. 2B is an enlarged view of the area designated by the circle 2B in FIG. 2A;

FIG. 3 is a partial cross-sectional view of an alternate embodiment of the roll in FIG. 2A utilizing a split roll core;

FIG. 4 is a partial cross-sectional view of an alternate embodiment of the roll of FIG. 2A utilizing a fixed wedge;

FIG. 5 is a fragmentary cross-sectional view of a roll with a single wedge and a fluid chamber disposed on each end of the roll to translate the wedge;

FIG. 6 is a fragmentary cross-sectional view of a roll with a single wedge and two fluid chambers on the same end of the roll to translate the wedge;

FIG. 7 is a fragmentary cross-sectional view of a roll with two wedges and two fluid chambers disposed on each end of the roll to translate the wedge;

FIG. 8 is a fragmentary cross-sectional view of an alternate embodiment of the roll in FIG. 7 utilizing wedges, each with a continuously curved surface facing the roll core;

FIG. 9 is a perspective view of two wedges illustrating how the wedges mesh together;

FIG. 10 is a fragmentary cross-sectional view of a roll having an external actuator for translating the wedges;

FIG. 11 is a perspective view of the roll neck of the roll in FIG. 10;

FIG. 12 is a cross-sectional view of an alternate external actuator for the wedges for the roll of FIG. 10;

FIG. 13 is a schematic illustration of the rolls of a coating apparatus;

FIG. 14 is a perspective view of an alternate embodiment of the roll neck of FIG. 10;

FIG. 15 is an end view of a further alternate embodiment of the roll neck of FIG. 10;

FIG. 16 is a fragmentary cross-sectional view of a roll utilizing the roll neck of FIG. 14;

FIG. 17 is a fragmentary partial cross-sectional schematic view of a crown control mechanism for a leveler;

FIG. 18 is a fragmentary partial cross-sectional schematic view of an alternate crown control mechanism for a leveler;

FIG. 19 is a cross-sectional plan view of a roll with a single wedge without flanges;

FIG. 20 is a fragmentary partial cross-sectional schematic view of a roll with two wedges utilizing left and right hand threads on the roll and wedges; and

FIG. 21 is a schematic illustration in partial cross-section of a roll utilizing an oil film.

Detailed Description

Figure 1, shows a rolling mill having a supporting structural frame 20, a plurality of rolls, generally designated 22, supported in the support structure with bearings and chocks 24 commonly referred to in the art as bearing-chock assemblies. The exemplary mill shown has four rolls. There are two work rolls 26 which operatively interact to reduce the thickness of a strip of material 28 passing in between the work rolls. The two larger rolls are backup rolls 30 which operatively interact with the adjacent work roll to support and stiffen the work roll. The rolls are rotated on the roll chocks about their central axis by a conventional drive mechanism (not shown) or by frictional engagement with another roll or the workpiece, and the strip of material 28 is passed between the rotating rolls to reduce the thickness of the strip of material. The bearing-chock assemblies, shown in greater detail in FIG. 2A include a bearing with an inner race 32 which fits tightly around a roll shaft, generally designated 34, and an outer race 35 capable of rotation relative to the inner race and which engages the supporting backup roll chocks 37. The bearing chock assemblies are shown schematically and further, they are shown smaller than their actual size relative to the rolls. To obtain a strip of material with a flat surface or a uniform reduced profile, it is desirable to vary the outer crown of one or both of the work rolls in the mill.

To vary the outer roll crown of the work roll, the roll 22 shown in Figure 2A can be employed as any one of the rolls 22 utilized in the rolling mill. Generally, there are two such rolls in a mill, one above the workpiece and the other below the workpiece, i.e., on each side of the workpiece. The adjustable rolls may be either the work rolls or backup rolls. In other types of mills, the adjustable roll can be an intermediate roll. It should be recognized that features shown in FIG. 2A and other of the drawings are exaggerated for purposes of illustration. For example, the actual curvature between a roll core and shell with respect to the roll axis is only a very few degrees or fraction of degrees instead of the sweeping curve illustrated. As a consequence, the relative thickness and thickness variation of the shell are also exaggerated. Further, in the drawings a gap is illustrated between the core and shell, whereas in practice, such a gap is at most minimal and generally is not present at all. The shell is typically tight against the core (or wedge, as described hereinafter).

The roll comprises the roll shaft 34 having a centrally located large diameter roll core 36 and stepped down diameters at the ends forming roll necks 38. The size of the step down is also exaggerated in the Figures, except for FIGs. 19 and 20, for the sake of clarity. The bearing chock assemblies fit around the roll necks to support the roll in the structural frame. A hollow cylindrical shell 40 surrounds the roll core and a portion of the roll necks for some embodiments. A safety guard 42 extends radially inward from the shell and engages the roll neck. The safety guard is attached to the shell with conventional fasteners (not shown).

The internal circumferential surface 44 of the roll shell is continuously curved along the length of the roll, so that it has increased thickness at one end. It will be recognized that when stating that a surface of the roll is continuously curved, reference is made to the shape of the surface in a longitudinal cross section. Essentially all parts of the roll surfaces are curved if viewed in a transverse cross section.

The outer circumferential surface 46 of the roll core opposing the inner surface of the shell is also continuously curved to mate with the inner surface of the shell. When the roll core is translated longitudinally by an external actuator (not illustrated in FIG. 2A) in the axial direction toward the thicker end of the shell, the complementary curved surfaces engage and force the shell to elastically expand radially outward and create or enlarge a crown on the shell. When the roll core is translated away from the thicker end of the shell, the shell is allowed to contract radially inward. The hoop strength of the shell and the rolling forces cause the shell to elastically contract radially inward.

In operation, the roll core and shell are rotated about the center line by a conventional drive mechanism (not shown). To control the profile of the workpiece material being rolled, the crown of the shell is varied by moving the roll core axially within the shell. The curved surfaces of the roll core and shell interact to vary the crown of the shell and thereby control the thickness and flatness of the workpiece material.

The embodiments of the invention shown in FIGs. 2A, 2B, 3-8, 10, 12, 16, 19, and 20 are provided with a pair of mating opposing surfaces according to the present invention as described in the following discussion of FIG. 2B. Referring to the enlarged fragmentary illustration of the camming angles in FIG. 2B, the complementary surfaces are continuously curved so that the camming angle α_c of the surfaces at the center of the roll is larger than the camming angle α_ℓ located toward each end of the roll. Because the central camming angles have a greater magnitude than the outer camming angles, the crown at the center of the roll is increased more than the crown at the ends of the roll for a given longitudinal movement of the core.

The camming angles α of the surfaces are defined by a first line A through a point of interest X on the surface and which is parallel to the centerline B (see FIG. 2A) of the roll and the portion of a second line C which is tangential to the point X on the surface. When defined in this manner, all of the camming angles α in the embodiment shown in FIG. 2A open toward an end of the roll.

The overall contour of the surfaces is determined by finding the camming angle at a finite number of points on the surface. The camming angle at a specific point on the surface is found by taking the desired maximum change in roll radius ΔR at that point and dividing it by the maximum distance ℓ by which the roll core is moved longitudinally in the axial direction. Thus, the relationship can be expressed as a first approximation of angles over the stroke ℓ: $\tan \alpha = \Delta R/\ell$. Where ΔR indicates the variation in shell crown and ℓ indicates the lateral(axial) stroke between the opposing curved surfaces. This provides a result that is essential an average of the angles over the stroke ℓ. The actual equation of the line is expressed as $\tan \alpha = dy/dx$ expressed as $(dR/d\ell)$.

The continuously varying curvature of the surfaces of the core and shell can be considered to resemble half of a cycle of a very long period sine wave. The ends of the curvature are near adjacent positive and negative peaks of the wave where the slope is slight. The center portion of the roll has the greatest slope, i.e. largest camming angle. As a result, deflection of the shell can be greatest in the center where the slope is largest. The curvature is typically not a sine function. The outside of the shell may be ground in the shape of a parabola. The desired change in radius of the outside of the shell at each location along the length to achieve a desired crown is determined empirically as described hereinafter. The result is a curvature that may not be readily expressed mathematically.

The camming angle at any point along the surface is $\tan \alpha = dR/d\ell$. The desired angle over a length of the curved surfaces is related to the maximum deflection of the shell desired at that location and the length of stroke of the core. Some numerical values will be of assistance. Half of the length of an exemplary roll body is 900 mm. The longitudinal stroke of the curved surfaces relative to each other is 50 mm. Thus, in effect, for the full stroke, there are 18 (900/50) triangles of deflection in half of the roll, each extending a distance ℓ in the axial direction and a distance Δ in the radial direction, the distance Δ being the deflection of the shell desired at the location of that triangle.

The maximum radial deflection in the center of the roll is in the order of 0.5 mm. Again, as a practical matter, a preferred manufacturing technique is to assemble a roll core and shell with the shell positioned in the middle of its intended longitudinal average stroke. The outside of the shell is then ground to the desired contour. By shifting the core in one direction the deflection of the center of the roll increases and by shifting in the opposite direction, the center radius decreases. A middle, neutral position for the core relative to the shell is desirable in some mills since it may be desirable to have a negative "crown" for some products where a distinct crown is desired on the workpiece.

Thus, the stroke of the core relative to the shell may be about 50 mm in each direction from the neutral position. For the centermost triangle of radial deflection and stroke, the camming angle is defined by $\tan \alpha = 0.5/50$ resulting in a camming angle α equal to 0.57°. Nearer the ends of the roll, the camming angle will be somewhat less since less deflection is required. With such dimensions the average $\tan \alpha$ from an end of the roll to its center is about half of the maximum camming angle or about 0.29°. Clearly, the camming angle near the end of the roll may be vanishingly small or zero, whereas the camming angle near the center of the roll is appreciably larger since that is the location where the maximum change in crown is desired.

Figure 3 illustrates a split shaft alternative embodiment of the roll of FIG. 2A. The shell 48 is curved so that it has increased thickness at the center. The roll core is split into two halves: a shaft receiving roll core 50 and a shaft roll core 52. The shaft receiving roll core has a connecting shaft receiving bore 54, shown in dashed lines, for receiving a connecting shaft 56 extending internally from the shaft roll core. The shaft 56 slidably fits into the bore 54 to connect the two halves of the roll core. With the shaft extending from the shaft roll core, through the center of the roll and into the bore, the rigidity of the roll is preserved, so that the roll does not disadvantageously deform.

The opposing curved, circumferential surfaces, generally designated 58, of the shell and roll core halves are continuously curved from one end to the center of the roll and have the above stated relationship for camming angles expressed as: $\tan \alpha = dR/d\ell$. In this embodiment, the camming angles open away from the longitudinal center of the roll. When the roll core halves are translated inwardly, the opposing surfaces engage and force the shell to elastically deform radially outward to create or enlarge the crown. Also, the shaft 56 slides farther into the bore, so the bore is made deep enough to allow complete closure of the open distance between the roll core halves. Because the curvature of the surfaces between the shell and halves of the core has a greater slope (defined by the $\tan \alpha = \Delta R/\ell$ relationship) near the center of the roll and less near the ends of the roll, the crown is increased more at the center of the roll than at the ends. When the roll core halves are translated outwardly, the hoop strength of the shell contracts the shell radially inward. Means for sliding one part of the shaft longitudinally relative to the other part of the roll shaft are provided in this embodiment to adjust the roll crown.

Referring to FIG. 4, an annular wedge 60 extending along the length of the roll core is interposed between a roll core 62 and shell 64 of a roll. The shell has a flange 65 at each end which extends radially inward to fix the wedge relative to the shell.

The flanges on the wedges and shell of this and other embodiments can be integral with the wedge or shell or they can be separately attached by conventional fasteners (not shown in most embodiments, but see FIG. 15). The choice of how the flange is attached is largely governed by the assembly constraints of the roll. Another consideration is that the shell must be centered relative to the center line of the mill for most embodiments.

The continuously curved opposing surfaces between the wedge and core have the same relationship $\tan \alpha = dR/d\ell$, but one of the opposing surfaces is the inner circumferential surface 66 of the wedge. The mating opposing surface 68 is the outer circumferential surface of the roll core. The shell 64 has a substantially constant thickness, and the wedge has an increased thickness at one end. The camming angles in this embodiment open toward an end of the roll. When the roll core is translated longitudinally in the axial direction toward the thicker end of the wedge, the mating surfaces engage and force the wedge and shell to elastically expand radially outward to create or enlarge a crown on the roll. When the roll core is translated away from the thicker end of the wedge, the shell and wedge are allowed to contract radially inward. The hoop strengths of the shell and wedge cause the shell and wedge to contract radially inward.

This embodiment provides a further advantage because the shell, which wears out and must be replaced, is more easily and inexpensively fabricated due to it having a constant thickness or ground contour. The more complex curvature of the wedge can be reused.

Referring to FIG. 5, another alternate embodiment utilizing continuously curved surfaces comprises a wedge 70 interposed between the shell 72 and the roll core 74. The wedge is fabricated from steel and coated with polytetrafluoroethylene or the like to lubricate the wedge and facilitate the sliding of the wedge between the roll core and shell. The outer circumferential surface 76 of the wedge and the complementary inner circumferential surface 78 of the shell are continuously curved, and the curved surfaces have the same relationship described above: $\tan \alpha = dR/d\ell$. The magnitude of the camming angle α again increases toward the longitudinal center of the roll, so that a larger crown variation is produced at the center of the roll. In this embodiment, all of the camming angles open toward an end of the roll. Because of the curved surface, the shell increases in thickness toward an end.

To increase the crown on the roll, the wedge is translated longitudinally in the axial direction toward the thicker end of the shell. Translating the wedge away from the thicker end reduces the crown. Means for translating the wedge are discussed below.

The embodiment shown in FIG. 6 has a wedge 80 interposed between a shell 82 and a roll core 84. The opposing complementary surfaces of this embodiment comprise the inner circumferential surface 86 of the wedge and the outer circumferential surface 88 of the roll core. In this embodiment, the camming angles open toward an end of the roll. This embodiment, like the embodiment of FIG. 4, provides a further advantage because the shell, which wears out and must be replaced, is more easily and inexpensively fabricated due to it having a constant thickness. The fabrication of the roll core is made more costly by making the outer circumferential surface curved, but that cost increase is offset by the reduction in cost from fabricating the shells with a constant thickness.

Referring to FIG. 19, an actual roll with a roll neck 400 of only slightly less diameter than the roll core 402 has an annular wedge 404, without flanges, interposed between the roll core and the shell 406. Further, the opposing curved surfaces 408 between the wedge and shell represent an actual curve. Because it is frequently undesirable to have any change in crown at the ends of the roll, the curve of the opposing surfaces may be flat at the ends so that there is no camming angle. Annular fluid chambers 410,412 are interposed between the ends 414 of the wedge and the shell flanges 416. The flat portion of the curve preferably would extend over the entire length of the fluid chambers. Fluid passages 418 extend axially through the roll neck and roll core until they are positioned radially inward from the outer edges of the fluid chambers which are defined by the shell flanges. The fluid passages then extend radially outward to the surface of the roll core and the fluid chambers. Static seals 420 are provided between the roll core and the shell flange, and dynamic seals 422 with backup rings (not shown) are provided between the slidable wedge 404 and the fixed shell 406. The shell is fixed between the bearings 424 by bearing spacers 426. The roll neck shown is not tapered; however, for steel mills the roll necks are preferably tapered, and the roll necks of the embodiments in FIGs 5, 6, and 19, for example, may be cylindrical or tapered where the roll necks are engaged by bearings.

When a single wedge traversing the length of the roll core is used, it is apparent that there is some asymmetry in the roll. The asymmetry can be compensated for in two ways. An equal and oppositely asymmetrical roll can be used as the other work roll or backup roll to counterbalance the effects of the asymmetry, or the effects of asymmetry can be calculated and the shape of the curved surfaces determined to minimize asymmetrical deformation. Alternatively, two wedges providing a symmetrical roll can be used.

Figure 7 illustrates such an embodiment where a roll utilizes two wedges and is symmetrical for any given shift of the wedges. FIG. 7 further illustrates an embodiment where opposing continuously curve mating surfaces, generally designated 90, according to the present invention are provided on the outer circumferential surface 85 of two wedges 92, and the inner circumferential surface 81 of the shell 94.

In FIG. 8, an alternative embodiment of the roll of FIG. 7 achieves the same reduction-in-cost advantage as FIG. 6 by locating the opposing mating surfaces 90 on the outer surface 89 of the roll core 87 and inner surface 91 of the wedges 93 to reduce the cost of fabricating replacement shells 95. Both of the embodiments of FIGs. 7 and 8 utilize curved opposing mating surfaces defined by the relationship $\tan \alpha = dR/d\ell$ and have camming angles α increasing in magnitude toward the longitudinal center of the roll. The camming angles of FIG. 7 open away from the longitudinal center of the roll while the camming angles of FIG. 8 open toward the longitudinal center of the roll.

In the two wedge embodiments of the roll shown in FIGs. 7, 8, and 20, an open space or gap 99 is left between the wedges when the wedges are not in the maximum crown position. This could leave the center of the shell with no support which could lead to an adversely shaped crown. This problem is accentuated if the shell is an older shell that has had the outer surface ground several times thereby reducing the thickness and the rigidity of the shell. Therefore, in the double wedge roll illustrated in FIGs. 7 and 8, an alternate embodiment of the wedges 98 is crenelated with protrusions 100 and apertures 102 as shown in FIG. 9. Even when the wedges are in the position where there is no enhanced crown, the protrusions 100A of wedge 98A extend into the apertures 102B of wedge 98B, and the protrusions 100B extend into the apertures 102A. Thus, the protrusions mesh together to provide spaced central support for the shell where there would otherwise be none, and therefore prevents adverse crowning on the roll. The single wedge rolls shown in FIG. 5 and 6 provide this advantage over the two wedge rolls. There is no gap at the center of the roll.

Longitudinal translation of wedges for radially deflecting a roll shell is achieved in various ways. Referring first to FIG. 5, there is one continuous wedge 70 covering the length of the roll core 74. The wedge has flanges 150 extending radially inward and sealably engaging the cylindrical roll neck 152. The portions of the roll neck engaged by the bearings may be cylindrical or tapered. The wedge flanges 150 are sealed against the roll neck with an O-ring 154 or other conventional means. Also, the inner circumferential surface of the wedge is sealed with an O-ring 156 against the outer circumferential surface of the roll core at the ends of the roll core. However, there is no seal between the outer circumferential surface of the wedge and the inner circumferential surface of the shell. Thus, there are two fluid chambers 160, 162 defined radially between the outer circumferential surfaces 158 of the roll necks and the inner circumferential surface 164 of the wedge. The chambers are defined axially by the flanges of the wedge and the radially extending surfaces 166 at the junctions between the roll necks and the roll core.

Individual fluid passages 168, 169 through the roll shaft connect each fluid chamber to a fluid source, and end drain lines 170 through the roll shaft connect open cavities 172 between the flanges and roll shell to the atmosphere. The drain lines prevent pressure from building in the cavities, thereby avoiding unwanted axial movement of the wedge and unwanted variation of the roll crown. A central drain line 174, shown partially, runs through the roll shaft to the gap between the wedge and roll core at a location between the two fluid chambers. This fluid drain line prevents fluid pressure from building up between the wedge and roll core which could alter the roll crown if oil were to leak through the seals 156. The roll could be provided with seals, so that fluid is introduced into the outside cavities 172. Fluid in the outside cavities provides additional hydraulic pressure to move the wedge.

To control the profile of the workpiece material, the crown of the shell is varied by moving the wedges axially in between the shell and roll core. The curved surfaces of the wedge and shell interact to vary the crown of the shell and thereby control the profile of the workpiece material. The longitudinal movement of the wedge is actuated by changing the oil pressure in the fluid chambers 160, 162.

To move the wedge toward the thicker end of the shell and increase the roll crown, fluid is forced through the fluid passage 169 and into the fluid chamber 162 on the same end of the roll as the thicker end of the shell. The increased pressure pushes on the wedge flange 150 which is a boundary of the fluid chamber 162. Because only the wedge flange is free to move and only longitudinally in the axial direction, the wedge is moved toward the thicker end of the shell. Splines may be provided between the roll core and the wedges, or between the shell and the wedges, depending on the embodiment, to restrict rotational motion therebetween. If the opposing curved surfaces are between the wedges and shell, then the splines would be between the wedges and core, and if the opposing surfaces are between the core and wedges, the splines would be between the wedges and the shell.

To move the wedge away from the thicker end of the shell and decrease the roll crown, fluid is forced through the fluid passage 168 and into the fluid chamber 160 on the opposite end of the roll as the thicker end of the shell. The increased pressure pushes on the wedge flange 150 which is a boundary the fluid chamber 160. Because only the wedge flange is free to move and only longitudinally in the axial direction, the wedge is moved away from the thicker end of the shell. Therefore, adjustment of the fluid pressure in the fluid chambers controls the translation of the wedge in opposite directions. If the cavities 172 are used as fluid chambers, the fluid pressure in the cavities would be adjusted inversely to the adjacent fluid chambers 160, 162.

FIG. 6 illustrates another embodiment in which fluid chambers are used to actuate translation of the wedge 80. The shell 82 has a flange 178 at one end extending radially inward toward and sealably engaging the roll neck 184 by means of an O-ring 186. The roll neck may be cylindrical or tapered where the bearings engage the roll neck. The generally cylindrical wedge 80 extends along the full length of the roll core. On the same end of the roll as the shell flange 178, the wedge has a flange 182 extending radially inward toward and sealably engaging the roll neck 184 by and O-ring 188.

On the end of the roll where the shell flange seals against the roll neck 184 and the wedge flange seals against the roll neck, the outer circumferential surface of the roll core is sealed against the inner circumferential surface of the wedge by an O-ring 190, and the outer circumferential surface of the wedge is sealed against the inner surface of the shell by an O-ring 192. The seal rings are located such that neither fluid chamber extends an appreciable length along the wedge. Thus, there are two fluid chambers, one fluid chamber 194 inward from the wedge flange and one fluid chamber 196 outward from the wedge flange.

The outer fluid chamber 196 is defined radially by the outer circumferential surface 198 of the roll neck and the inner circumferential surface 200 of the shell. The outer fluid chamber is defined axially by the shell flange and the wedge flange. The inner fluid chamber is radially defined by the outer circumferential surface 198 of the roll neck and inner circumferential surface of the wedge 202. The inner chamber is axially defined by the wedge flange and the radially extending surface 204 at the junction between the roll neck and the roll core.

There are three hydraulic fluid passages 206, 208, 210 through the roll necks. Two passages 206, 208 are fluid lines that connect the fluid chambers to an oil reservoir (not shown). The third passage 210 is a drain line which prevents unwanted fluid pressure from occurring in the cavity 212 at the other end of the roll. The unwanted fluid pressure can lead to undesirable variations in the roll crown caused by movement of the wedge or by the pressure acting directly on the shell.

Longitudinal translation of the wedge in the axial direction is actuated by changing the oil pressure in the fluid chambers. To move the wedge toward the thicker end of the roll core, fluid is forced through the outer fluid passage 208 and into the outer fluid chamber 196. Increased pressure in the outer fluid chamber pushes against the flange of the wedge, the circumferential surfaces 198, 200 of the roll neck and shell, and the flange of the shell. Because only the wedge is free to move and only in the axial direction, the force from the fluid pushes against the outer wall 214 of the wedge flange and translates the wedge toward the thicker end of the roll core thereby increasing the crown on the roll.

To move the wedge away from the thick end of the roll core, fluid is forced through the inner fluid passage 206 and into the inner fluid chamber 194. Increased pressure in the inner fluid chamber pushes axially against the roll core and wedge, and circumferentially against the surfaces 198, 202 of the roll neck and wedge. Because the wedge cannot be moved radially and the roll core cannot be moved radially or axially, the fluid forces the wedge to translate away from the thick end of the roll core, thereby decreasing the crown on the roll. The wedges of the embodiment of FIG. 19 are translated as described above with the exception that the fluid pressure acts on the ends 414 or at least one end of the wedge instead of a wedge flange.

The embodiments shown in FIGs. 7 and 8 translate the wedges 92, 93 in the same way, therefore, the translation of the wedges of FIGs. 7 and 8 will only be described once. The roll has an annular curved wedge 92 at each end of the roll, leaving a gap 99 in the middle of the roll between the two wedges, roll core, and shell. Each wedge has a flange 218 extending radially inward toward and sealably engaging the roll neck 220 with a seal 222. The outer surface of each wedge is sealed against the inner surface of the shell at the outer end of each wedge by a seal 224, and the inner surface of each wedge is sealed against the surface of the roll core at the ends of the roll core by a seal 226. The shell has flanges

219 on both ends of the roll extending radially inward toward the roll neck. Each shell flange is sealed 228 against the roll neck. Thus, there are four fluid chambers.

Two chambers are located on each end of the roll. There is an outer fluid chamber 230 located at each end of roll which is defined radially by the outer circumferential surface 232 of the roll neck and the inner circumferential surface of the shell 234. The outer fluid chambers are defined axially by the flanges of the shell and the flanges of the wedges. There is also an inner fluid chamber 240 located at each end of the roll which is positioned inward on the roll from the outer chamber. The inner fluid chambers are radially defined by the outer circumferential surface 232 of the roll necks and inner circumferential surface 242 of the wedges. The inner chambers are axially defined by the flanges of the wedges and the radially extending surfaces 244 at the junctions between the roll necks and the roll core.

There are five passages formed in the roll shaft. Four of the passages are fluid lines that connect the four fluid chambers to oil reservoirs, and the fifth passage is a drain line 246 that vents the middle of the roll core to atmosphere. The drain line prevents pressure build up at the center of the roll which could cause unwanted variations of the roll crown.

To control the profile of the workpiece material, the crown of the shell is varied by moving the wedges axially in between the shell and roll core. The curves of the wedges and shell (FIG. 7) or the wedges and roll core (FIG. 8) interact to vary the crown of the shell and thereby control the profile of the workpiece material. The axial movement of the wedges is actuated by changing the oil pressure in the fluid chambers. The amount of axial movement and the position of the wedges is monitored by proximity gauges 247 or the like suitably placed in the fluid chambers.

To move the wedges inwardly, fluid is forced through the outer fluid passages 248 into the outer fluid chambers 230. Increased pressure in an outer fluid chamber pushes against the flange of the wedge, the circumferential surfaces 232, 234 of the roll neck and shell, and the flange of the shell. Because only the wedge is free to move and only in the axial direction, the force from the fluid pushes against the outer wall 250 of the wedge flange and moves the wedge axially toward the center of the roll thereby increasing the roll crown.

To move the wedges outwardly, fluid is forced through the inner fluid passages 252 and into the inner fluid chambers 240. Increased pressure in an inner fluid chamber pushes against the roll core, wedge flange, and circumferential surfaces 232, 242 of the roll core and wedge. Because the wedge can be moved longitudinally and the other surfaces are fixed, the fluid forces the wedge to move longitudinally outward thereby decreasing the roll crown. Therefore, adjustment of the fluid pressure in the fluid chambers controls the axial movement of the wedges.

If two wedges are used and the wedge flanges are not desirable, the spaces 99 between the wedges can be bifurcated, sealed, and used as a centrally located fluid chambers. Fluid chambers would also be formed at the outer ends of the wedges between the ends of the wedges and the shell flanges (see fluid chamber 410 in FIG. 19). If the pressure is increased in the central fluid chambers and decreased in the outer fluid chambers, the wedges would be moved outwardly. If the pressure is decreased in the central fluid chambers and increased in the outer fluid chambers, the wedges would be translated inwardly.

Although internal fluid chambers have been described as the means for translating the wedges, external actuators such as rotating hydraulic cylinders can also be used, as illustrated in FIG. 10. The roll of FIG. 10 comprises a cylindrical roll shaft, generally designated 254, with a central large diameter roll core 256 and stepped down diameters at the ends forming roll necks 258. The roll necks, as illustrated in FIG. 11, each have a plurality of splines 260 extending radially outward. The use of splines 260 is intended for low force applications such as a strip coating apparatuses to be discussed below. A hollow cylindrical shell 262 surrounds the roll core and the portion of each roll neck which is closest to the roll core. The inside of the shell is curved, so that it has increased thickness at its center. An annular generally cylindrical wedge 264 is interposed between the shell and the roll core at each end of the roll, leaving a gap 266 in the middle between the wedges, roll core, and shell. Because the two ends of the roll are identical, the roll is described by reference to a single end.

The wedge has a flange 268 extending radially inward toward the roll neck. The flange engages a plurality of bars or keys 270 which form a cage fitting between the splines and extend longitudinally outward beyond the roll neck. The bars are preferably fabricated from bronze because of how bronze interacts with the steel roll shaft. For example, there is no galling between steel and bronze. The outward ends 272 of the bars are attached to a circular plate 274, and the circular plate is engaged by a hydraulic cylinder 276 for actuating the longitudinal movement of the wedge. A shaft connector 284 is provided to facilitate the engagement of the circular plate by the shaft 286 of the hydraulic cylinder.

A pair of circumferential roll chocks 278, 280 support the bearings 282 and in turn the roll necks. The inner race of the bearing fits around the roll neck splines allowing no relative movement between the inner race of the bearings on the roll neck and provides a clearance of about 1/4 mm between the bearing and the bars, thus allowing the roll shaft to rotate with the bearing and the bars to translate in the axial direction between the splines. An alternate solution provides splines between the wedge and the roll core or between the wedge and the shell with a solid wedge sleeve surrounding the roll neck (replacing the bars) extending from the wedge flange to the actuator.

In operation, the roll shaft, shell, and wedges are rotated about the centerline by a drive mechanism (not shown) or frictional engagement with other rolls or the workpiece. The external actuator can rotate with the roll or it can remain rotationally fixed if an appropriate thrust bearing is provided. To control the profile of the workpiece material, the crown of the shell is varied by moving the wedges axially in between the shell and roll core.

The curves of the wedge and shell interact to vary the crown of the shell and thereby control the profile of the workpiece material. The longitudinal movement of the wedge is actuated by an external operator, namely the hydraulic cylinder. Because the shear forces at the connection between the wedge flange and the bars are high, especially when the wedge is being forced inward, the bars have protrusions 288 which engage annular recesses 289 in the wedge flanges.

The hydraulic cylinder can be replaced by another external actuator shown enlarged in FIG. 12. The structure of the roll is substantially the same as FIG. 10, so the structure of the roll is described only as it becomes necessary to the explanation of the actuator, and again, this embodiment is intended for relatively low force applications. The mechanical actuator, generally designated 290, comprises a reversible motor 292 (hydraulic or electric), an annular internally threaded member 294, an annular externally threaded member 296, a motor gear 298, and a transfer gear 300. The internally threaded member 294 is attached to any surface that is fixed relative to the roll shaft 304. The roll chock 302, is fixed relative to the roll shaft and is conveniently located close to the roll shaft, so the internally threaded member is attached to the roll chock. The motor is fixed to the internally threaded member. Therefore, the roll rotates independently from the actuator.

A motor shaft 306 extends from the motor and terminates in the motor gear 298. The teeth of the motor gear engage the teeth of the transfer gear 300. The transfer gear is annular and has the same internal diameter as the internal diameter of the externally threaded member 296 to which it is attached. The internal diameter of the internally threaded member is substantially the same as the external diameter of the externally threaded member, so that, the externally threaded member is threaded into the internally threaded member. The outer edge 307 of a circular plate 308 fits between the opposing surfaces of the transfer gear and externally threaded member, and is engaged between the surfaces by an outer friction bearing surface 310 and an inner bearing surface 316 which allow the circular plate and the roll to rotate relative to the transfer gear and externally threaded member. A shim 312 is provided between the externally threaded member and the transfer gear to assure the proper spacing between the opposing surfaces to receive the circular plate. Finally, a guard 314 surrounds the mechanical actuator for safety purposes.

When the motor is turned on, rotation is imparted from the motor to the motor shaft, motor gear, transfer gear, and finally to the externally threaded member. The rotation of the externally threaded member 296 causes it to thread in or out of the internally threaded member 294. When increased crown is required the motor is rotated in a first direction so that the externally threaded member is threaded into the internally threaded member. As the externally threaded member threads in, the outer friction bearing surface of the transfer gear pushes inwardly on the circular plate. Because the circular plate is connected to the wedge 218, the wedge is moved toward the center of the roll thereby increasing the roll crown.

When decreased crown is required, the motor is rotated in a second direction opposite to the first direction so that the externally threaded member is threaded out of the internally threaded member. As the externally threaded member threads out, the inner friction bearing surface of the externally threaded member pushes outwardly on the circular plate. Because the circular plate is connected to the wedge 218, the wedge is moved outwardly on the roll, thereby decreasing the roll crown.

To increase the forces in which this embodiment can be utilized, variations of the splines are utilized as shown in FIGs. 14 and 15. The roll neck 350 has a solid outer surface with an annular recess 352 between the roll neck and the roll core 354. A plurality of apertures 356 extended through the roll neck at a uniform radial depth in the roll neck, so that they open into the recess 352. The apertures can be circular as shown in FIG. 14, or the apertures can have other shapes such as the trapezoidal apertures 358 as shown in the roll neck 360 of FIG. 15.

Referring additionally to FIG. 16, bars 362 extend through the apertures 356 and engage an annular flange 364 of the annular wedge 366 or the bars could engage the wedge directly if an increased diameter of the roll neck is required. The outer end of the bars engage an annular ring 368 or a circular plate. One or a plurality of actuators 370 translates the assembly comprising the ring, bars, flange, and wedge relative to the roll core 354 and roll shell 372. The actuators may rotate with the annular ring relative to the roll chock 374, or the piston 376 of the actuator can slide against the annular ring.

To control the roll crown as the rolling mill is operating, conventional proximity and location sensors 247, such as LVDTs or the like, can be provided for sensing the position of the wedges, and conventional beta or X-ray gauges or the like can be utilized to determine the uniformity of thickness and flatness of the workpiece material. The preferred placement for a position sensor is between the wedge and roll shaft. The thickness data can be evaluated by an appropriate computer program to determine how much and which way to move a wedge if an undesired profile variation in the rolled material is detected by the gauges.

Figure 20 illustrates an alternate embodiment for axially translating two wedges 430, 432 relative to shell 434 thereby varying the crown of the roll. The roll core 436 has right hand threads, generally designated 438, on one half of the roll core and left hand threads, generally designated 440, on the other half of the roll core. One of the wedges 432 is threaded to mate with the right hand threads, and the other wedge 430 is threaded to mate with the left hand threads. Thus, when the roll core is rotated relative to the wedges, the wedges move axially in opposite directions. When, looking from the right end of the roll and the roll core is rotated clockwise relative to the wedges, as illustrated by arrow 444, the wedges are translated inwardly, and when, again locking from the right end of the roll, the roll core is rotated counter clockwise relative to the wedges, opposite arrow 444, the wedges are translated outwardly.

The wedges are fixed rotationally relative to the shell by key ways 442 or splines. The key ways allow the wedges to slide axially relative to the shell but prevent rotation between the shell and wedge, so that the roll core can have a relative rotational speed to the shell and wedges. The entire roll assembly shown, excluding the chock 446 is rotating during operation. When a relative rotation is imparted on the roll core, the wedges thread in or out depending on the direction of the relative rotation, and slide axially relative to the shell. To impart the relative rotation on the roll shaft, a means for imparting relative rotation to the roll shaft is provided. The relative rotation means preferably comprises a reversible motor 448 attached to the rotating portion of the bearing 450, so that the motor rotates with the assembly. A gear 452 meshes with the roll neck 454, so that the motor, when activated, imparts rotation to the roll core. Because the motor is fixed to the rotating bearing, rotation imparted to the roll core by the motor causes the roll core to rotate relative to the wedges. Several motors may be spaced around the circumference of the roll and at both ends of the roll to provide the torque required to rotate the roll core.

The invention has been described in the context of a rolling mill roll. There are other applications where it is desirable to have adjustable crown control for a roll. Use in a strip leveler will be discussed in detail below. Another important application is in a strip painting or coating machine. Present coating lines may apply up to $20,000,000 worth of coating material in the course of a year. Often bending of the rollers which apply the paint can leave an undesired crown in the coating. The resulting increase in thickness of the center of the coating can involve a five percent increase in the amount of coating material used. Elimination of the crown in the coating by crown control of the paint roll could save up to $1,000,000 per year.

In a strip coating apparatus as indicated in the schematic drawing of FIG. 13, when coating the "top" face of the strip, the strip 120 passes between a backup roll 121 and an applicator roll 122 which applies paint to one side of the strip. The applicator roll is adjacent to a pickup roll 123 which dips into a pan 124 which contains a coating material 125 applied to the strip. In some cases an intermediate metering or transfer roll 130 is employed between the pickup roll and the applicator roll for transferring coating material between the rolls and assisting in determining the thickness of coating material applied to the strip.

When coating the "bottom" face of the strip, there is an applicator roll 126 on only the bottom face of the strip. In a similar manner, the bottom applicator roll is adjacent to a pickup roll 127 which dips into a pan 128 which contains a coating material 129 for application to the bottom face of the strip. Likewise, a transfer roll may be used between the pickup and bottom applicator rolls. The axes of the rolls may be in a line to the backup roll or offset as shown in FIG. 13.

A roll with adjustable crown may be used for either of these applicator rolls, for a paint transfer roll, or possibly for the backup roll. An exemplary strip coating apparatus is described and illustrated in U.S. Patent No. 5,413,806, the subject matter of which is hereby incorporated by reference.

Because levelers utilize relatively small rolls, the above-described embodiments may be difficult to incorporate into leveler rolls. An alternate embodiment for levelers is shown in FIG. 17. A backup roll 500 supports the work roll 502. The backup roll comprises annular grooves 504 to receive bearings 506. The backup roll sections 514 separating the bearing grooves and located at the ends of the backup roll have a larger diameter than the bearings and contact the work roll. The crown control mechanism, generally designated 508, comprises a substantially unbendable fixed bar 510, first and second plurality of opposing angled surfaces 516, 518 on bearing bars 512 and intermediate threaded bars 520 respectively, a continuous threaded shaft 522, and threaded backing bars 530, 532. The backing bars slide over and extend transversely from the fixed bar. Alternatively, the backing bars would be attached to a sliding member which slides against the fixed bar. For the mechanism to function, it is only necessary for the backing bars to interact with the fixed bar, so that the backing bars cannot move away from the backup roll. On the ends opposite the fixed bar, half of the backing bars 530 have right hand threads 528 engaging the right hand threaded half 526 of the shaft. The other half of the backing bars 532 have left hand threads 534 to engage the left hand threaded half 524 of the shaft. The intermediate threaded bars 520A, 520B, and 520C have left hand threads 536 to engage the left hand threaded shaft 524, and the intermediate threaded bars 520D, 520E, and 520F have right hand thread 538 to engage the right hand threaded shaft 526. Thus, the threaded shaft is interposed between the threads of the threaded backing bars and the threads of the intermediate threaded bars. On the threaded bars opposite the threaded shaft, the angled surfaces 518 engage and mate with the angled surfaces 516 of the bearing bars. The bearing bars engage the bearings.

The angles of the opposing surfaces change over the length of the mechanism to simulate the curved opposing surfaces described in the previous embodiments. Preferably, at least two of the sets of mating angles are angles of different magnitude. The outermost camming angles β of bars 520A and 520F are the smallest because the smallest deflection is desired at the ends of the roll. The camming angles α of the bars 520B and 520E adjacent to and inward from the outermost angles β are a little larger than the angles β. The middle bars 520C and 520D have the largest camming angles ϵ to obtain the greatest deflection. Thus, the angles have the relationship $\beta<\alpha<\epsilon$. Other bars could be added to the mechanism with opposing angles intermediate in magnitude and location to β and ϵ. In this embodiment, all the angles open toward the center of the roll.

To increase the crown on the roll, the shaft is rotated in the direction of arrow 540, which is clockwise when the shaft is viewed from the right. Thus, the means for translating one plurality of angled surfaces relative to the other plurality of angled surfaces includes a means for rotating the threaded shaft. The clockwise rotation of the shaft moves the backing bars and threaded bars outwardly, so that the opposing angled surfaces engage and push the bearing bars away from the shaft thereby bending the backup roll and varying the crown of the work roll to control the profile of the workpiece. The substantially unbendable bar prevents the backing bars from translating away from the rolls, so that the bearing bars are forced to translate toward the rolls thereby bending the rolls. To decrease the crown on the roll, the shaft is rotated counter clockwise when viewed from the right end of the roll. If the angles open outwardly toward the ends of the roll, the shaft would be rotated in the opposite directions described to vary the crown as desired.

In the embodiment of FIG. 18, the camming angles β, α, and ϵ of the opposing surfaces 542, 544 all open to one end of the roll. The crown of the work roll 550 is varied similarly to the previous embodiment of FIG. 17. The backing bars 552, instead of being threaded, are fixed to a sliding member or sliding shaft 554 which is prevented from bending by a substantially unbendable fixed bar 556. Further, the backing bars terminate with the opposing surfaces 544. Bearing bars 558 engage bearings 560 located in bearing grooves 562 of the backup roll 564. Larger diameter sections 566 of the backup roll located between the bearing grooves engage the work roll. When the sliding shaft is translated to the right as shown by arrow 568, the roll crown is decreased because the opposing surfaces disengage. When the sliding shaft is translated to the left, opposite the direction of arrow 568, the opposing surfaces are brought further into engagement, the backup bar is bent, and the crown of the work roll is increased.

Thus, a roll for use in a rolling mill, coating apparatus, or sheet leveler and a crown control mechanism for a sheet leveler are disclosed which utilize a pair of opposing complementary curved or angled surfaces to more effectively obtain the desired roll crown. Furthermore, effective apparatuses are disclosed for actuating movement of wedges interposed between a roll core and shell. Both the adjustable roll and the actuating apparatuses can be used in strip rolling mills, plate rolling mills, strip levelers, coating apparatus, and other apparatuses requiring crown control on a roll.

An advantage of the roll with adjustment wedges between a roll core and shell is that it can be readily employed in conventional rolling mills, coating machines and the like with only a rather small amount of modification. Thus, an existing mill or the like can be retrofitted with a variable crown roll or rolls without incurring the cost of an entirely new mill with other means for controlling workpiece profile.

To reduce the force required to translate the wedges, shell, or roll core, depending on the embodiment, an oil film is forced in between the members of the roll which move past each other. In FIG. 21, the roll core 600 is translated relative to the shell 602, and an oil film 604 is forced in between the shell and roll core through a plurality of oil passages 606. The oil pressure in the passages is on the order of 10,000 psi. The number of oil passages depends on the length of the roll and the pressure required. If high roll pressures are required, it is necessary, for some embodiments, to place partitions or seals between the oil passages, so that fluid is not forced out of any one area of the roll. In this embodiment, separate supply oil lines 608 would also be provided. Thus, the smaller the space required between partitions, the more passages required. In this embodiment, the roll does not rotate. The roll only translates side to side as shown by arrow 610 to adjust the crown. Thus, the shell, which is powered by frictional engagement with another roll or the workpiece or by a drive mechanism (not shown), rotates around the core.

Seals 612 are provided at the edges of the roll core to keep the oil between the shell and the core. If the roll core is shifted by external means then outer passages 614 act as drain lines. If the cavities 616 are utilized as fluid chambers to move the roll core, the outer passages 614 would be oil lines, and additional seals 618 would be provided between the shell bearings 620 and the roll neck 622. This embodiment is adaptable to use with wedges which are interposed between the shell and roll core. The wedges may rotate with the shell or remain rotationally fixed with the core.

While embodiments and applications of this invention have been shown and described, it would be apparent to those skilled in the art that many more modifications are possible without departing from the inventive concepts herein. It is, therefore, to be understood that within the scope of the appended claims, this invention may be practiced otherwise than as specifically described.

WHAT IS CLAIMED IS:

1. A variable crown roll comprising:

a generally cylindrical roll shaft;

a hollow generally cylindrical shell circumferentially surrounding at least a principal portion of the length of the roll shaft;

at least one pair of opposing mating surfaces interposed between the roll shaft and the shell and having complementary contours with camming angles that vary continuously along a portion of the length of the roll; and

means for translating one of the mating surfaces relative to the other one of the mating surfaces whereby translation of one of the surfaces relative to the opposing surface varies the external crown of the roll shell.

2. The roll according the claim 1 wherein the camming angles vary continuously along substantially the entire length of the roll.

3. The roll according the claim 1 wherein the camming angles along each half of the roll length vary continuously from an end of the roll to the center of the roll.

4. The roll according to claim 1 wherein the camming angles increase in magnitude toward a longitudinal center of the roll.

5. The roll according to claim 1 wherein the camming angles are defined approximately by the relation $\tan \alpha = \Delta R/\ell$ where α is the camming angle, ΔR is the radial deflection at a location along the length of the roll, and ℓ is the stroke of translation of one of the mating surfaces.

6. The roll according to claim 1 wherein the camming angles open toward a longitudinal center of the roll.

7. The roll according to claim 1 wherein the camming angles open away from a longitudinal center of the roll.

8. The roll according to claim 1 wherein one of the opposing surfaces comprises an outer surface of the roll shaft and the other opposing surface comprises an inner surface of the shell.

9. The roll according to claim 1 further comprising an annular wedge interposed

between the shell and the roll shaft, and wherein the pair of mating surfaces comprises an inner surface of the wedge and an outer surface of the roll shaft.

10. The roll according to claim 9 wherein the wedge extends along the entire length of the roll.

11. The roll according to claim 1 further comprising an annular wedge interposed between the shell and the roll shaft, and wherein the pair of mating surfaces comprises an outer surface of the wedge and an inner surface of the shell.

12. The roll according to claim 11 wherein the wedge extends along substantially the entire length of the roll.

13. The roll according to claim 1 comprising a pair of annular wedges, each wedge extending along approximately half of the length of the roll, and wherein the pair of mating surfaces comprises inner surfaces of the wedges and an outer surface of the roll shaft.

14. The roll according to claim 13 wherein each of the wedges comprises axially extending protrusions mating with axially extending protrusions on the other wedge adjacent to the center of the roll, whereby central portions of the wedges mesh together to support the center of the shell.

15. The roll according to claim 1 comprising a pair of annular wedges, each wedge extending along approximately half of the length of the roll, and wherein the pair of mating surfaces comprises outer surfaces of the wedges and the inner surface of the shell.

16. The roll according to claim 15 wherein each of the wedges comprises axially extending protrusions mating with axially extending protrusions on the other wedge adjacent to the center of the roll, whereby central portions of the wedges mesh together to support the center of the shell.

17. The roll according to claim 1 wherein the roll shaft comprises a split shaft and the translating means comprises a means for sliding one part of the roll shaft longitudinally relative to another part of the roll shaft.

18. The roll according to claim 17 wherein the one part of the roll shaft has a connecting shaft receiving bore and the other part of the roll shaft as a connecting shaft slidably insertable into the bore.

19. The roll according to claim 1 further comprising an oil film interposed between the roll shaft and shell and wherein the roll shaft is rotationally fixed.

20. A rolling mill comprising a supporting structure, a plurality of rolls and each supported in the supporting structure by a pair of roll chocks, and wherein at least one roll comprises:

a generally cylindrical roll shaft;

a hollow generally cylindrical shell circumferentially surrounding at least a portion of the length of the roll shaft;

at least one pair of opposing mating surfaces interposed between the roll shaft and the shell and having contours with camming angles that continuously vary along the length of the roll shaft; and

means for translating one of the mating surfaces relative to the other one of the mating surfaces, whereby translation of one of the surfaces relative to the opposing surface varies the crown of the roll.

21. A rolling mill according to claim 20 wherein such a roll is longitudinally asymmetrical and further comprising a second roll similar to the first roll and arranged in the mill so that the asymmetry of the two rolls is equal and opposite.

22. A strip coating apparatus comprising a plurality of rolls for applying a coating to a strip of material wherein at least one roll comprises means for varying the external crown of the roll for adjusting the thickness of coating material applied to the strip transverse to its length.

23. A strip coating apparatus according to claim 22 wherein the variable crown roll comprises a coating applicator roll.

24. A strip coating apparatus according to claim 22 wherein the variable crown roll comprises a transfer roll between a coating pickup roll and a coating applicator roll.

25. A strip coating apparatus according to claim 22 wherein the means for adjusting the external crown of the roll comprises:

a generally cylindrical roll shaft;

a hollow generally cylindrical shell circumferentially surrounding at least a portion of the length of the roll shaft;

at least one pair of opposing mating surfaces interposed between the roll shaft and the shell and having contours with camming angles that continuously vary along the length of the roll shaft; and

means for translating one of the mating surfaces relative to the other one of the mating surfaces, whereby translation of one of the surfaces relative to the opposing surface varies the crown of the roll.

26. A crown control mechanism comprising:

a substantially unbendable member;

a plurality of bars extending transversely from the unbendable member and terminating with angled surfaces;

a plurality of bearing bars having angled surfaces at one end of each of the bars opposing and mating with the angled surfaces of the bars and engaging bearings at another end of each of the bars; and

a means for translating one of either the angled surfaces and the opposing angled surfaces relative to the other.

27. The mechanism according to claim 26 wherein the bars are backing bars attached to a sliding member which slides relative to the substantially unbendable member, and the translating means comprises a means for translating the sliding member.

28. The mechanism according to claim 26 wherein the bars comprise intermediate threaded bars and the mechanism further comprises threaded backing bars slidable against the substantially unbendable member, a threaded shaft interposed between threads of the intermediate threaded bars and threads of the threaded backing bars, and wherein the translating means comprises a means for rotating the threaded shaft.

29. The mechanism according to claim 28 wherein the threaded shaft comprises a right hand threaded half and a left hand threaded half.

30. The mechanism according to claim 26 wherein all the angles open toward an end of the mechanism.

31. A strip leveler including:

a substantially unbendable member;

at least two parallel work rolls spaced apart to pass a workpiece therebetween;

a least one backup roll contacting one of the work rolls or an intermediate roll and having large diameter sections with annular grooves in between the large diameter sections;

a plurality of bearings in the grooves;

a plurality of bearing bars engaging the bearings at one end of each of the bars and having angled surfaces at another end of each of the bars;

a plurality of bars having angled surfaces at one end of each of the bars opposing and mating with the angled surfaces of the bearing bars and interacting with the substantially unbendable member at another end of each of the bars so that the bars are prevented from movement away from the backup roll by the substantially unbendable member; and

a means for translating one of either the angled surfaces and the opposing angled surfaces relative to the other.

FIG. 1

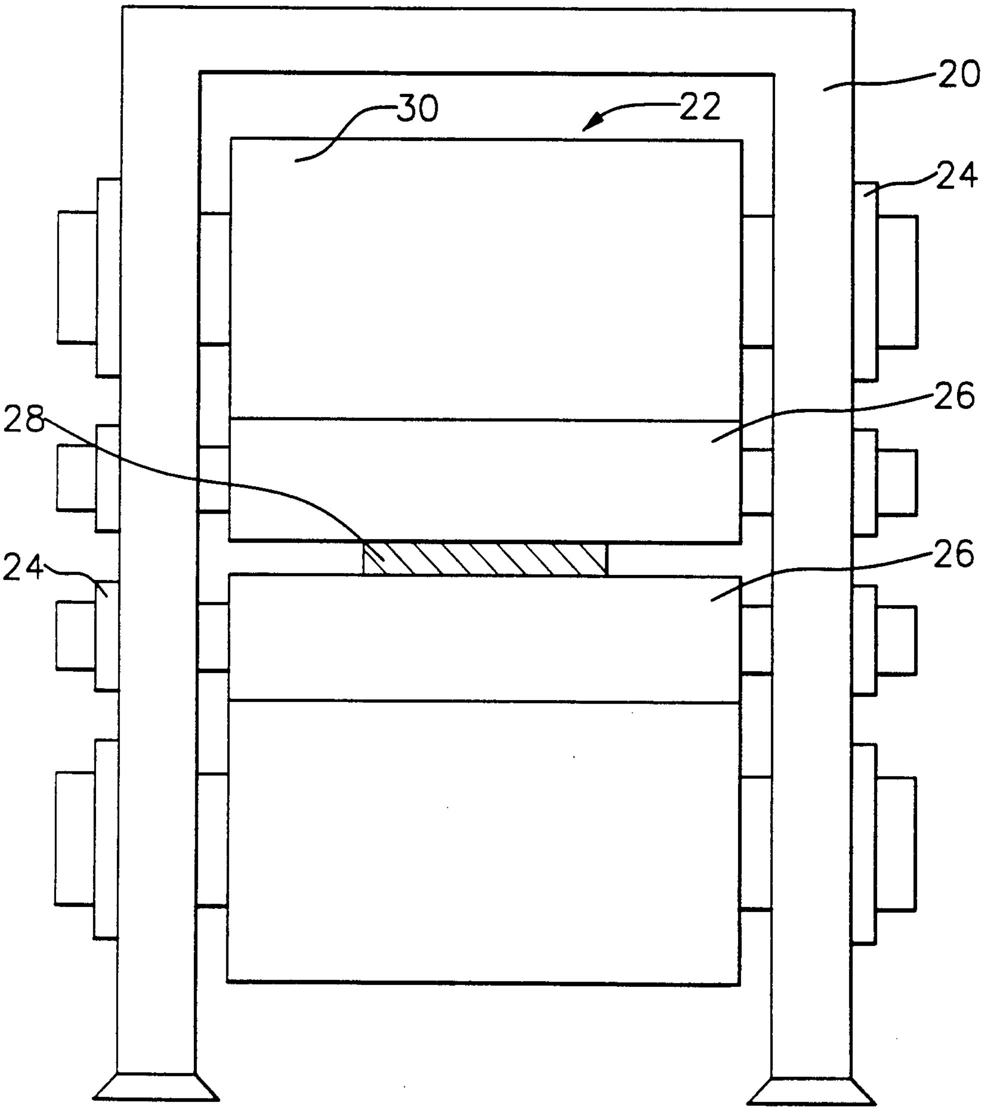

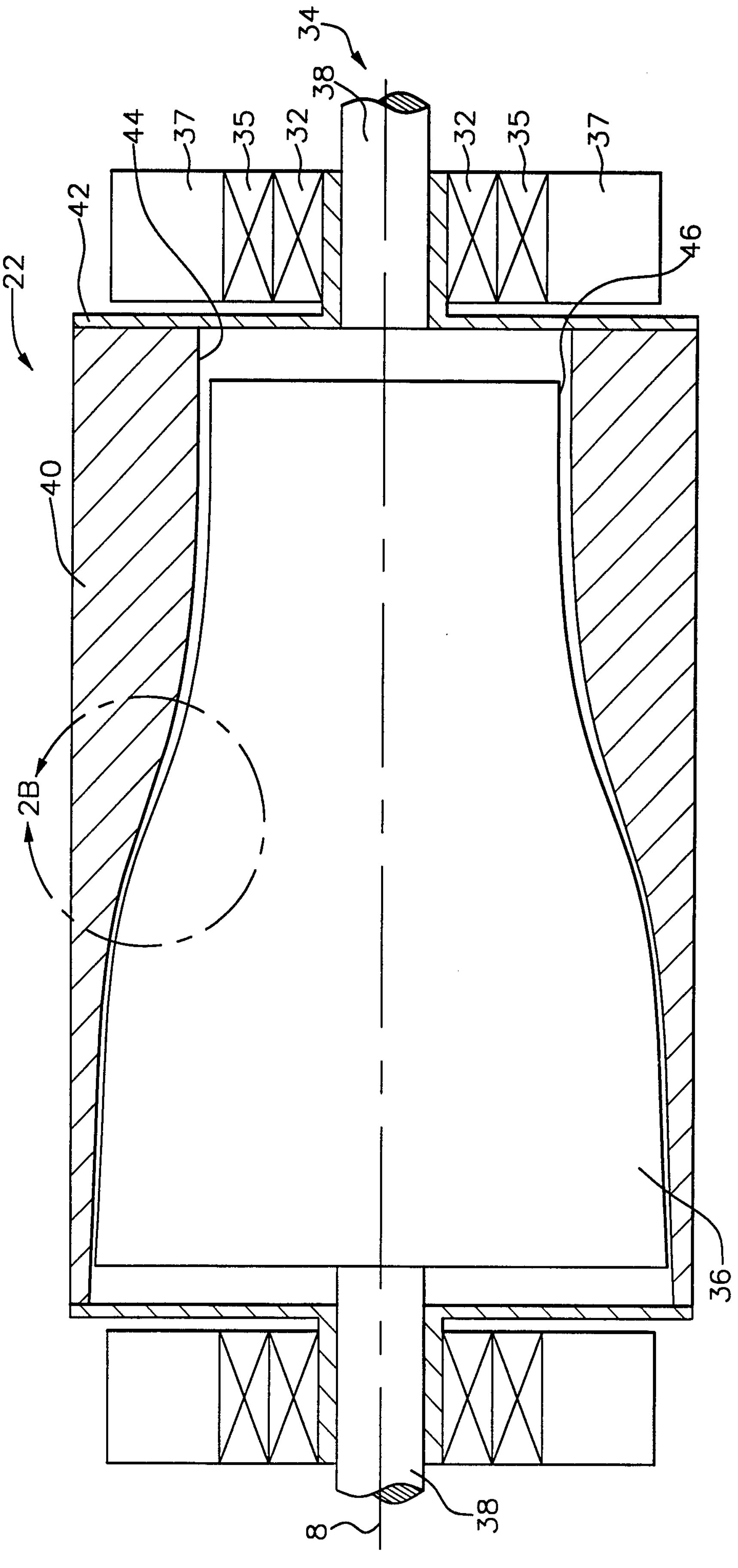

FIG.2A

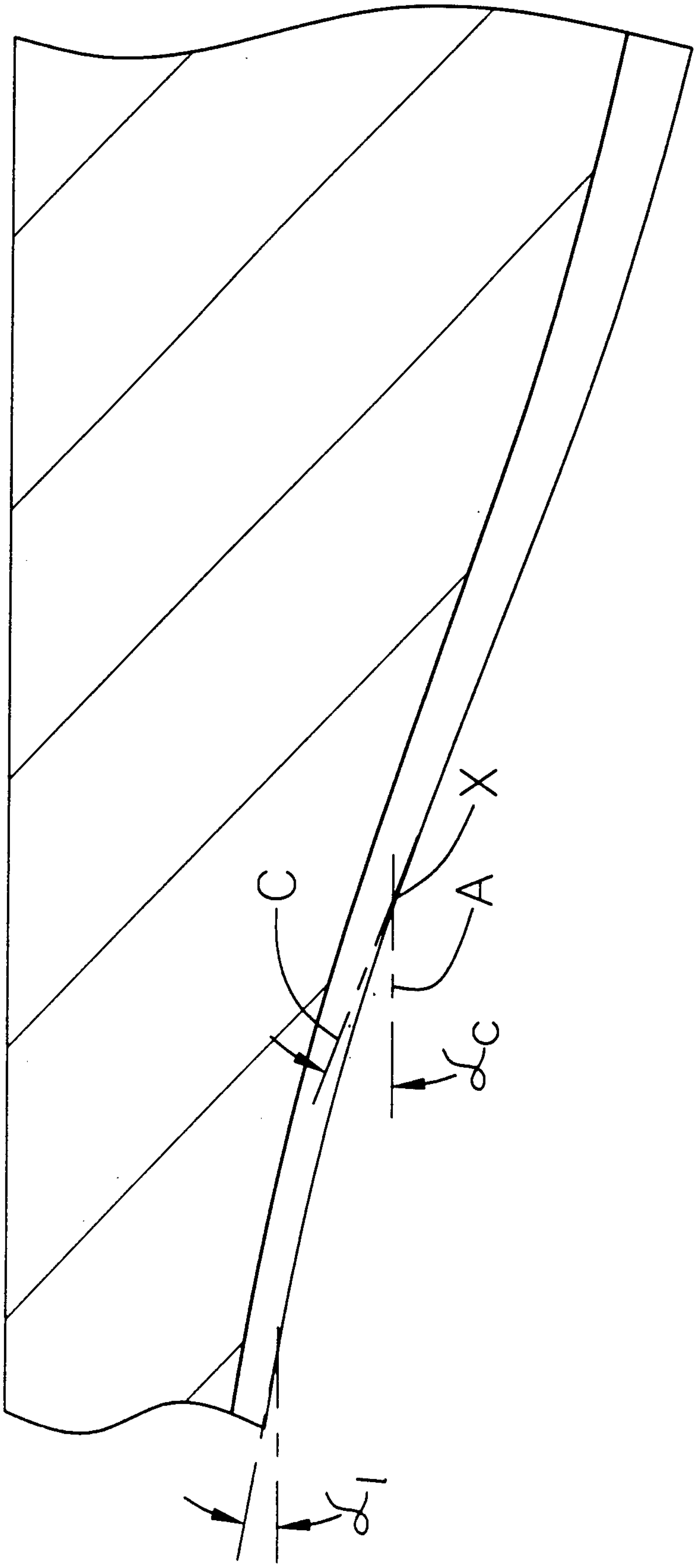

FIG.2B

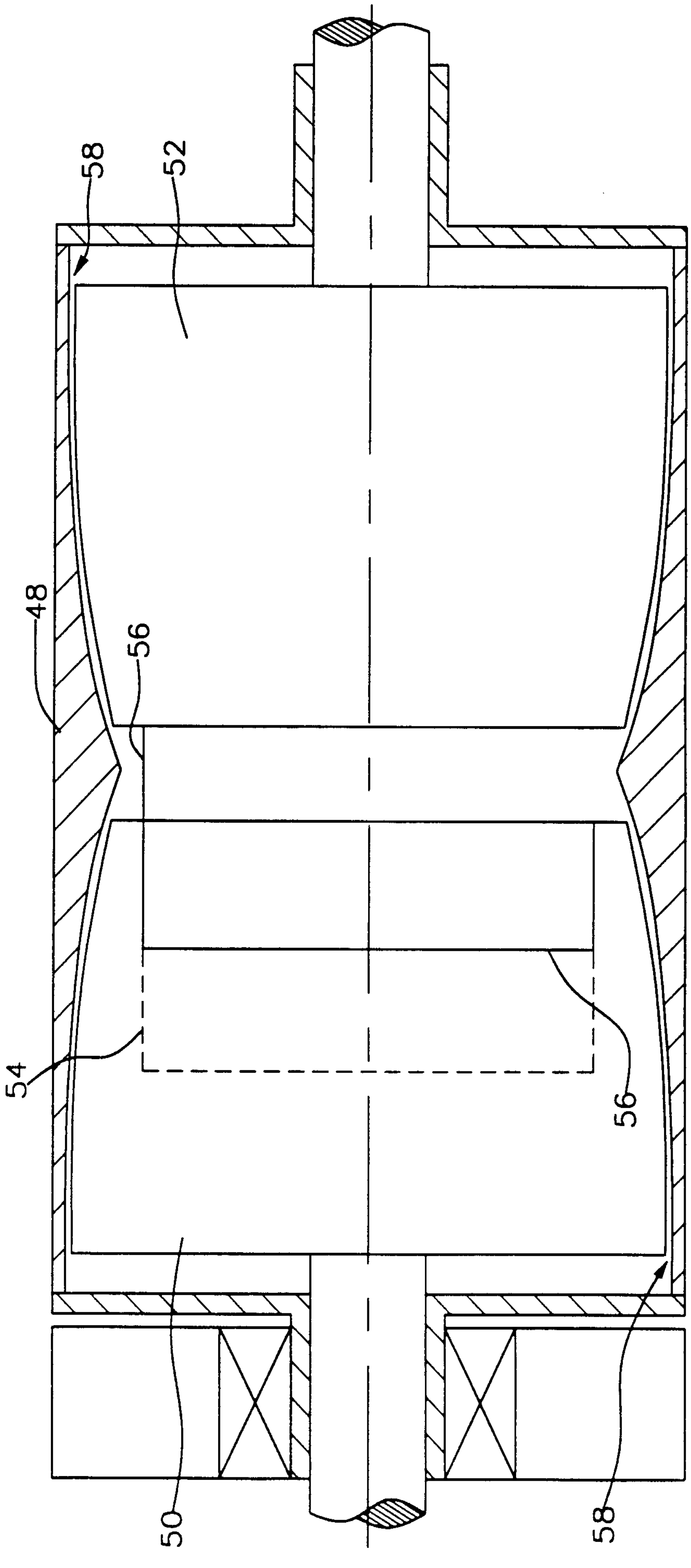

FIG.3

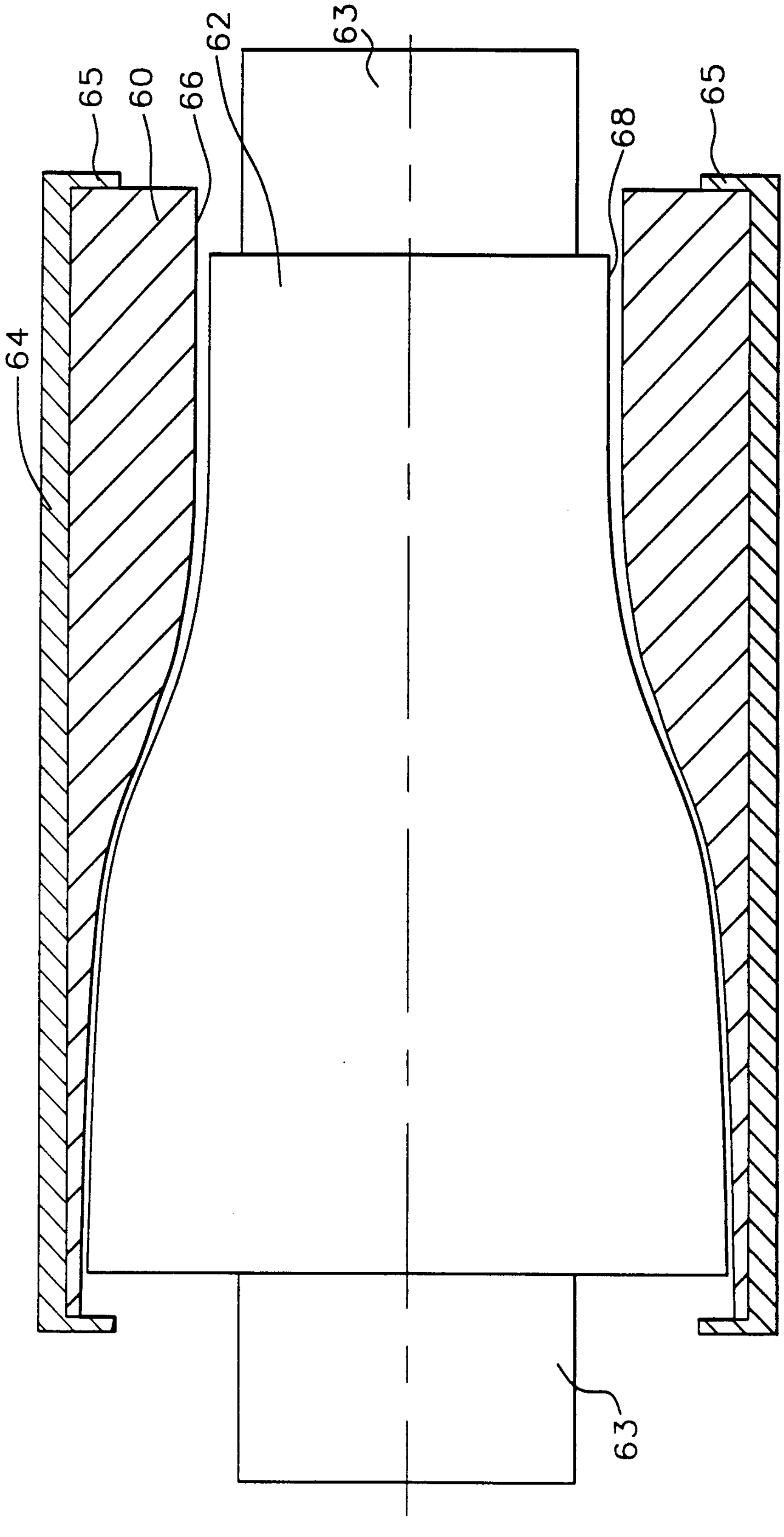

FIG. 4

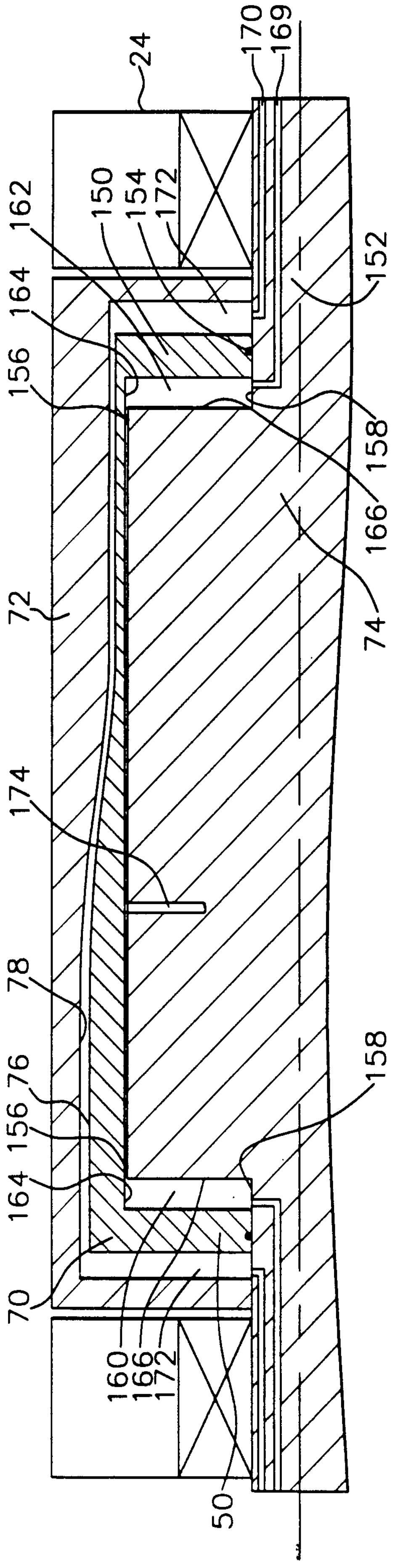
24
170
169
162
150
154
172
152
164
156
158
166
72
74
174
78
76
156
158
164
70
160
166
172
50

FIG.5

FIG. 6

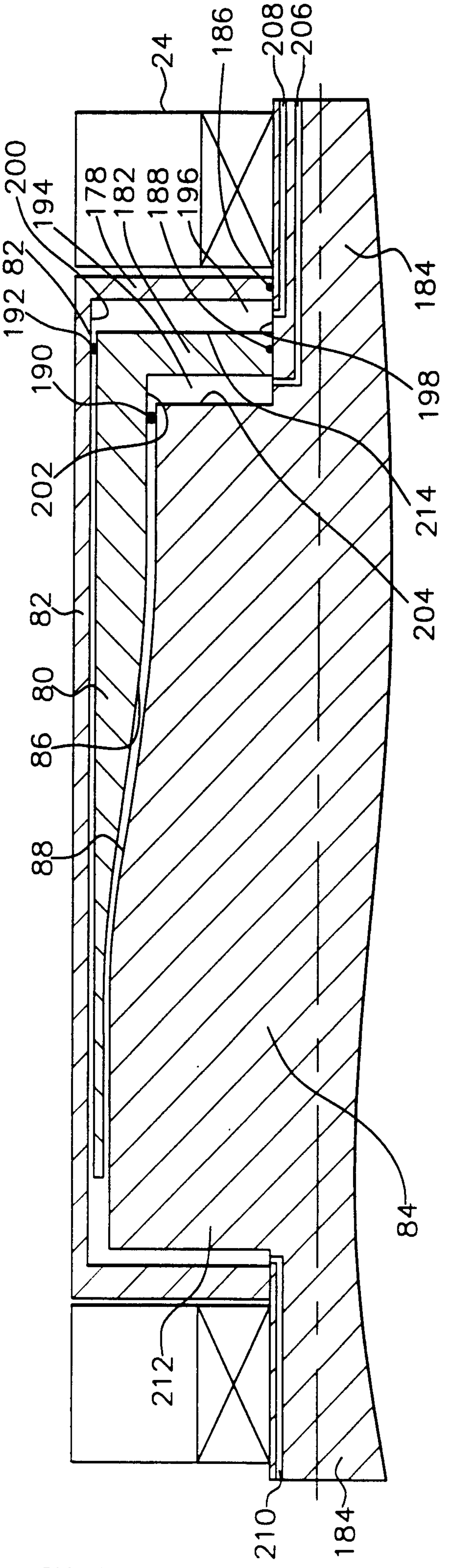
24
186
208
206
200
194
178
182
188
196
192
82
190
202
184
198
214
204
82
80
86
88
84
212
210
184

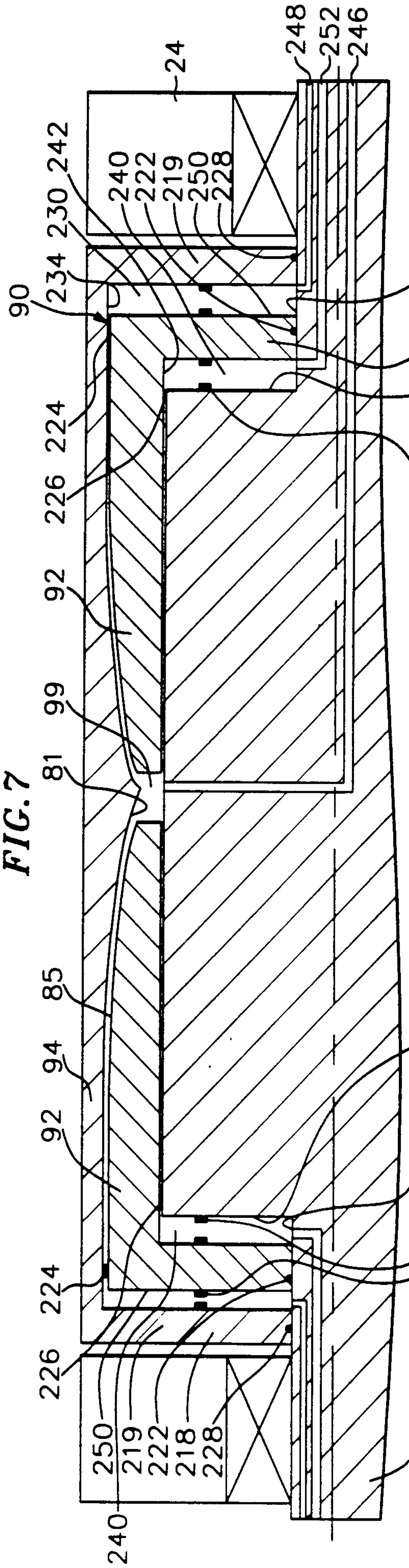
24
248
252
246
242
230
240
222
219
250
228
232
90
234
218
244
224
226
247
92
99
81
85
94
92
244
232
247
224
226
250
219
222
218
228
240
220

FIG. 7

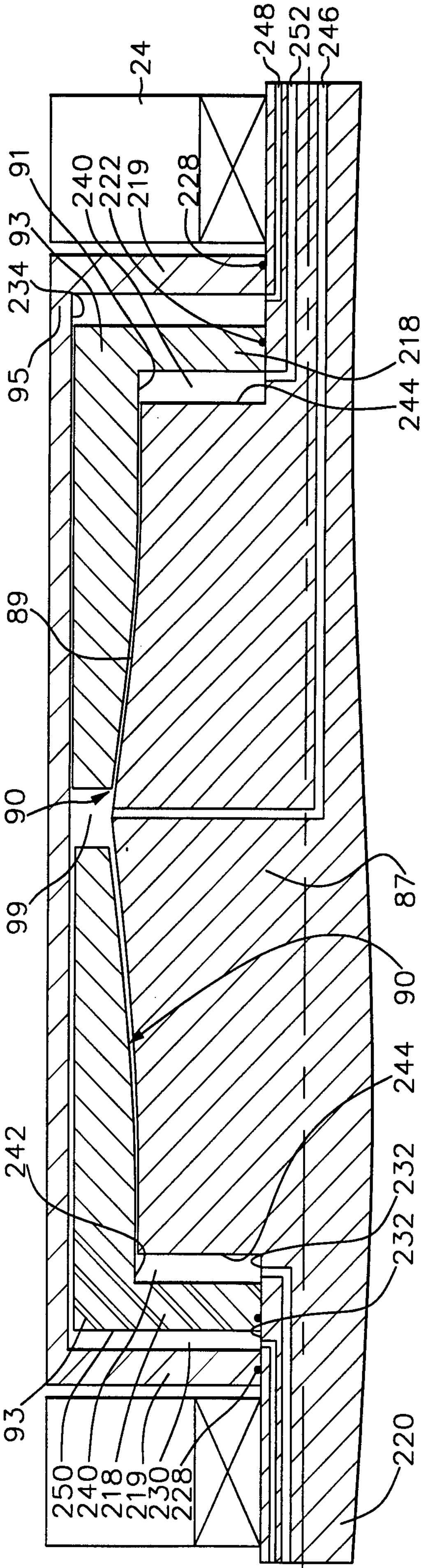
24
248
252
246
228
219
222
240
91
93
234
95
218
244
89
90
99
87
90
244
242
232
232
93
250
240
218
219
230
228
220

FIG.8

FIG.9

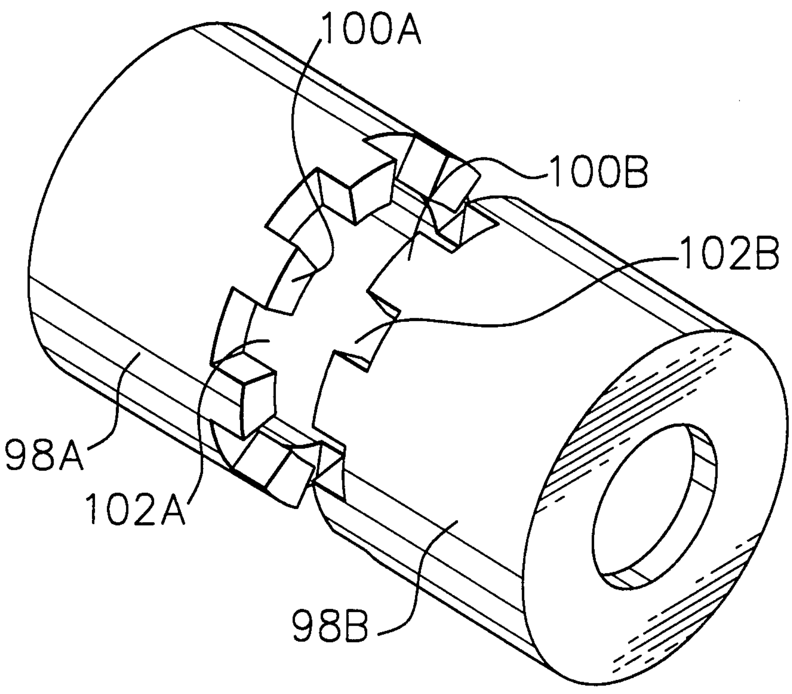

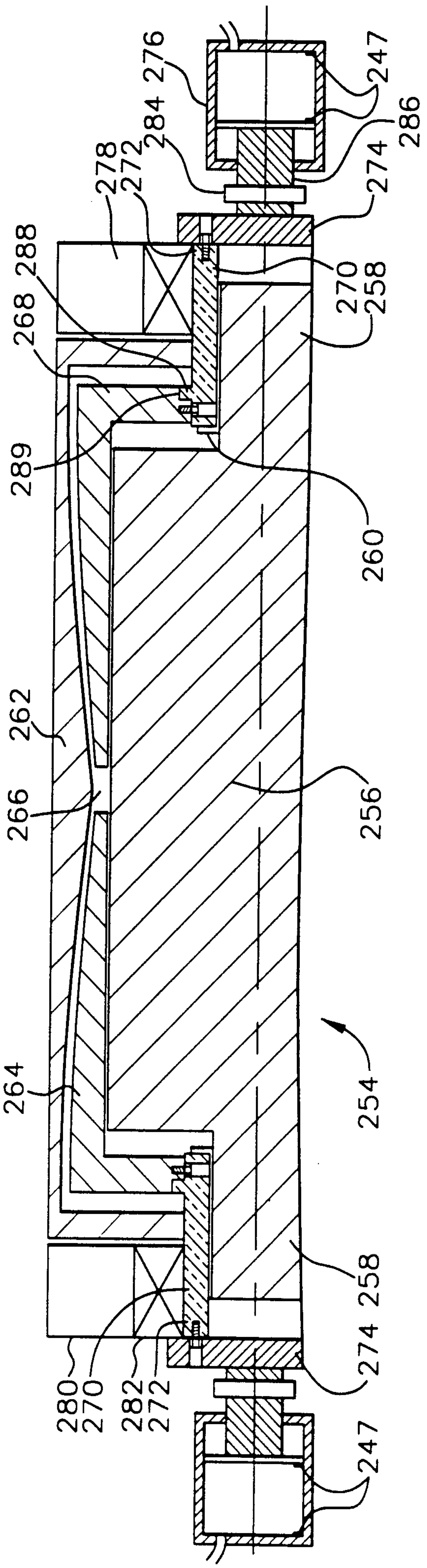
276
247
284
286
274
278
272
288
268
270
258
289
260
262
266
256
264
254
258
274
280
270
282
272
247

FIG.10

FIG. 11

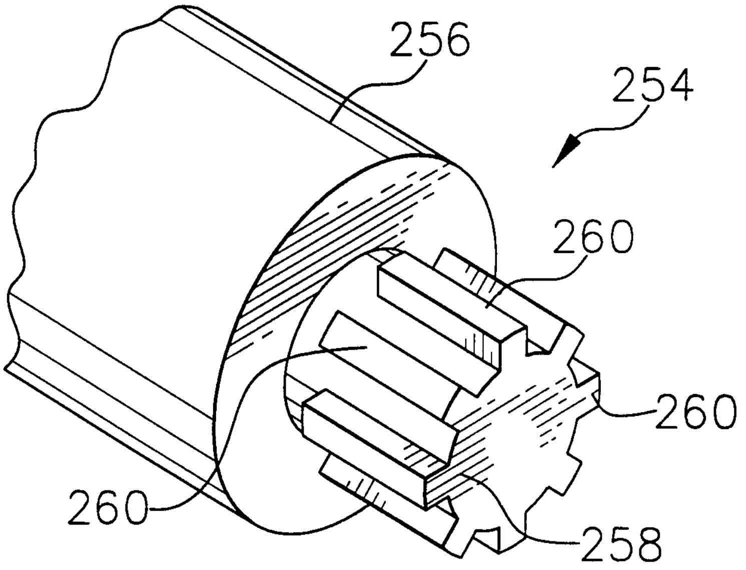

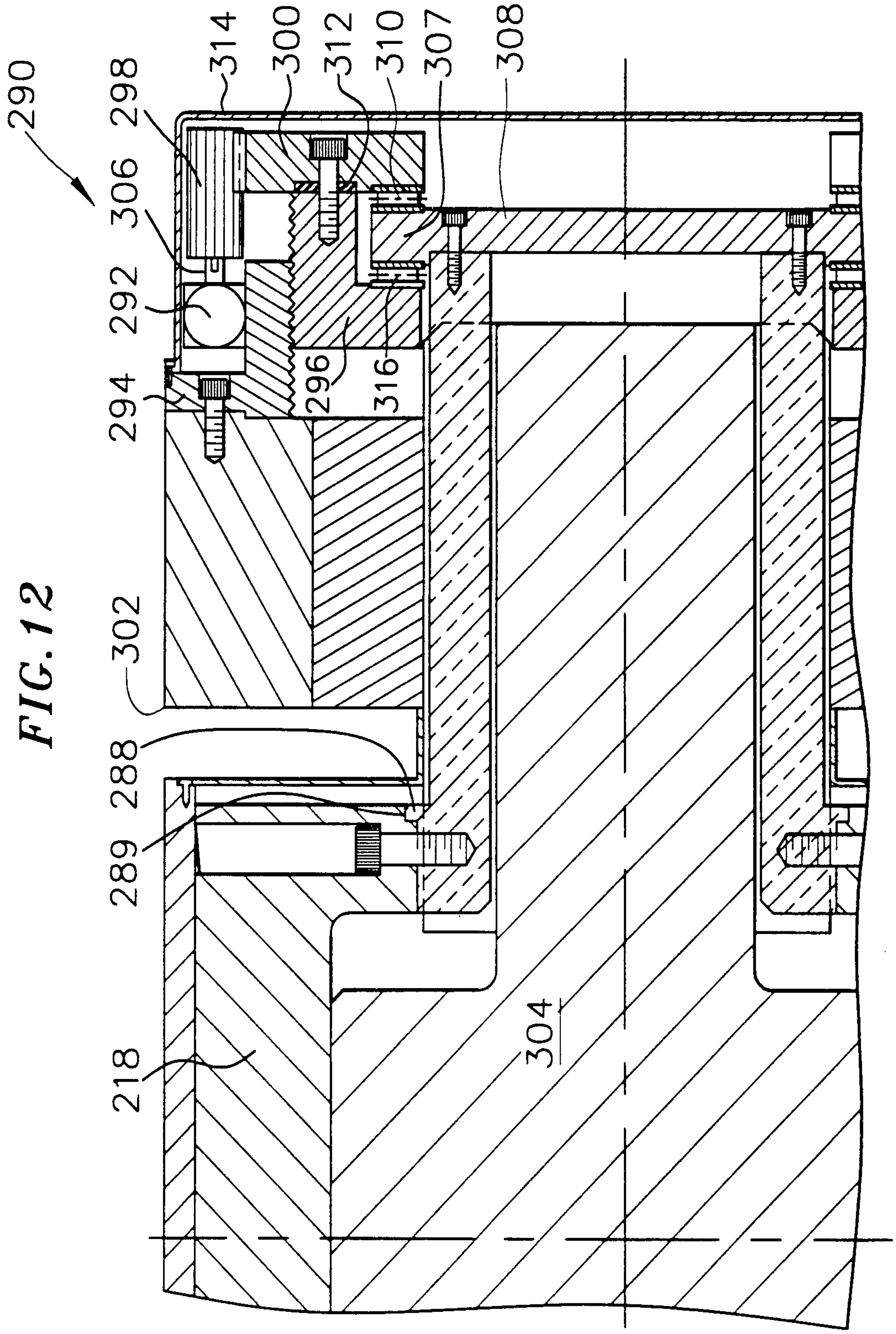
290
298
314
300
312
310
307
308
306
292
296
316
294
302
288
289
304
218

FIG.12

FIG.13

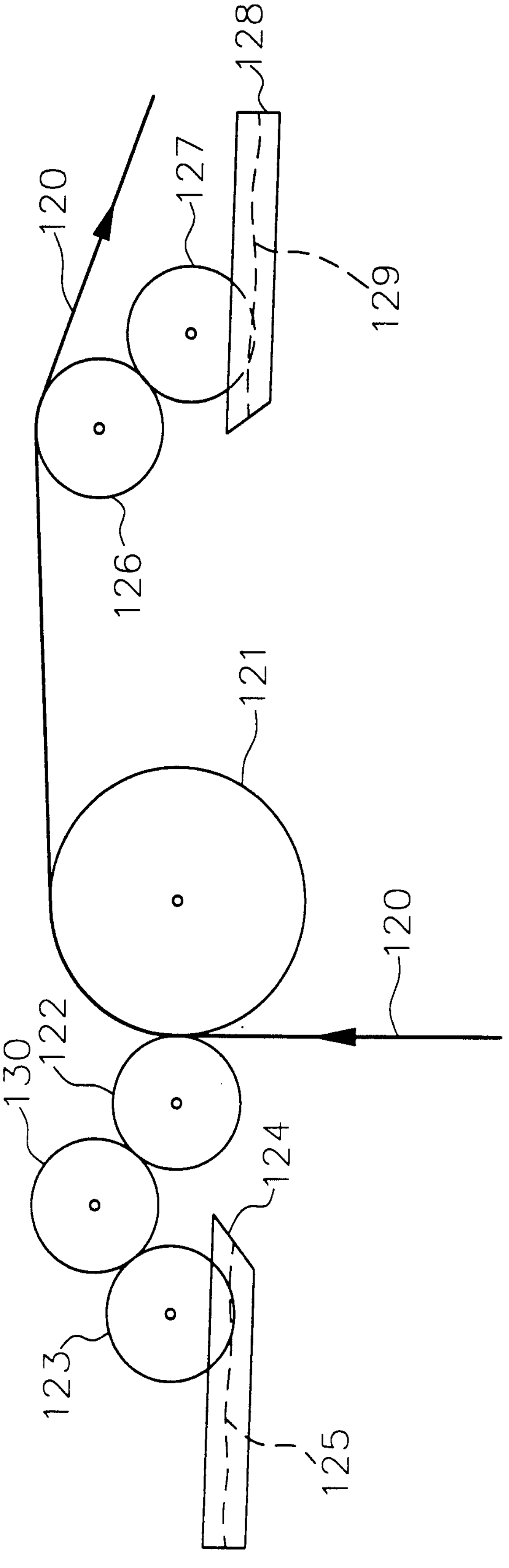

FIG. 14

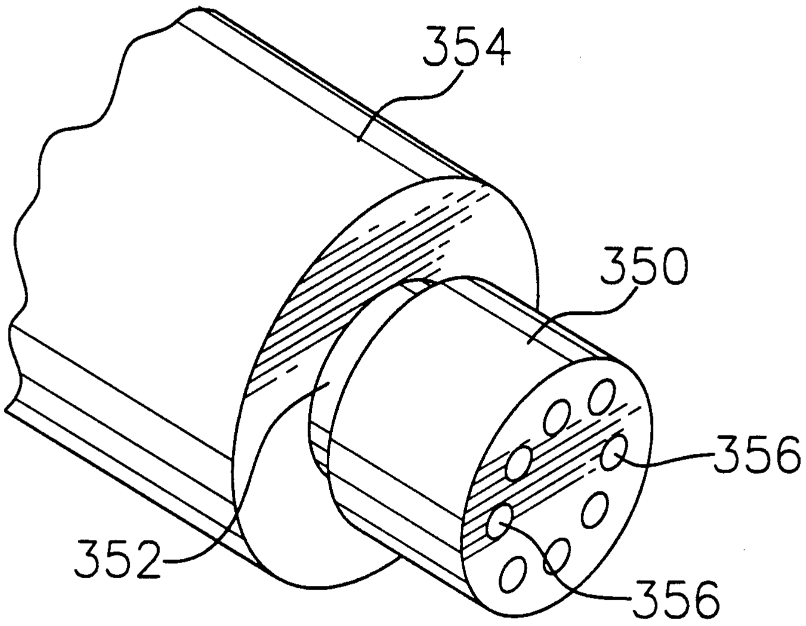

FIG. 15

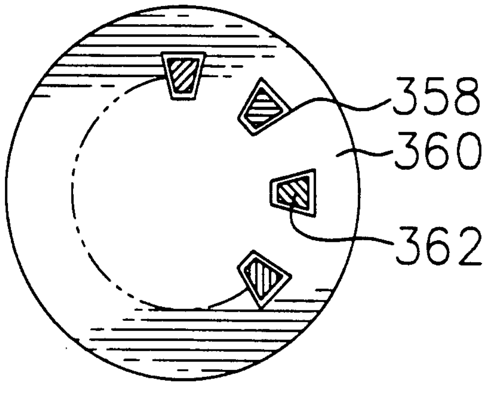

FIG. 16

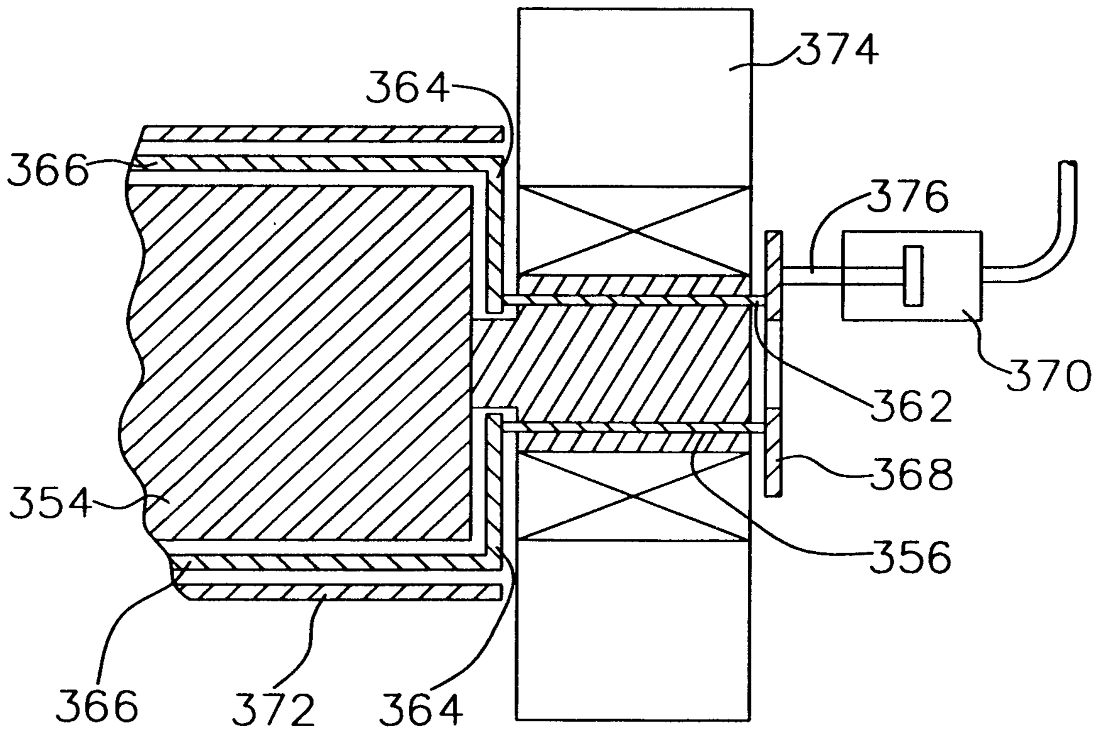

FIG. 17

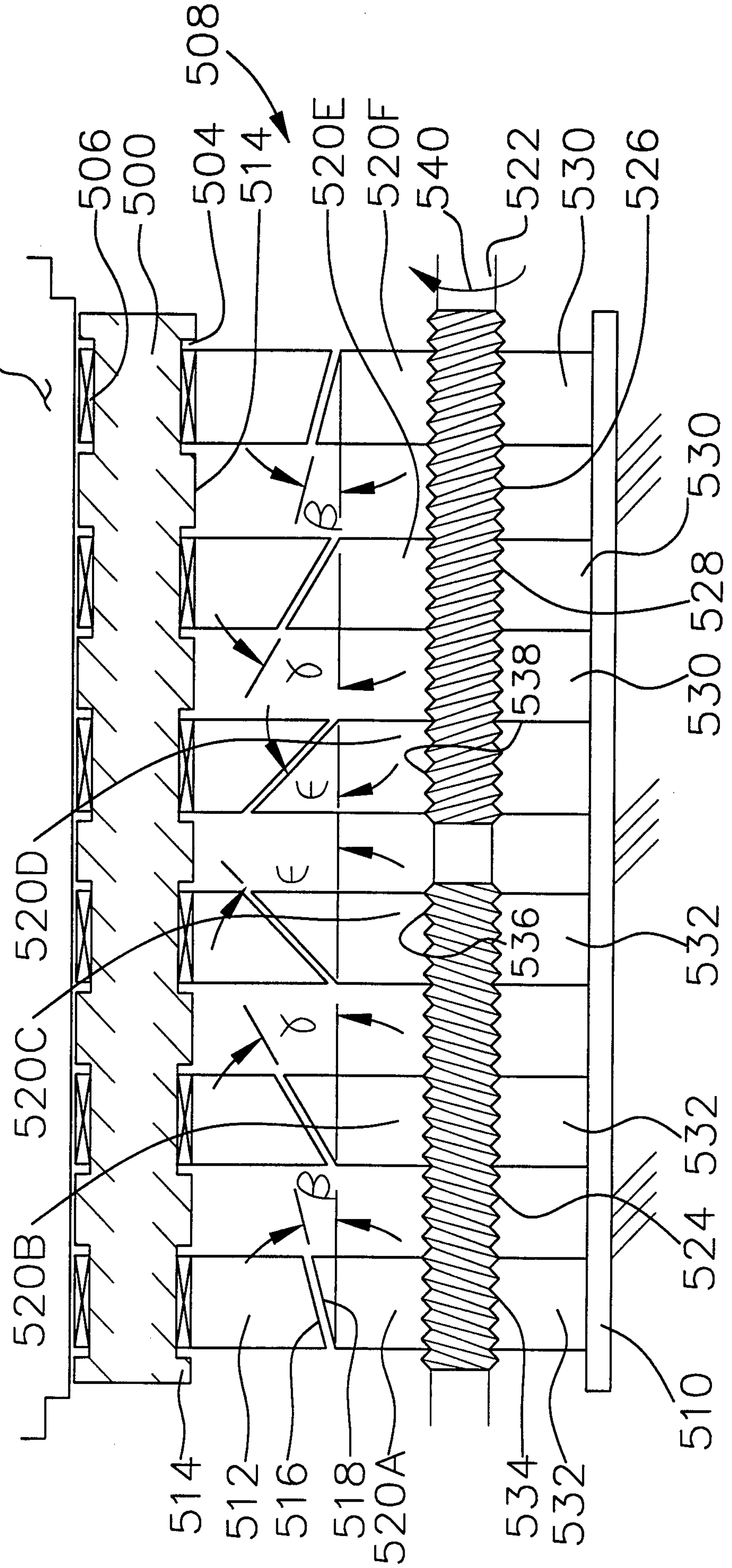
502
506
500
504
514
508
520E
520F
540
522
530
526
530
530
528
530
538
520D
520C
520B
536
532
532
524
510
514
512
516
518
520A
534
532
β
γ
ε
ε
γ
β

FIG. 18

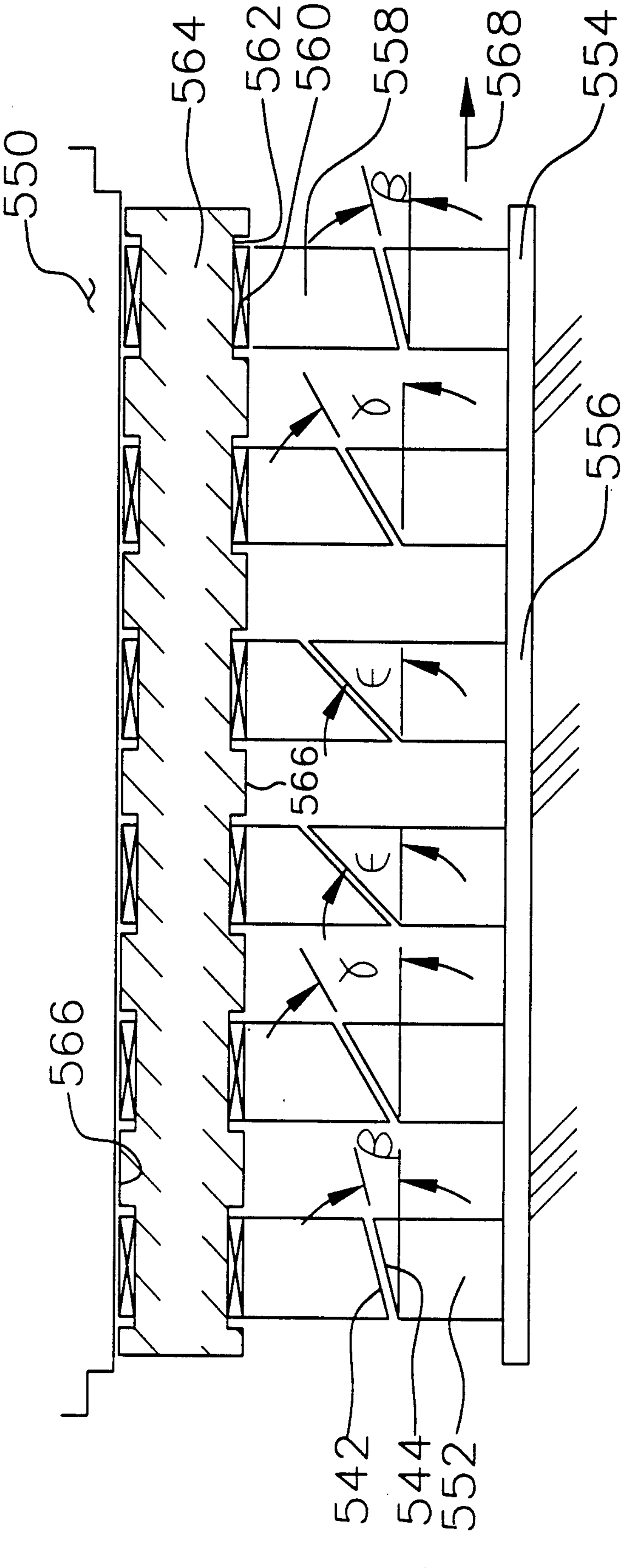

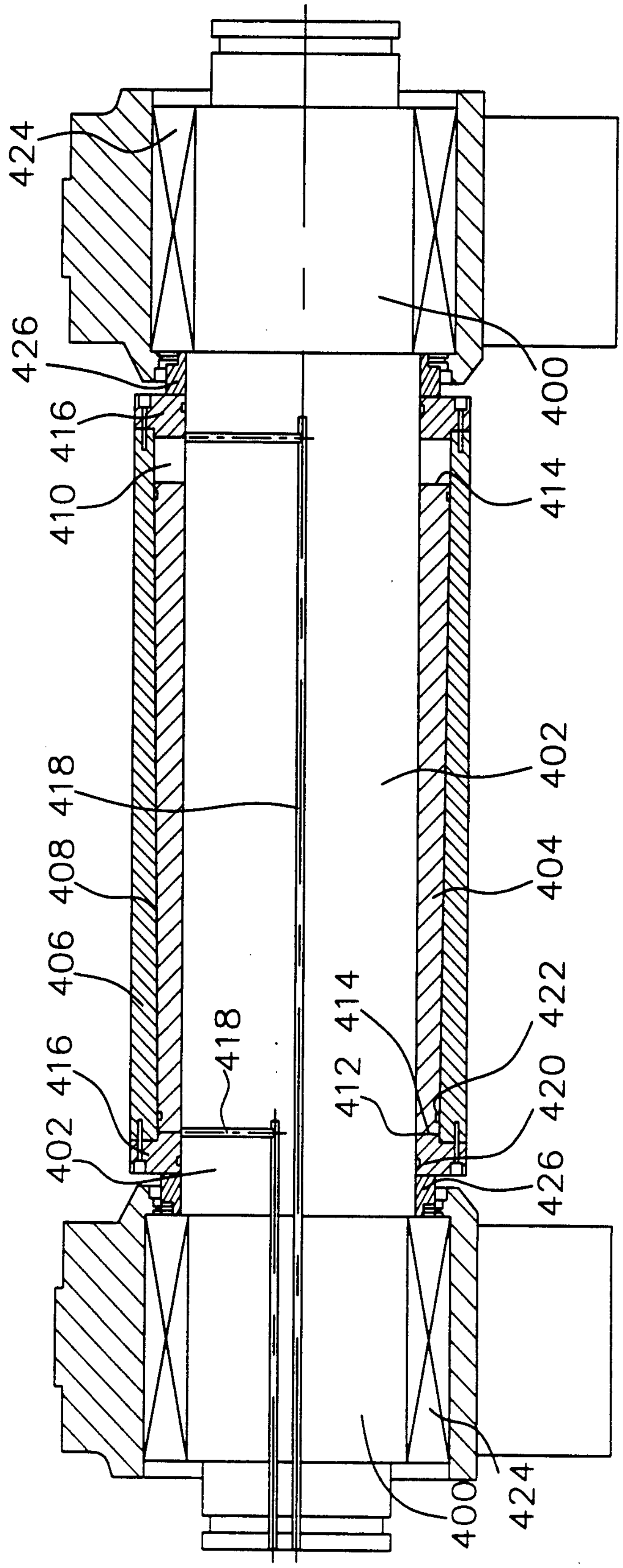
424
426
416
410
400
414
402
418
408
404
406
416
418
402
412
414
422
420
426
400
424

FIG. 19

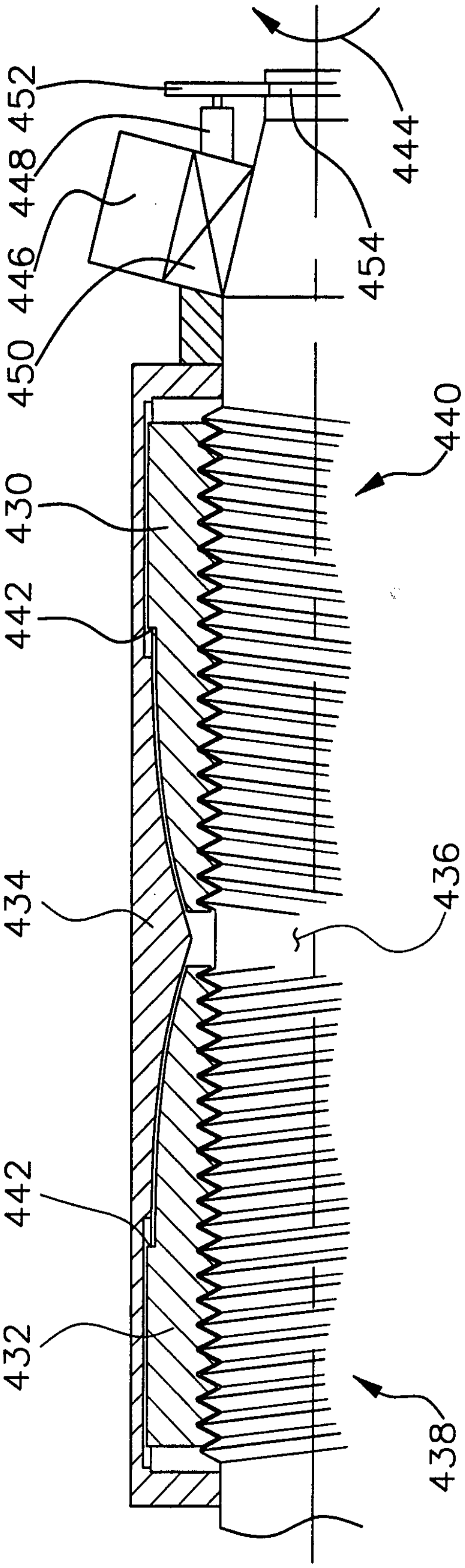

FIG.20

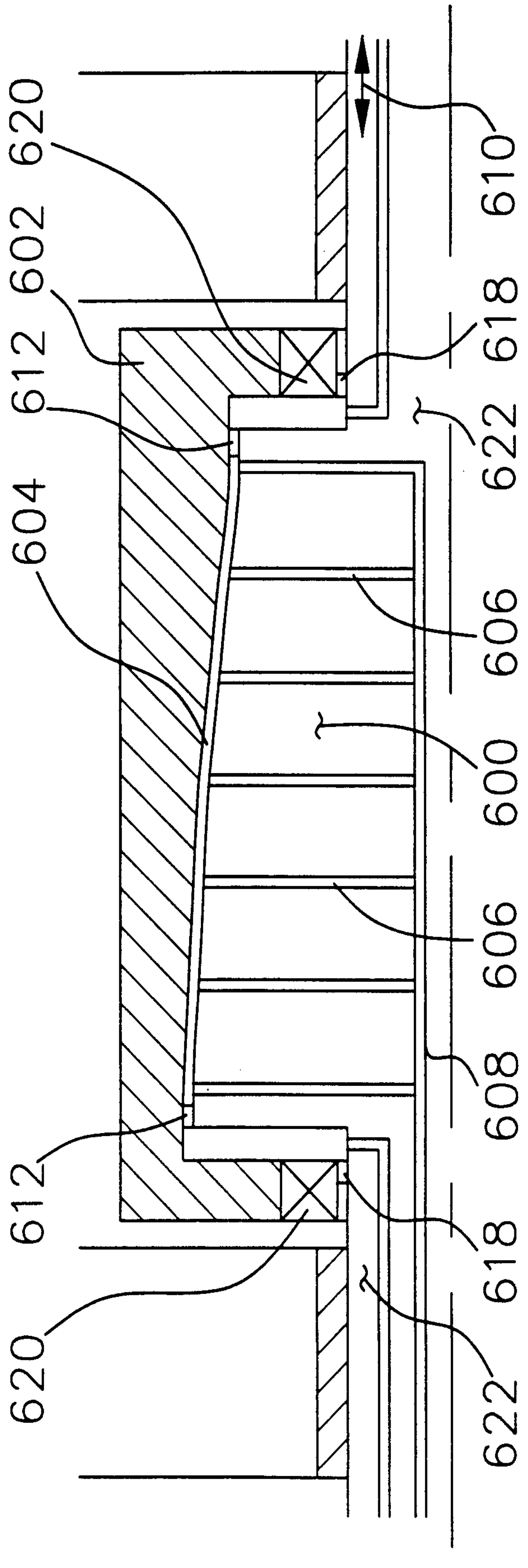

FIG. 21

INTERNATIONAL SEARCH REPORT

International application No.
PCT/US96/11339

A. CLASSIFICATION OF SUBJECT MATTER

IPC(6) :B21B 27/05
US CL :72/252.5; 492/1, 17, 21
According to International Patent Classification (IPC) or to both national classification and IPC

B. FIELDS SEARCHED

Minimum documentation searched (classification system followed by classification symbols)

U.S. : 72/160, 161, 241.2, 241.4, 243.6, 244, 245, 247, 252.5; 492/1, 2, 6, 7, 17, 21

Documentation searched other than minimum documentation to the extent that such documents are included in the fields searched

Electronic data base consulted during the international search (name of data base and, where practicable, search terms used)

APS

C. DOCUMENTS CONSIDERED TO BE RELEVANT

Category*	Citation of document, with indication, where appropriate, of the relevant passages	Relevant to claim No.
X	US, A, 4,599,770 (KATO ET AL.) 15 July 1986, entire document.	1, 11
Y		2-4, 6-10, 12-16, 19-21
A		5, 17, 18
A	US, A, 5,413,806 (BRAUN), 06 MAY 1995, Figure 1, col. 2, lines 59-66.	22-25
A	US, A, 4,528,830 (MASUI ET AL.) 16 July 1985, Figures 2, 13-17.	26-31
A	US, A, 4,423,541 (MARSHALL) 03 January 1984, abstract, Figure 1b.	1-21

☒ Further documents are listed in the continuation of Box C. ☐ See patent family annex.

* Special categories of cited documents:

"A" document defining the general state of the art which is not considered to be of particular relevance

"E" earlier document published on or after the international filing date

"L" document which may throw doubts on priority claim(s) or which is cited to establish the publication date of another citation or other special reason (as specified)

"O" document referring to an oral disclosure, use, exhibition or other means

"P" document published prior to the international filing date but later than the priority date claimed

"T" later document published after the international filing date or priority date and not in conflict with the application but cited to understand the principle or theory underlying the invention

"X" document of particular relevance; the claimed invention cannot be considered novel or cannot be considered to involve an inventive step when the document is taken alone

"Y" document of particular relevance; the claimed invention cannot be considered to involve an inventive step when the document is combined with one or more other such documents, such combination being obvious to a person skilled in the art

"&" document member of the same patent family

Date of the actual completion of the international search 30 SEPTEMBER 1996	Date of mailing of the international search report 24 OCT 1996
Name and mailing address of the ISA/US Commissioner of Patents and Trademarks Box PCT Washington, D.C. 20231 Facsimile No. (703) 305-3230	Authorized officer For THOMAS C. SCHOEFFLER Sheila Veney Paralegal Specialist Group 3200 Telephone No. (703) 308-1148

INTERNATIONAL SEARCH REPORT

International application No.
PCT/US96/11339

C (Continuation). DOCUMENTS CONSIDERED TO BE RELEVANT

Category*	Citation of document, with indication, where appropriate, of the relevant passages	Relevant to claim No.
A	US, A, 4,837,906 (MORI ET AL.) 13 June 1989, abstract, Figure 3.	1-21