E. S. LIDSTONE.

VISE.

APPLICATION FILED JAN. 18, 1921.

1,385,216. **Patented July 19, 1921.**

Fig. 1,

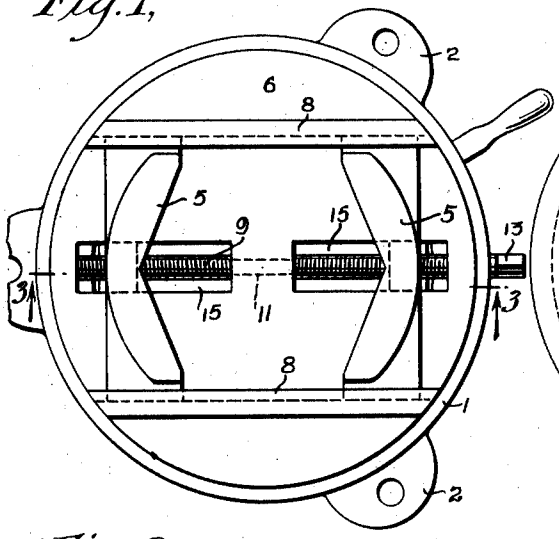

Fig. 4,

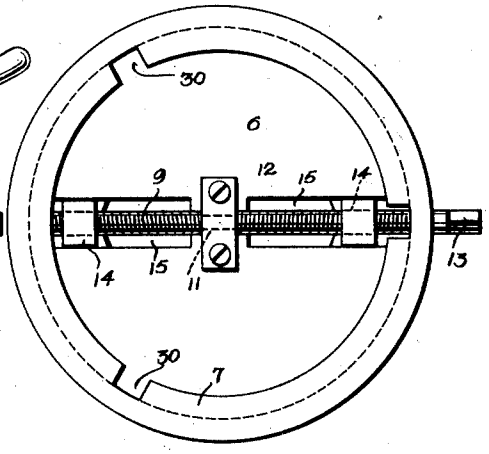

Fig. 2,

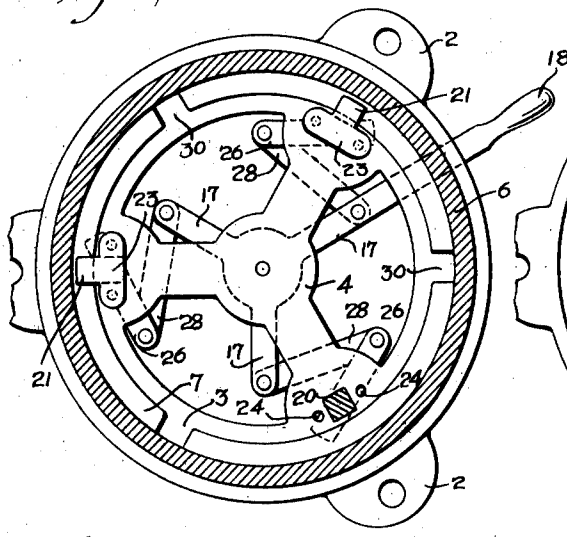

Fig. 5,

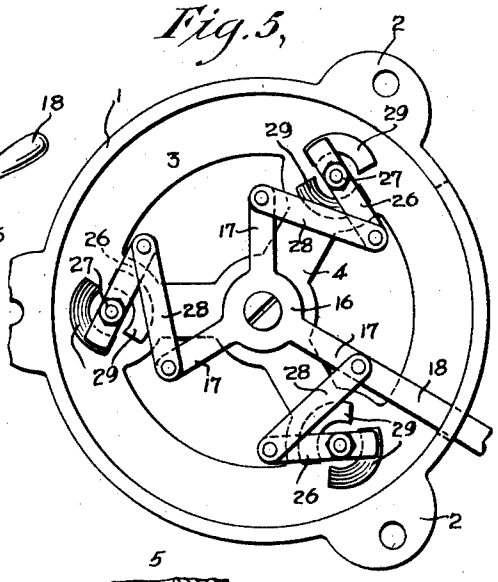

Fig. 3,

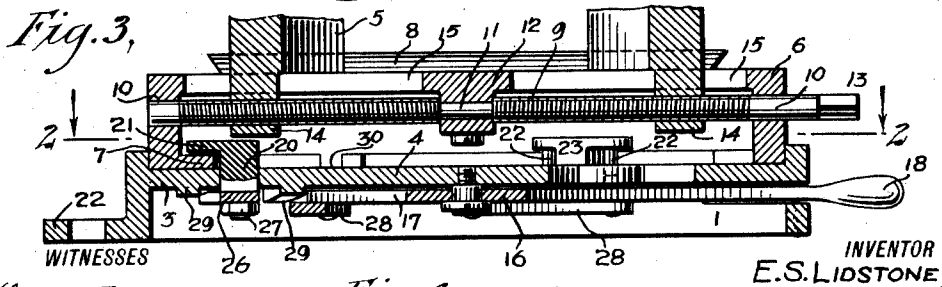

Fig. 6.

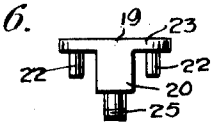

WITNESSES

Edw. Thorpe

F. J. Foster

INVENTOR

E. S. LIDSTONE

BY Munn & Co.

ATTORNEYS

UNITED STATES PATENT OFFICE.

EDWARD S. LIDSTONE, OF PROVIDENCE, RHODE ISLAND.

VISE.

1,385,216. Specification of Letters Patent. Patented July 19, 1921.

Application filed January 18, 1921. Serial No. 438,154.

To all whom it may concern:

Be it known that I, EDWARD S. LIDSTONE, a citizen of the United States, and a resident of Providence, in the county of Providence and State of Rhode Island, have invented a new and Improved Vise, of which the following is a full, clear, and exact description.

This invention relates to improvements in vises, an object of the invention being to provide a device of this character having rotary mounting upon a support and to provide improved means associated with the support for selectively preventing or permitting such rotary movement so that the work may be rotated without removing it from the jaws of the device.

A further object is to provide a vise and a support therefor which will permit ready removal of the vise from the support without disturbing the work in the vise.

A still further object is to provide a device of the character stated which will be simple and practical in construction, strong and durable in use and one which will be unlikely to get out of order.

With these and other objects in view, the invention consists in certain novel features of construction and combinations and arrangements of parts as will be more fully hereinafter described and set forth in the claims.

In the accompanying drawing:

Figure 1 is a top plan view of the vise;

Fig. 2 is a view in section therethrough on the line 2—2 of Fig. 3;

Fig. 3 is an enlarged view in section on the line 3—3 of Fig. 1;

Fig. 4 is a bottom plan view of the member 6 and its associated parts;

Fig. 5 is a bottom plan view of the base;

Fig. 6 is an enlarged view in elevation of one of the clamping members 19.

Referring in detail to the drawings, 1 represents a supporting base which is preferably in the form of a ring and which is provided at its outer edge with outwardly extending perforated lugs or ears 2 adapted to receive securing devices for permanently securing the base to a table top. The base is provided with an internal annular web 3 adjacent its upper end and a centrally disposed spider 4 is integral with the web 3.

The jaws 5 of the vise are supported upon an annular member 6 which fits within the base 1 and includes an internal annular flange 7 around its lower edge resting on the web 3.

Upon the upper face of the member 6, parallel beveled guide strips 8 are provided having opposed grooves therein to receive tenons on the vise jaws.

A screw 9 is journaled adjacent each end in the side walls of the member 6, as shown at 10, and has a reduced central portion 11 which turns freely in a bearing sleeve 12 depending from the center of the member 6. The screw is provided at one end with an angular extension 13 which receives any suitable tool for turning the screw. Threaded collars 14 on the jaws extend downwardly through slots 15 in the upper face of the member 6 and engage the screw 9. The screw 9 is oppositely threaded on each side of the central bearing sleeve 12 so that turning movement of the screw operates the jaws simultaneously in opposite directions, as will be readily understood. I have illustrated a pair of angular jaws in position in the vise, but it will be apparent that the shape of the jaws will depend entirely upon the nature of the work to be handled and that various forms of jaws may be substituted for the ones illustrated.

It will have been apparent from the foregoing description that some means must be provided for locking the member 6 against rotary movement on the base 1 and also against vertical movement relative to the base.

With this end in view, I rotatably mount a plate 16 on the under face of the spider 4 at its central portion. The plate 16 is integral with a plurality of radially disposed levers 17. I preferably employ three levers, but a greater or less number may be used if deemed advisable. One of the levers 17 is extended to form an operating handle 18 movable through an arcuate slot provided in the base 1 under the web 3.

Clamping members 19 movable vertically through the web 3 include square shanks 20 movable through square openings in the web, lugs 21 at the upper ends of the shanks projecting over the flange 7 and depending guide pins 22 are carried by the heads 23 of the clamping members and movable through slots 24 in the web 3. The square shanks 20 terminate at their lower ends in

threaded posts 25 which are pivotally connected to the intermediate portions of links 26 by screwing nuts 27 onto the ends of the posts and confining the links between the nuts and the angular shanks 20 of the clamping members.

Links 28 are pivotally connected at one end to the ends of the links 26 and at their other ends to the levers 17.

On the under face of the web 3, the clamping members 19 are nearly encircled by pairs of oppositely disposed arcuate cam members 29 beveled in opposite directions so that the links 26 which are pivoted to the posts 25 between the cam members will be either raised or lowered by the co-acting cam faces when moved about their pivotal points. When the links are lowered, they will pull the clamping members 19 downwardly through the web, causing the lugs 21 to frictionally engage the flange 7 and prevent movement of the annular member 6 relative to the base 1.

It will thus be seen that by moving the handle 18, the levers 17 will operate through the links 26 and 28 to move the clamping members 19 vertically through the web 3 and clamp the member 6 against the base. To permit rotary movement of the member 6, the lever is again moved to the opposite end of the slot and the parts will be in the position illustrated.

If it is desired to lift the member 6 off of the base, it is merely necessary to rotate this member until recesses 30 provided in the flange 7 register with the lugs 21. The member 6 may then be readily removed from the base.

I have illustrated one of the preferred embodiments of the invention, but it will be apparent that various slight changes or alterations might be made in the general form of the parts described without departing from my invention and, hence, I do not wish to limit myself to the precise details set forth but shall consider myself at liberty to make such slight changes and alterations as fairly fall within the spirit and scope of the appended claims.

I claim:

1. A device of the character stated including a supporting base, an annular member having rotary mounting on the base, said annular member including an internal annular flange, a plurality of vertically movable members frictionally engageable with the flange to hold the annular member against rotary movement.

2. A device of the character stated including a supporting base, an annular member having rotary mounting on the base, said annular member including an internal annular flange, a plurality of vertically movable members frictionally engageable with the flange to hold the annular member against rotary movement, and means carried by the base for simultaneously actuating all of said vertically movable members.

3. A device of the character stated comprising a supporting base, a member having rotary mounting on the base, adjustable jaws carried by said member, means for locking said member against rotation on the base, said means including vertically movable clamping members adapted to clamp said first mentioned member against the base, links pivoted adjacent their central portions to said clamping members, and pairs of oppositely disposed arcuate cam faces associated with the links whereby pivotal movement of the links causes vertical movement of the clamping members.

4. A device of the character stated, including a base ring, an internal annular web in the base ring, an annular member fitting within the base ring and rotatable thereon, an internal annular flange around the lower edge of said member resting on the web, and clamping devices movable vertically through the web and engageable with the flange to clamp the annular member against rotary movement on the base ring.

5. A device of the character set forth in claim 4 and in which the flange is provided with recesses adapted to register with the clamping members to permit the removal of the annular member from the base ring.

6. The combination with a suitable support, of an annular member rotatable upon said support, said member including a depending side portion and an internal annular flange around the lower edge of said portion, a screw journaled in the said side portion, said annular member having slots therein, co-acting jaws, collars on the jaws depending through the slots and engageable with the screw, parallel guide bars on the upper face of the annular member guiding the movement of the jaws, and means associated with the support and engageable with the flange for clamping said annular member against rotation.

7. A device of the character set forth in claim 6 and in which the screw includes a reduced central portion and is oppositely threaded on each side of the central portion and in which said annular member includes a centrally disposed depending bearing sleeve encircling the reduced portion of the screw.

8. In a device of the character stated, a base ring, an internal annular web in the base ring, a centrally disposed spider integral with the web, an annular member fitting within the ring, jaws carried by the member and movable simultaneously in opposite directions, an internal annular flange around the member resting on the web, a plate pivoted on the under face of the spider, radially disposed levers integral with the

plate, clamping devices movable vertically through the web and engageable with the flange, links pivoted to the clamping devices, links pivoted to said first mentioned links and to said levers, and means whereby rotary movement of the plate moves the clamping members vertically.

9. In a device of the character stated, a base ring, an internal annular web in the base ring, a centrally disposed spider integral with the web, an annular member fitting within the ring, jaws carried by the member and movable simultaneously in opposite directions, an internal annular flange around the member resting on the web, a plate pivoted on the under face of the spider, radially disposed levers integral with the plate, clamping devices movable vertically through the web and engageable with the flange, links pivoted to the clamping devices, links pivoted to said first mentioned links and to said levers, and means whereby rotary movement of the plate moves the clamping members vertically, said means comprising oppositely disposed arcuate cam faces associated with said first mentioned links and including oppositely beveled cam faces.

10. A device of the character set forth in claim 8, in which the base ring is formed with an arcuate slot therein and one of said levers is elongated, forming a handle movable through said slot.

EDWARD S. LIDSTONE.