June 6, 1950 J. LA CROSS 2,510,701

APPARATUS FOR CLEANING AND FLUSHING AUTOMOBILE RADIATORS AND THE LIKE

Filed Jan. 6, 1948 2 Sheets-Sheet 1

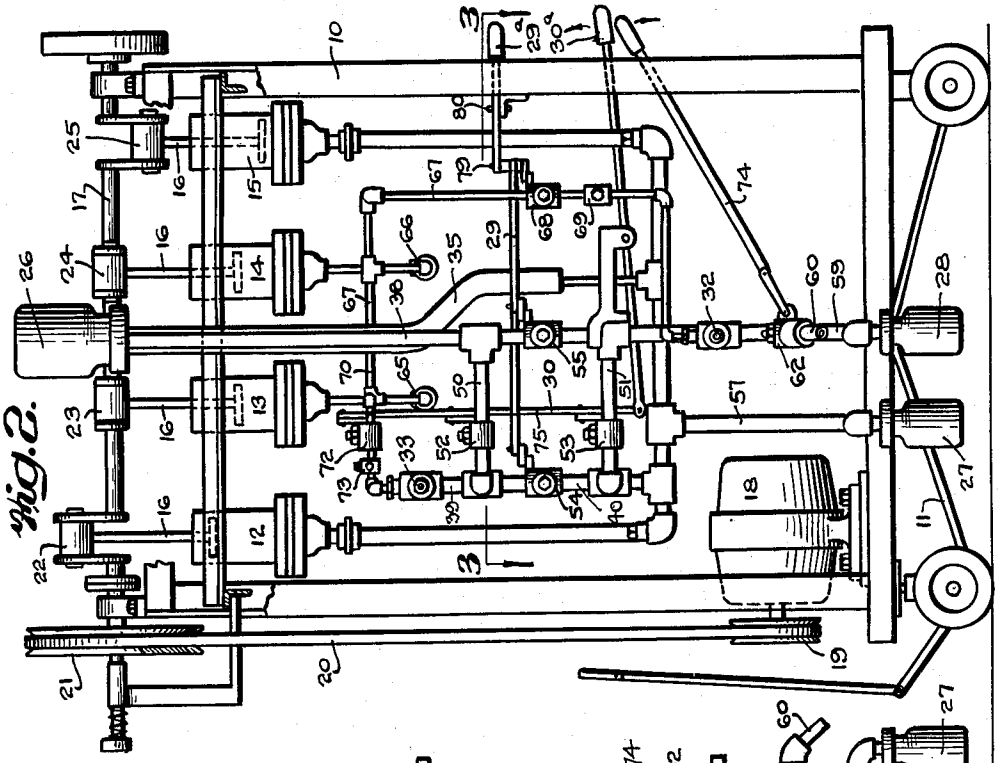

Fig. 2.

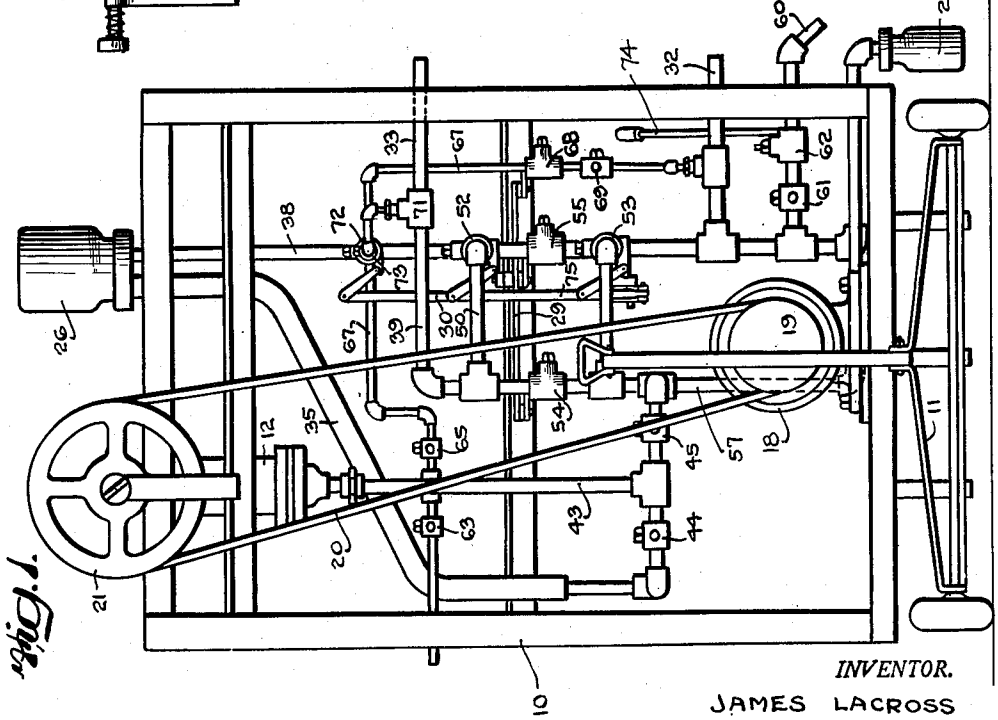

Fig. 1.

INVENTOR.
JAMES LACROSS
BY
L. Em Edelson
ATTORNEY

June 6, 1950 J. LA CROSS 2,510,701

APPARATUS FOR CLEANING AND FLUSHING AUTOMOBILE RADIATORS AND THE LIKE

Filed Jan. 6, 1948 2 Sheets-Sheet 2

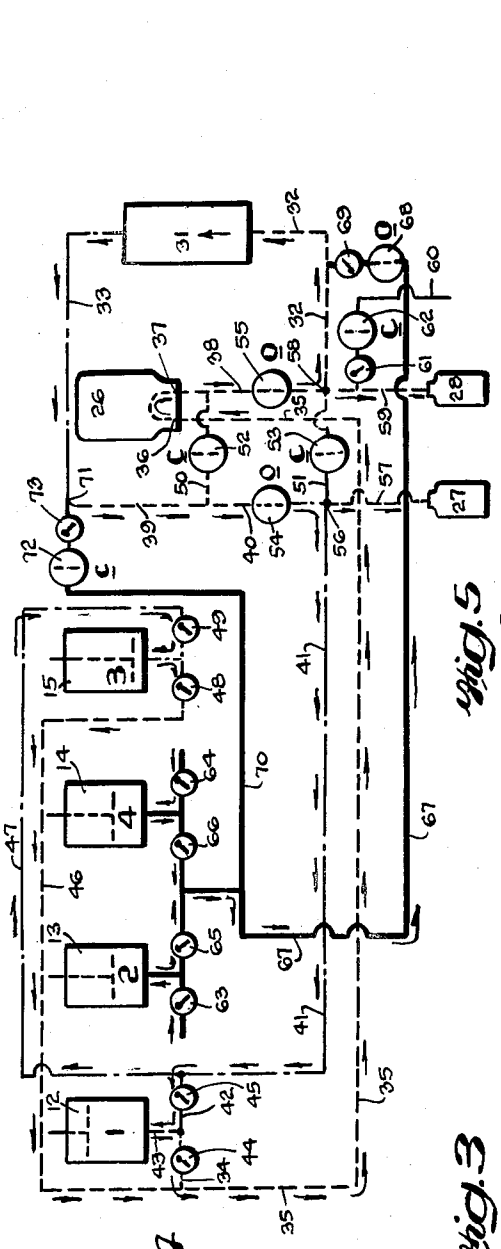

Fig. 4

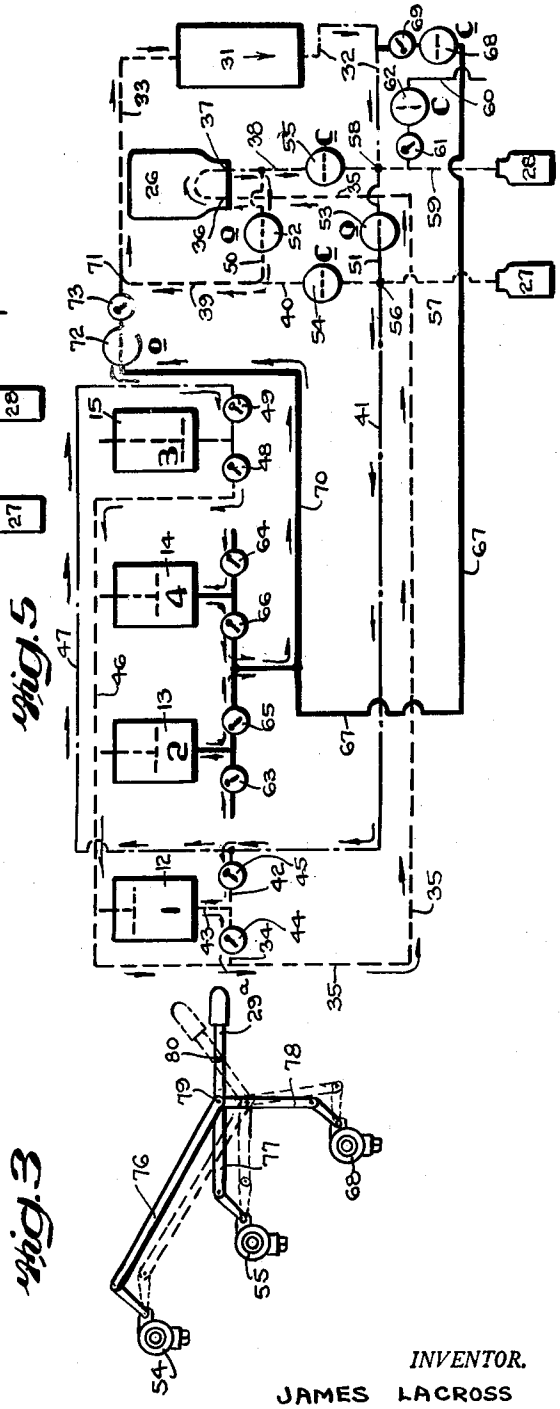

Fig. 5

Fig. 3

INVENTOR.
JAMES LACROSS
BY Leon Edelson
ATTORNEY

Patented June 6, 1950

2,510,701

UNITED STATES PATENT OFFICE

2,510,701

APPARATUS FOR CLEANING AND FLUSHING AUTOMOBILE RADIATORS AND THE LIKE

James La Cross, Shamokin, Pa.

Application January 6, 1948, Serial No. 799

3 Claims. (Cl. 134—95)

1

This invention relates to apparatus for cleaning radiators of internal combustion engines and other such tubular or cellular structures, and more particularly to an apparatus of the character disclosed in my copending application, Serial No. 649,499, filed February 23, 1946.

Among the general objects of the present invention are to provide an easily operated, highly efficient apparatus for subjecting the radiator to several successive types of treatment, each aiming to remove obstructions in and to clean thoroughly the passages of the radiator, such types of treatment including alternately subjecting liquid and air in the radiator tubes or cells to pulsations tending to dislodge and flush from the radiator all solids causing clogging of the radiator system.

More specifically, it is an object of the present invention to provide an apparatus for and system of cleaning radiators, coils and the like wherein a cleansing liquid is initially pumped through the cells or tubes of the device to be cleaned, following which the pumped column of cleansing liquid is subjected to the ramming action of a column of air to further force the liquid through the clogged cells or tubes to thereby dislodge and carry from such cells or tubes any solids tending to clog the same.

A further and important object of the present invention is to provide an apparatus wherein a plurality of sequentially operated fluid pressure pumps act to alternately pump columns of water and air into and through the cells or tubes of the heat transfer device to be cleaned, such as an automobile radiator, the air column being employed in the nature of a piston or ram upon a column of water to force the latter through the radiator, the apparatus including valve controlled conduits which insure proper sequential flow of the liquid and air through the system.

Still another object is to provide an apparatus of the character described wherein a plurality of valves are simultaneously operated by a single manually controlled lever to insure not only proper sequential movement of the liquid and air columns to and through the radiator or the like to be cleaned, but also to provide for reverse movement of the liquid column through the radiator and the ramming thereof through the radiator by a following column of air.

Other objects and advantages of the present invention will appear more fully hereinafter, it being understood that the invention consists substantially in the combination, construction, location and relative arrangement of parts, all as will

2

be described in detail hereinafter, as shown in the accompanying drawings and as finally pointed out in the appended claims.

In the accompanying drawings:

Figure 1 is an end elevational view of the apparatus of the present invention;

Figure 2 is a side elevational view thereof;

Figure 3 is a view of the valve-actuating lever mechanism as viewed from the line 3—3 of Figure 2;

Figure 4 is a diagrammatic view illustrating operation of the apparatus for introduction of cleansing water to one outlet of a radiator to be flushed; and

Figure 5 is a diagrammatic view illustrating operation of the apparatus when the flow of cleansing liquid is reversed for introduction thereof to the opposite outlet of the radiator.

Referring now to the drawings and more particularly to Figures 1 and 2 thereof, it will be observed that the apparatus of the present invention is in the form of a compact portable unit comprising an open framework 10 suitably mounted upon a wheeled understructure 11, the framework supporting at its upper end a plurality of fluid pressure pumps 12, 13, 14 and 15, each in the form of a stationary cylinder having a single-acting piston movable therein. The pistons of the several cylinders are respectively connected by their piston rods 16 to a crank-shaft 17 suitably journalled across the top of the framework 10, said crank-shaft being driven by an electric motor 18, the drive pulley 19 of which is connected by a belt 20 to the crank-shaft pulley 21. The crank-shaft 17 is provided with a plurality of angularly related cranks 22, 23, 24 and 25, which are respectively operatively connected to the several piston rods 16 of the fluid pressure pumps 12, 13, 14 and 15 to effect the desired sequential operation of the latter. Preferably, the sequence of operation of the fluid pressure pumps is in the following order: first, pump 12; second, pump 13; third, pump 15; and fourth, pump 14, such sequence being indicated in the diagrammatic views of Figures 4 and 5 by the numerals 1, 2, 3 and 4.

The fluid pressure pumps 12 and 15 are designed to move columns of water through the cleansing system, while the fluid pressure pumps 13 and 14 are designed to move columns of air therethrough. Because of the aforesaid sequence of operation of these fluid pressure pumps, it will be apparent that the column of water moved by the pump 12 is followed by a column of air moved by the pump 13, this column of air being then

succeeded by a column of water moved by the pump 15, which column of water is then followed by a column of air moved by the pump 14. This cycle of operation is continued so long as the apparatus is maintained in operation, so that each column of water which is moved by one or the other of the water pumps 12 and 15 is followed by a column of air moved by one or the other of the air pumps 13 and 14.

Also carried by the framework 10 of the apparatus are the several conduits leading to and from the several fluid pressure pumps, as well as a sight vessel 26 for indicating the condition of the radiator or other device undergoing treatment and the containers 27 and 28 for receiving the solids flushed from the radiator. The several conduits connected to the inlet and outlet ports of the several fluid pressure pumps are respectively provided with suitable shut-off valves and check valves for insuring proper direction of flow of the water and air through the system, the check valves being automatically operative for unidirectional flow of the fluid therethrough, while the shut-off valves are manually operable by two sets of lever mechanisms 29 and 30 conveniently located and arranged to effect simultaneous actuation of the main shut-off valves arranged in two groups thereof, these mechanisms being respectively operated by the handles 29a and 30a.

The general arrangement of the fluid (water and air) conduits and of the control valves is best shown in the diagrammatic views of Figures 5 and 6. Referring now to these figures, it will be observed that the device to be flushed and cleaned of accumulated solids and debris, such as an automobile radiator designated generally by the numeral 31, is connected in circuit with the apparatus of Figures 1 and 2 so that its outlet and inlet ends are respectively connected, by suitable lengths of hose (not shown), to the open ends of the water conduits 32 and 33 (see Figures 1 and 2) forming fixed elements of the apparatus. The system is then filled with water by way of the conventional water-filling opening in the top of the radiator, a sufficient amount of water being introduced to fill not only the radiator but also all of the water conduits extending between it and the water pumps 12 and 15. These water conduits are represented in Figures 4 and 5 by the broken lines, while the air conduits extending between the radiator and the air pumps 13 and 14 are represented by the relatively heavy unbroken lines.

It will be noted that the water pump 12 is connected by way of water discharge conduits 34 and 35 to the inlet 36 of the sight vessel 26 and that the outlet 37 of said vessel is connected by the water conduits 38 and 32 to the lower end of the radiator 31. The upper end of the radiator is in turn connected to the water pump 12 by the water conduits 33, 39, 40, 41 and 42 all connected in series. The conduits 34 and 42 are connected for common communication by way of the conduit 43 with the single opening into the operating head of the pump 12. Check valves 44 and 45 are included in the branch conduits 34 and 42 to insure unidirectional flow of the water out of the pump 12 by way of the conduit 34 upon outward stroke of the pump piston and into the pump by way of the conduit 42 upon the inward or suction stroke of the pump piston.

The water pump 15 is connected in parallel with the pump 12 to also circulate water to and through the radiator, the single opening in the operating head of said pump 15 being connected to the water delivery conduit 35 by a branch conduit 46 and to the water return conduit 41 by a branch conduit 47. As in the case of the pump 12, the branch conduits 46 and 47 leading from and to the pump 15 are respectively fitted with check valves 48 and 49 to insure unidirectional flow of water from the pump to the radiator and thence back to the pump.

A pair of by-pass conduits 50 and 51 respectively interconnect the conduits 38 and 40 to form a closed circuit of four branches, each of these branches including therein a manually operated shut-off valve respectively designated 52, 53, 54 and 55. The branch conduit 40 connects, as at 56, with a line 57 dropping vertically to the mouth of the debris-receiving container 27, while the branch conduit 38 connects, as at 58, with a line 59 dropping vertically to the mouths of the debris-receiving container 28. The water system is completed by the provision of a discharge conduit 60 connected to the line 59, this discharge conduit including therein a check valve 61 and a manually controlled shut-off valve 62.

The supply of air under pressure from the air pumps 13 and 14 to the radiator 31 is by way of the conduits represented by the relatively heavy lines shown in Figures 4 and 5. Air is drawn into the operating head of each air pump from atmosphere by way of the check valves 63 and 64, the air being then forced therefrom upon the down strokes of the pumps by way of the check valves 65 and 66. As mentioned hereinbefore, the air pumps 13 and 14 operate alternately with respect to the water pumps 12 and 15, air from the air pumps 13 forced by way of the air conduit 67 and through the shut-off valve 68 and check valve 69 into the water line 32 so as to ram the water contained in said line into and through the radiator. By reason of the timed operating relation of the several pumps 12, 13, 14 and 15, the columns of water alternately delivered by the water pumps to the radiator are each rammed by a column of air alternately discharged under pressure from the air pumps, the radiator core being thus subjected to injection of successive columns of water under the influence of a following column of air under pressure. Thus, the water is injected into the radiator and forced therethrough in the form of a successive series of impulses which act to dislodge from the radiator core solids tending to block the free passage of water therethrough.

A second air conduit 70, branching off from the air conduit 67, connects to the water line 33, as at 71, said air conduit 70 including therein a shut-off valve 72 and a check valve 73. This second air conduit 70 is operative to direct the air flow from the air pumps 13 and 14 against the column of water entering the top of the radiator 31 when the water flow therethrough is reversed in direction as shown in Figure 5. For operation of the system as shown in Figure 4, that is, for injection of the water into the bottom end of the radiator, the valve 72 is closed to render effective only the air line 67.

It will be noted that for direct operation of the system, as shown in Figure 4, the shut-off valves 52, 53 and 72 are closed, while the shut-off valves 54, 55 and 68 are open. For reverse operation of the system, as shown in Figure 5, the shut-off valves 52, 53 and 72 are open, while the shut-off valves 54, 55 and 68 are closed. The single discharge valve 62 is always closed dur-

ing operation of the apparatus, this valve being opened only when it is desired to drain the whole system of water, as when the cleansing and flushing of the radiator has been completed. Preferably, the valve **62** is provided with a handle **74** for convenient actuation thereof.

It will be understood that any desired lever mechanisms may be employed for effecting synchronous operation of the valves **52**, **53** and **72** and of the valves **54**, **55** and **68**. In the arrangement illustrated, the actuating levers for the valves **52**, **53** and **72** are coupled together for simultaneous operation by a shifting link or rod **75**, while the actuating levers for the valves **54**, **55** and **68** are simultaneously operated by means of links **76**, **77** and **78** pivotally secured together, as at **79**, these links being commonly shifted into valve-opening or valve-closing positions by the handle **29a** pivoted to the frame, as at **80**, and connected to the links at their common point of pivotal securement.

In operation of the apparatus of the present invention, having connected the radiator or other such device in water-circulating communication with the conduits **32** and **33** and having filled the water system with water, upon starting the motor **18** the several pumps **12**, **13**, **14** and **15** reciprocate in the order previously indicated to subject the radiator to successive impulses of water under pressure. Assuming the valves **54**, **55** and **68** are open while the valves **52**, **53** and **72** are closed, as indicated in Figure 4, water from the pump **12** is forced to and through the radiator under positive pressure of the pump by way of the conduits **43**, **34**, **35**, **38** and **32**, such water passing through the sight vessel **26**. On the return or suction stroke of the pump **12**, the water is pulled from the radiator to the pump by way of the conduits **33**, **39**, **41**, **42** and **43**.

Immediately following completion of the pressure stroke of pump **12** the pump **13** operates to force air through the conduit **67** into the line **32** to impose upon the column of water contained therein a driving force tending to ram the water through the radiator, following which a succeeding column of water is forced under positive pressure to and through the radiator by operation of the water pump **15**, this succeeding column of water being delivered to the radiator by way of the conduits **46**, **35**, **38** and **32**, and being thereafter rammed through the radiator by the pressure of air discharged from the air pump **14** by way of the conduit **67**. As in the case of the water pump **12**, the water pump **15** also induces a suction pull on the radiator upon the return or suction stroke of said pump to pull the water from the radiator by way of the conduits **33**, **39**, **40**, **41** and **47**. The operational timing of the several pumps **12**, **13**, **14** and **15** is such that as one of the air pumps forces air under positive pressure to the water inlet end of the radiator the water is simultaneously pulled from the outlet end of the radiator by the suction pull of one of the water pumps. This cycle of operation is continued until the appearance of the water coursing through the sight vessel **26** indicates that the radiator has been cleared of all accumulation of clogging sediment and solids. The degree of freedom with which the water courses through the sight vessel **26** indicates also the extent to which the radiator has been cleared of obstructions to free passage of water therethrough. As the water circulates through the system, the solids dislodged from the radiator are carried by

the water across the points **56** and **58** from whence they drop by gravity into the containers **27** and **28**.

It will be understood that the apparatus of the present invention provides alternate columns or slugs of water separated by intervening columns or slugs of air, the operation being such that the impulse given to the water by the air in the piping of the apparatus forces the water ahead of the air. Consequently, as each slug of water enters the radiator it is under the impetus of a following slug of air which is subsequently bled from the system through the radiator overflow.

Should the radiator **31** be blocked to such extent that water cannot be pumped therethrough, such condition would be indicated by a rise of the water level in the sight vessel **26**, this by reason of lack of free circulation of the water therethrough. In such case, the several shut-off valves are so reversed as to open the valves **52**, **53** and **72** while closing the valves **54**, **55** and **68**, as indicated in Figure 5. Upon such reversal of these valves, the direction of flow of the water to the radiator is reversed from that shown in Figure 4 so that the water is delivered under positive pressure to the top of the radiator and is withdrawn by the suction pull of the water pumps from the bottom of the radiator. This reversal in flow of the water is effected by way of the by-pass conduit **50**, the air under pressure from the air pumps **13** and **14** being then delivered to the radiator by way of the air conduit **70**, which communicates with the conduit **33** at the point **71**. Except for this reversal in direction of flow of the water and air to and through the radiator, the cycle of operation is the same for the system shown in Figure 5 as it is for that shown in Figure 4. By successive reversals of the system, each end of the radiator may be subjected to the action of the water pumps **12** and **15** successively under positive pressure and suction pull, the application of water under positive pressure being in each instance followed by an impulse of air delivered under pressure by the air pumps **13** and **14**.

In Figures 4 and 5, the directions of flow of the water and air through the system are indicated by the arrows, while the condition of the valves determining the direction of flow of the water and air is designated by the letters O and C, the open valves being designated O and the closed valves C.

What is claimed as new and useful is:

1. An apparatus for cleaning radiators and the like comprising, in combination, a plurality of pumps sequentially operated by angularly related cranks of a crankshaft to alternately force water and air through the radiator in the form of separate impulses, the water pump being connected in closed circuit with the radiator and being operative to force water into one end of the radiator and draw water from the other end thereof, the air pump being connected to the water inlet end of the radiator, and valve means for directing the water and air unidirectionally through the radiator.

2. An apparatus for cleaning radiators and the like comprising, in combination, a plurality of pumps sequentially operated by angularly related cranks of a crankshaft to alternately force water and air through the radiator in the form of separate impulses, the water pump being connected in closed circuit with the radiator and being operative to force water into one end of

the radiator and draw water from the other end thereof, the air pump being connected to the water inlet end of the radiator, and valve means for directing the water and air unidirectionally through the radiator, each increment of water delivered to the radiator by the water pump being subjected to the ramming action of a following impulse of air.

3. An apparatus for cleaning radiators and the like comprising, in combination, a plurality of single acting pumps each having a cylinder and a reciprocating piston, means for operating said pumps in sequentially timed relation, a main water circulating system interconnecting the radiator with the cylinder of at least one of said pumps in such manner that each outward stroke of the piston of said cylinder forces water into one end of the radiator and each return stroke thereof draws water from the other end of the radiator, and a main air circulating system interconnecting the cylinder of another one of

said pumps with the water inlet end of the radiator in such manner that upon each outward stroke of the piston of said other pump a pressure head of air is applied to the water in the radiator.

JAMES LA CROSS.

REFERENCES CITED

The following references are of record in the file of this patent:

UNITED STATES PATENTS

Number	Name	Date
1,078,253	Carey et al.	Nov. 11, 1913
1,826,015	Morton	Oct. 6, 1931
1,896,004	Lewis et al.	Jan. 31, 1933
1,908,875	Van Clemens	May 16, 1933
2,222,516	Powell et al.	Nov. 19, 1940
2,254,824	Large	Sept. 2, 1941
2,410,162	Horan	Oct. 29, 1946