No. 616,053. Patented Dec. 13, 1898.

L. D. CASTLE.

MACHINE FOR GRINDING VALVES.

(Application filed July 6, 1898.)

(No Model.) 3 Sheets—Sheet 1.

Fig. 1.

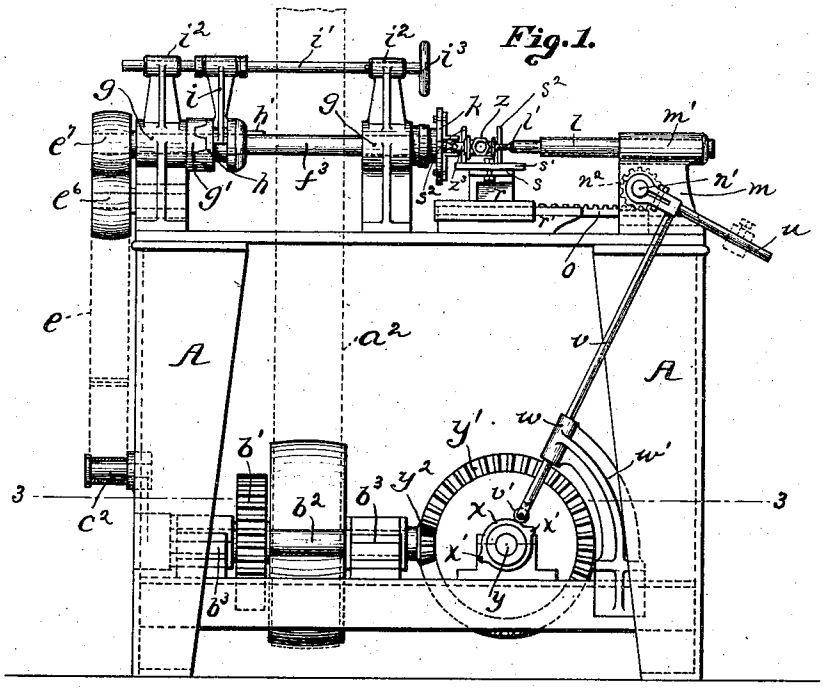

Fig. 2.

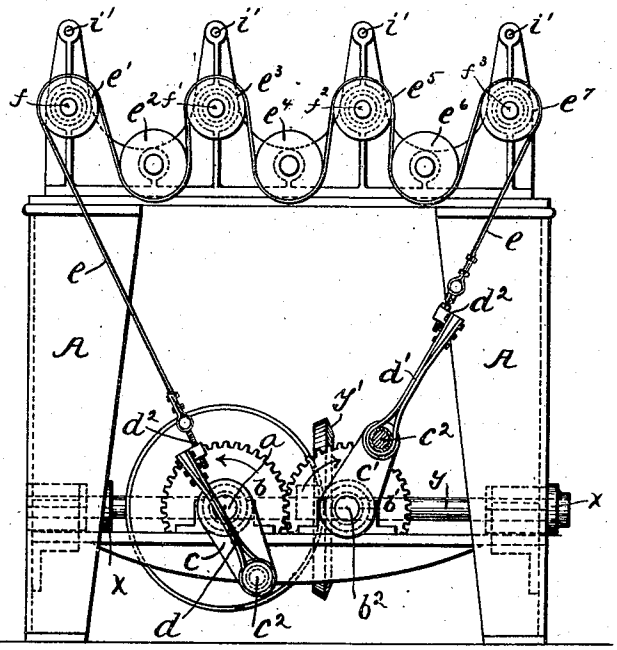

Witnesses:
Walter Famariss
Lindsay & B. Little

Inventor:
Lewis D. Castle
By Kay & Gotten
Attorneys.

No. 616,053. Patented Dec. 13, 1898.

L. D. CASTLE.

MACHINE FOR GRINDING VALVES.

(Application filed July 6, 1898.)

(No Model.) 3 Sheets—Sheet 2.

Fig. 3.

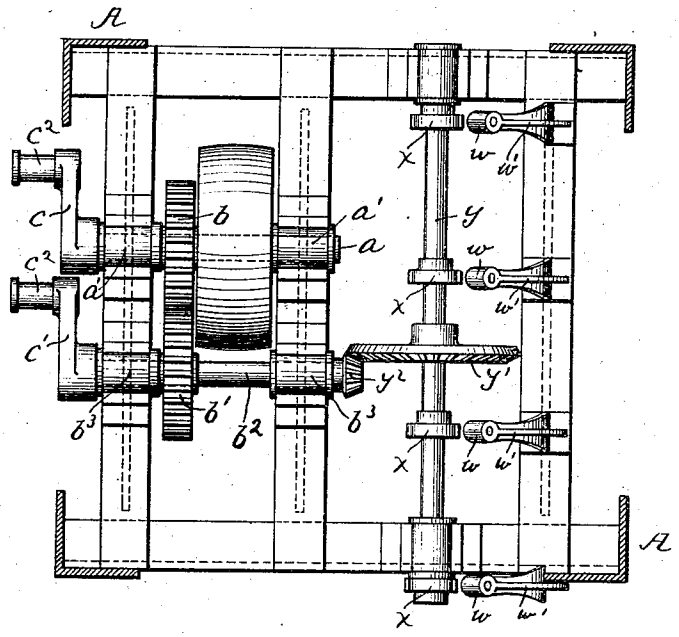

Fig. 4.

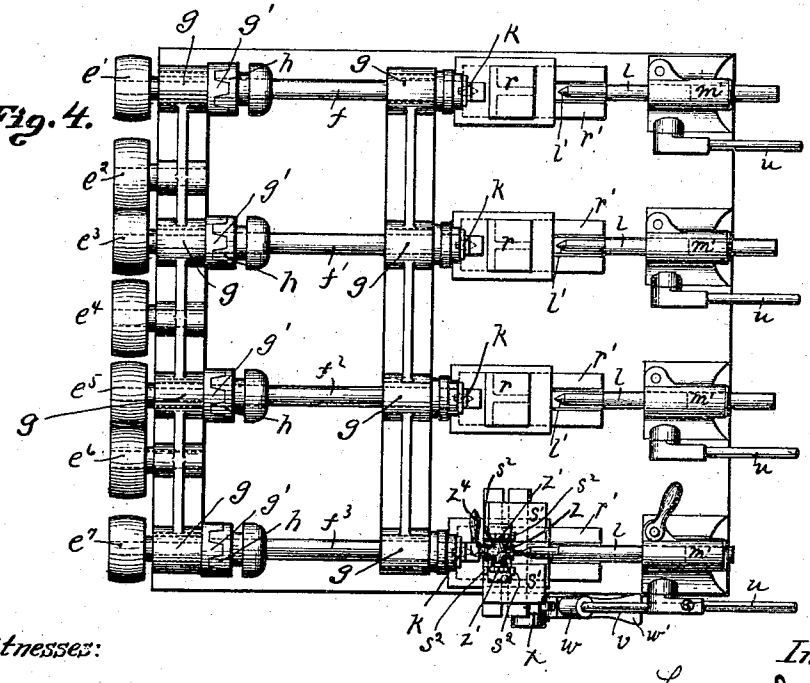

Witnesses:

Walter Samariss

Lindsay de B. Little

Inventor:

Lewis D. Castle

By Kay & Totten

Attorneys.

No. 616,053. Patented Dec. 13, 1898.

L. D. CASTLE.

MACHINE FOR GRINDING VALVES.

(Application filed July 6, 1898.)

(No Model.) 3 Sheets—Sheet 3

Fig. 5.

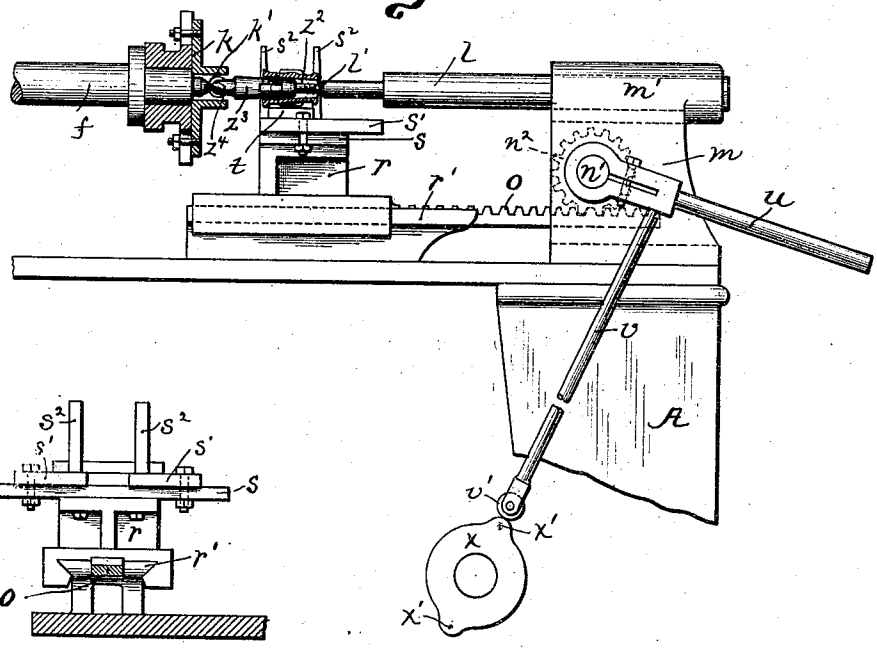

Fig. 6.

Fig. 7.

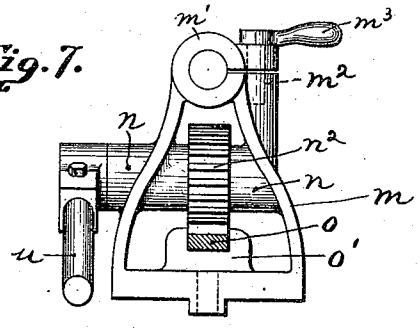

Witnesses:

Walter Samaris.

Lindsay deB. Little

Inventor:

Lewis D. Castle

By Kay & Gatten

Attorneys.

UNITED STATES PATENT OFFICE.

LEWIS D. CASTLE, OF GREENSBURG, PENNSYLVANIA, ASSIGNOR TO JOHN T. KELLY, OF NEW YORK, N. Y., AND GEORGE M. JONES, OF PITTSBURG, PENNSYLVANIA.

MACHINE FOR GRINDING VALVES.

SPECIFICATION forming part of Letters Patent No. 616,053, dated December 13, 1898.

Application filed July 6, 1898. Serial No. 685,254. (No model.)

To all whom it may concern:

Be it known that I, LEWIS D. CASTLE, a resident of Greensburg, in the county of Westmoreland and State of Pennsylvania, have invented a new and useful Improvement in Machines for Grinding Valves; and I do hereby declare the following to be a full, clear, and exact description thereof.

My invention relates to machines for grinding valves and seats.

In the accompanying drawings, Figure 1 is a side elevation of the machine. Fig. 2 is an end view. Fig. 3 is a cross-section on line 3 3, Fig. 1. Fig. 4 is a top plan view. Fig. 5 is an enlarged side view of a portion of the machine, partly in section. Fig. 6 is a detail view of the support for the valve-body. Fig. 7 is a detail view of a portion of the mechanism for moving the support for the valve-body.

Like letters of reference indicate like parts in each of the figures.

The letter A designates a suitable frame upon which the parts are mounted. A shaft a, journaled in bearings a', has mounted thereon the main driving-pulley connected by the belt a^2 to a suitable power-shaft. Secured to the shaft a is the gear-wheel b, which meshes with the gear-wheel b' on the shaft b^2, journaled in bearings b^3. Secured to the outer ends of the shafts a b^2 are the cranks c c'. To the wrist-pins c^2 of said cranks are attached the straps d d'. At the outer ends of the straps d d' are the belt-connectors d^2, which connect the belt e to said straps. These belt-connectors are of such construction that they can be adjusted so as to tighten or slacken the belt, as may be desired.

The belt e passes up over the end pulleys e' e^7, thence alternately under and over the remaining pulleys e^2 e^3 e^4 e^5 e^6 of the series. The pulleys e' e^2 e^5 e^7 are secured to the shafts f f' f^2 f^3, respectively. These shafts f f', &c., are journaled in bearings g on the frame.

The cranks c c' are so mounted with relation to each other that when said cranks are in the positions shown in Fig. 2 lines drawn through the centers of the cranks and their wrist-pins will be in line with the belt as it passes over the end pulleys e e^7, the wrist-pin of the crank c being below the center of the crank and the wrist-pin of the other crank being above the center. By this arrangement the cranks can pass each other without interfering.

On the inner ends of the shafts f f' f^2, &c., are the clutches g'. These clutches g' are adapted to engage the sliding clutches h, keyed to the shafts f f' f^2 f^3 by the feathers h'. Hangers i on the slide-rods i' engage the annular grooves in the clutches h. The rods i' are mounted in guides i^2 and have the handles i^3, by means of which they are moved back and forth to throw the clutches into and out of engagement with each other.

Secured to the ends of the shafts f f', &c., are the chucks k, having the centering-pins k', adapted to engage one end of the valve-plug in the manner fully hereinafter set forth. In line with centering-pins k' of the chucks k are the centering-rods l, having the pointed ends l', adapted to engage the opposite end of the valve-plug. The rods l are inserted in the split sleeves m' at the upper ends of the standard m and are clamped therein by the bolts m^2, adapted to be turned by the handle m^3.

The standards m have the bearings n to receive the short shafts n', upon which are secured the pinions n^2. These pinions n^2 mesh with the movable rack-bars o in the guides o' of the standards.

Secured to the rack-bars o are the carriages r, adapted to carry the valve-bodies, as will more fully hereinafter appear. These carriages r ride on the dovetailed guideway r'. Secured to the carriages r are the plates s and to said plates the adjustable plates s'. These adjustable plates s' are connected to the plate s by means of bolts passing through slots in said plate s, whereby the position of said plates s' with relation to each other may be varied. On the plates s' are posts s^2, which form a seat for the reception of the valve-body. A liner t is placed in this seat to support the valve-body at certain times.

An arm u is secured to the shaft n', and said arm may carry a weight at its outer end, if necessary. A rod v abuts against the arm

u, said rod passing through the guide w on the bracket w'. At the lower end of the rod v is the roller v', which moves in contact with the knocker-disk x, having the knockers x' thereon. On the same shaft y which carries the knockers is the bevel gear-wheel y', which meshes with the bevel-pinion y^2 on the shaft b^2.

I do not wish to be understood as limiting myself in any sense to the particular mechanism shown and described, as it may be modified and varied without affecting the spirit of my invention.

The operation of my machine as applied to the grinding of a valve and seat is as follows: The valve-body z is an ordinary form of valve-body with the connection z' for connecting it up to the pipe and having the customary tapering seat z^2 extending through it at right angles to said connections. Within the tapering seat is the tapering plug z^3, with the handle z^4. The unfinished valve-body and plug are adjusted into position to be operated upon by dropping the valve-body down into the seat formed by the posts s^2, whereupon the ends of the plug z^3 will project beyond said posts in line with the centering-points of the chuck k and the rod l. The rod l is then forced into contact with the end of the plug adjacent thereto, forcing the other end of said plug onto the chuck k. The plug is thus clamped in position, and the valve is ready for the grinding operation. The operator applies to the plug before insertion a suitable mixture of grease and abrading material. The clutch h is then thrown into engagement with the clutch g', which imparts a rotary movement to the chuck k, and consequently to the plug z^3, centered thereon. This rotary movement, however, is oscillatory, owing to the action of the belt e. From the description hereinbefore set forth it is apparent, as clearly set forth in Fig. 2, that the gear-wheels b b' travel in opposite directions, as indicated by the arrows. With the cranks in the position shown in said Fig. 2 as said gear-wheels continue to revolve the crank c will begin to ascend in the direction of rotation of its gear-wheels b, while the crank c' will begin to descend in an opposite direction. As this movement continues the belt e will rotate the pulleys e' e^3 e^5 e^7 all in the same direction. The said pulleys will continue to rotate in this direction until the crank c reaches its highest point and the crank c' reaches its lowest point, whereupon as said crank c begins to descend and crank c' to ascend the pulleys e' e^3 e^5 e^7 will be rotated in the opposite direction. Just when the crank c arrives at its highest point and crank c' at its lowest point a slight slack takes place in the belt e and it slips slightly, so that even after the cranks have passed a short distance beyond their highest and lowest points the momentum imparted to the pulleys e' e^3 e^5 e^7 by the travel of the cranks to these points will cause said pulleys to continue to rotate in the same direction; but as said belt begins to tighten again when the cranks pass from their highest and lowest points the momentum of said pulleys is checked and their direction of rotation is reversed. In like manner when the cranks arrive at the positions shown in Fig. 2 the belt slackens slightly, as before, as the pulleys continue in the same direction until the cranks pass a short distance, the crank c in its upward movement and crank c' in its downward movement, whereupon the slack is taken up and the pulleys are reversed. This same oscillatory movement is of course imparted to the plugs z^3, working in the seats in the valve-bodies z. This movement of the plug first in one direction and then in the other, with the assistance of the abrading mixture, grinds the plug in its seat and removes the rough surfaces of the plug and its seat, leaving them smooth and polished, so that when the plug is seated a tight close union is effected. Furthermore, by the slight continued movement of the plug in the same direction, even after the reversing mechanism has in fact reversed the direction of rotation, the amount of movement of the plug is not constant. It may stop at a different point each time it is reversed, so that no more grinding is done at one point than at another. While the plug z^3 is being oscillated in the manner described, the valve-body z is being moved back and forth on the carriage v by the action of the knockers x' on the rod v. As the arm u is raised by the knockers it acts through the pinion n^2 to draw back the rack-bar o; but when the knockers pass from under the rod v the dropping of the arm u advances said rack-bar. In this manner the valve-body keeps moving back and forth on the plug. By throwing up the arm u the operator can draw the carriage supporting the valve-body away from the plug, which leaves the plug exposed for the purpose of applying more of the abrading mixture.

While I have described my invention with reference to the grinding of one valve and seat, it is of course apparent that the machine is capable of grinding four at one time and that this number may be increased or diminished according to circumstances.

What I claim as my invention, and desire to secure by Letters Patent, is—

1. In apparatus for grinding valves, the combination with a suitable frame, of an oscillatory shaft, a support for the valve on said shaft, a belt, and oppositely-driven cranks connected to said shaft by said belt, substantially as set forth.

2. In apparatus for grinding valves, the combination with a suitable frame, of an oscillatory shaft, a support for the valve on said shaft, mechanism for oscillating said shaft, a carriage adapted to support the valve-body, a rack-bar on said carriage, and mechanism for moving said rack-bar to and fro, substantially as set forth.

3. In apparatus for grinding valves, the

combination with a suitable frame, of an oscillatory shaft, a support for the valve on said shaft, mechanism for oscillating said shaft, a carriage adapted to support the valve-body, a rack-bar on said carriage, a pinion engaging said rack-bar, an arm connected to said pinion, and mechanism for raising and lowering said arm, substantially as set forth.

4. In apparatus for grinding valves, the combination with a suitable frame, of an oscillatory shaft, a support for the valve on said shaft, mechanism for oscillating said shaft, a carriage adapted to support the valve-body, a rack-bar on said carriage, a pinion engaging said rack-bar, an arm connected to said pinion, a slidable rod abutting against said arm, and a knocker moving in the path of said rod, substantially as set forth.

In testimony whereof I, the said LEWIS D. CASTLE, have hereunto set my hand.

LEWIS D. CASTLE.

Witnesses:

ROBT. D. TOTTEN,

ROBERT C. TOTTEN.