(No Model.)

3 Sheets—Sheet 1.

# M. F. McMAHAN.

## TRICYCLE.

No. 298,994. Patented May 20, 1884.

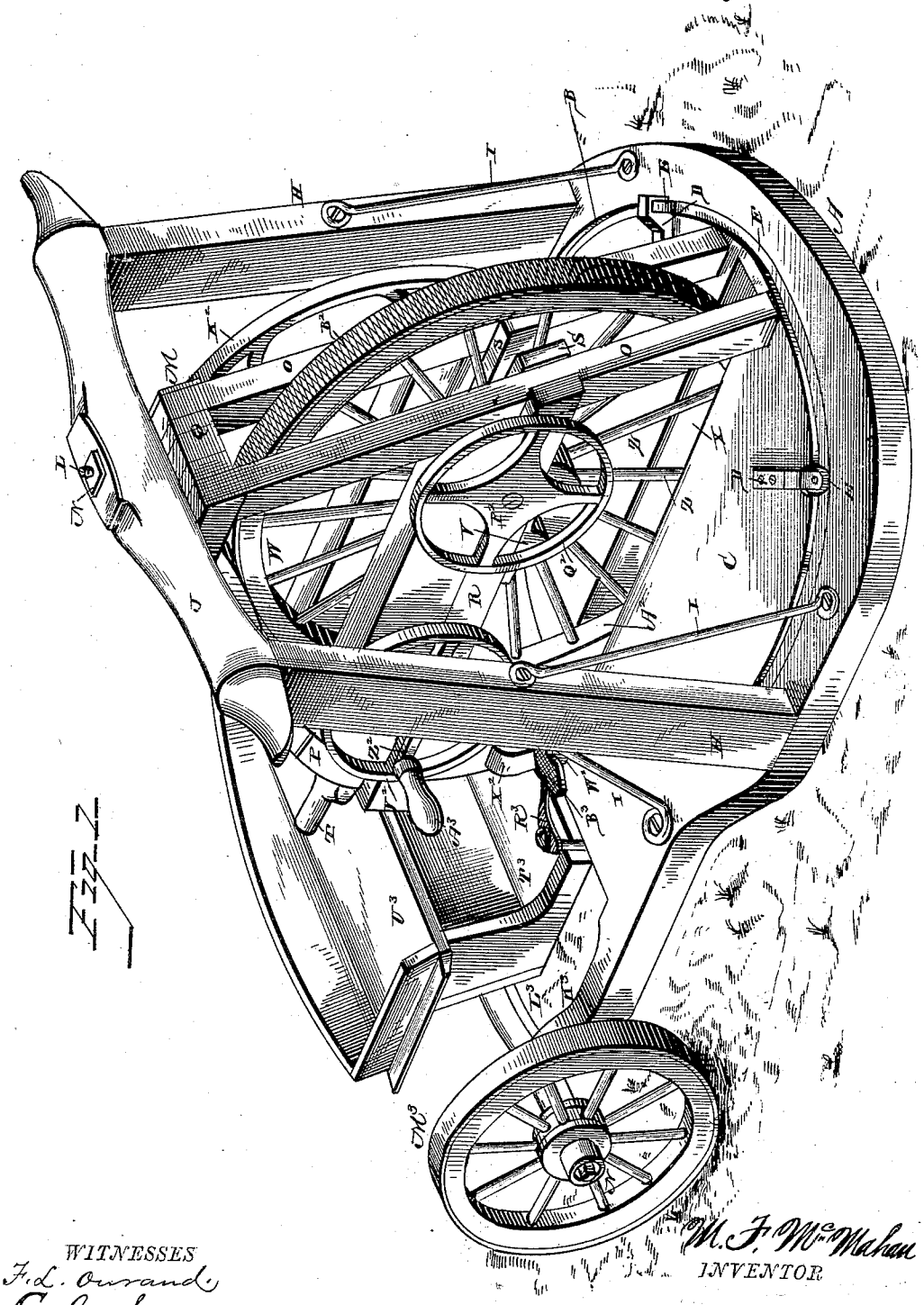

WITNESSES
F. L. Ourand.
E. G. Siggers.

M. F. McMahan
INVENTOR

by C. A. Snow & Co
Attorneys

N. PETERS. Photo-Lithographer. Washington. D. C.

(No Model.)

3 Sheets—Sheet 2.

# M. F. McMAHAN.

## TRICYCLE.

No. 298,994. Patented May 20, 1884.

Fig. 2.

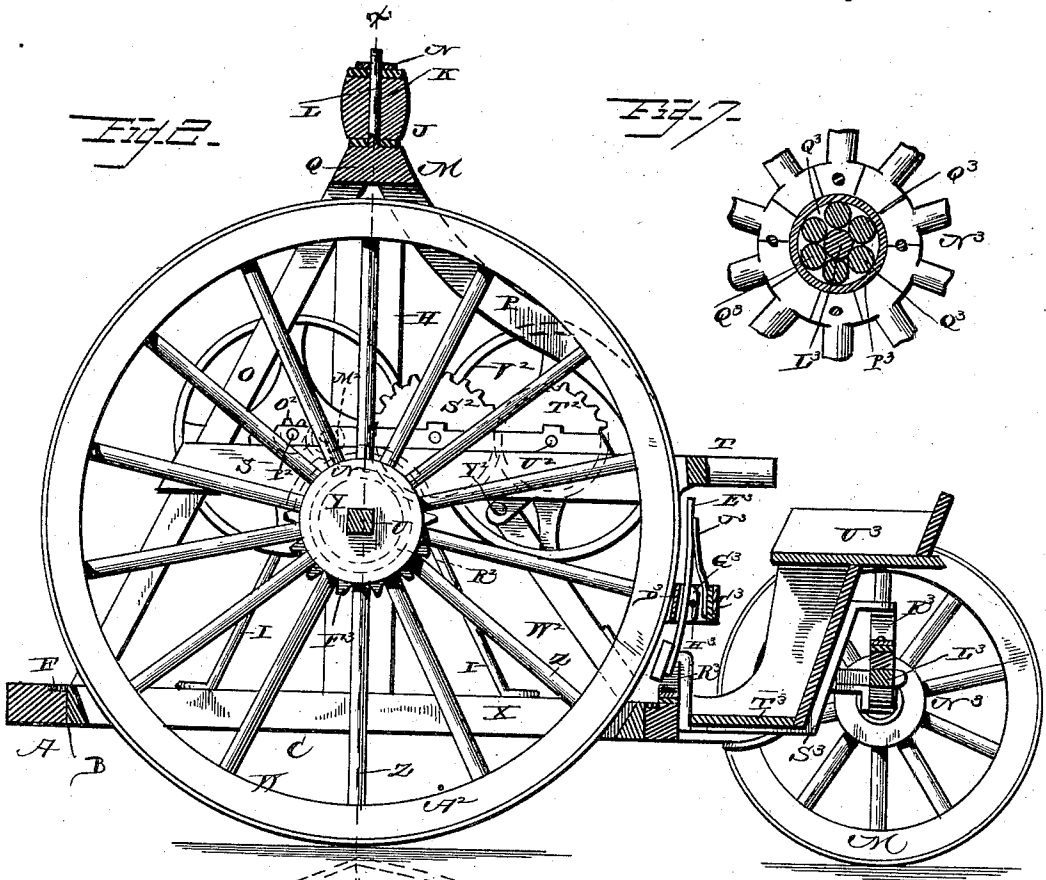

Fig. 7.



Fig. 5.

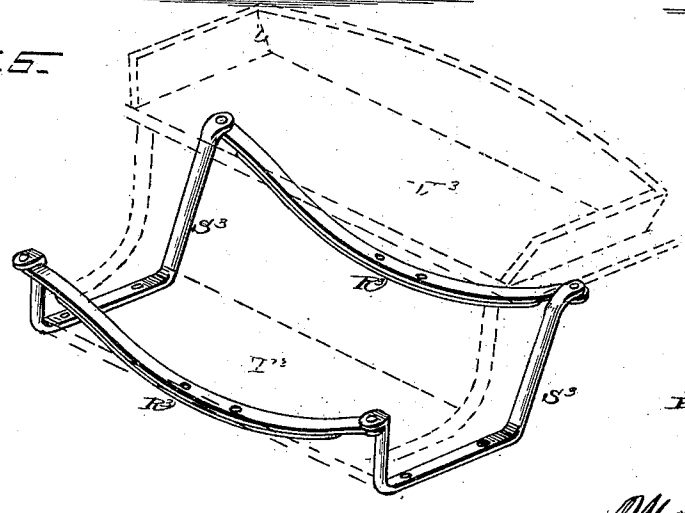

Fig. 6.

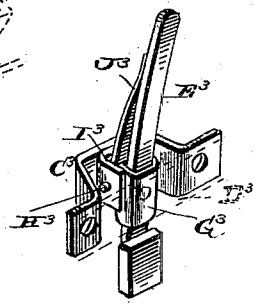

WITNESSES

F. L. Ourand

E. G. Siggers.

Matthias F. McMahan,

INVENTOR

by C. A. Snow & Co

Attorneys

N. PETERS. Photo-Lithographer. Washington, D. C.

(No Model.)

3 Sheets—Sheet 3.

# M. F. McMAHAN.

## TRICYCLE.

No. 298,994. Patented May 20, 1884.

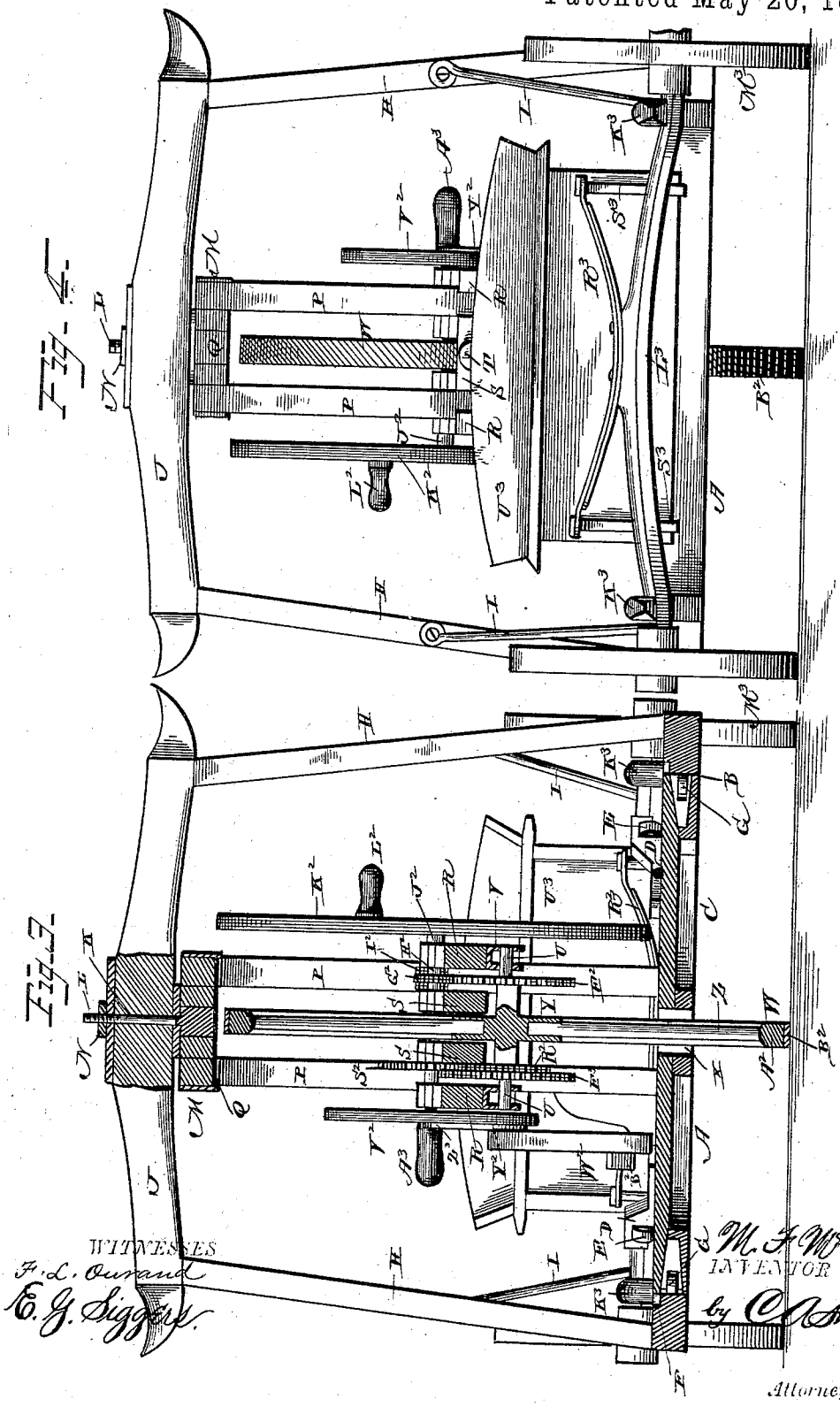

WITNESSES
F. L. Ousand
E. G. Siggers.

M. F. McMahan
INVENTOR
by Munn & Co
Attorneys

N. PETERS. Photo-Lithographer. Washington. D. C.

# UNITED STATES PATENT OFFICE.

MATTHIAS FRANKLIN McMAHAN, OF TRAPPE, ASSIGNOR OF ONE-HALF TO MATTHIAS MERRICK, OF KIRKHAM, MARYLAND.

## TRICYCLE.

SPECIFICATION forming part of Letters Patent No. 298,994, dated May 20, 1884.

Application filed March 11, 1884. (No model.)

*To all whom it may concern:*

Be it known that I, MATTHIAS F. McMAHAN, a citizen of the United States, residing at Trappe, in the county of Talbot and State of Maryland, have invented a new and useful Tricycle, of which the following is a specification, reference being had to the accompanying drawings.

This invention relates to tricycles; and it has for its object to provide a simple, durable, and efficient machine, which will be capable of carrying several persons with safety, the machine being readily governed and working with ease and rapidity.

To this end it consists in certain details of construction and combination of parts, as hereinafter set forth, and particularly pointed out in the claims.

In the accompanying drawings, Figure 1 is a perspective view of my improved tricycle with the cover fitted over the gearing. Fig. 2 is a longitudinal sectional view with the cover removed. Fig. 3 is a transverse sectional view on the line *x x*, Fig. 2. Fig. 4 is a rear view. Fig. 5 is a detail view of the seat. Fig. 6 is a detail view of the brake. Fig. 7 is a sectional view through one of the rear wheels, showing the friction rollers or balls.

Like letters of reference are used to indicate corresponding parts in the several figures.

Referring to the drawings, A designates the base or supporting-frame of my improved tricycle, circular in form, as shown, and provided with a central circular opening, B, a turn-table, C, being fitted in the opening, and provided with a series of casting plates or hangers, D D, carrying small wheels E E, which run on a track, F, around the mouth or edge of the opening B. Pulleys G G are journaled in sockets in the edge of the turn-table, and work against the base A around the opening B, said pulleys G, in connection with the wheels E, serving to permit the turning of the table with ease to cause the proper steering of the machine, as will be hereinafter described.

H H designate standards erected upon the base A on opposite sides, and provided with brace-rods I I, the upper ends of the standards being connected by a cross-head, J, provided with an opening, K, near its center, to receive a rod, L, projecting from a frame, M, to which the large steering-wheel and its operating mechanism are secured. The upper end of the rod L, which projects through the opening K, is screw-threaded, as shown, to receive a nut, N, the frame M being swiveled in the opening, so as to readily turn to cause the turning of the large wheel, the operating mechanism, and the table C, and thus aid in properly steering the vehicle. The frame M comprises parallel front inclined bars, O O, and rearwardly-curved bars P P, secured at their lower ends to the turn-table, converging upwardly and connected together at their upper ends by a cross-bar, Q, to which the rod L is attached. Longitudinal bars R R connect the outer faces of the bars O to the bars P, and bars S S connect the inner faces of the bars O to the bars P, the rear ends of the said bars S terminating in a handle, T, to be used in steering the machine.

U designates a shaft journaled in boxes V, secured to the under side of the bars R, the large steering-wheel W being mounted on the shaft and disposed between the bars O P of the frame M, the wheel working through a longitudinal slot, X, cut in the turn-table, so as to bear against the ground while in operation. The wheel W consists of a hub, Y, to which are secured the radial spokes Z, connected at their outer ends by the felly $A^2$, a metallic tire, $B^2$, being attached to the felly and serrated, like a file, so that the wheel may engage firmly with the ground while the machine is in operation. Gear-wheels $F^2$ $F^3$ are mounted on the shaft U on each side of the wheel W, between the bars R S, the gear-wheel $F^2$ engaging with a cog-wheel, $G^2$, on a shaft, $H^2$, said cog-wheel meshing with a pinion, $I^2$, on a shaft, $J^2$, which carries at its outer end a fly or balance wheel, $K^2$, the shafts $H^2$ $J^2$ being journaled in suitable boxes secured to the upper faces of the bars R S of the frame. The fly-wheel is provided with a handle, $L^2$, secured to one of its spokes, for operating the same. The gear-wheel $F^3$ engages with a cog-wheel, $M^2$, on a shaft, $N^2$, which likewise meshes with a pinion, $O^2$, on a shaft, $P^2$, carrying at its outer end a balance-wheel, $Q^2$, the

shafts $N^2$ $P^2$ being journaled in boxes secured to the upper faces of the bars R S. A gear-wheel, $R^2$, is formed integral with the inner face of the wheel $F^3$, and engages with a gear-wheel, $S^2$, which in turn meshes with a gear-wheel, $T^2$, mounted on a shaft, $U^2$, to the outer end of which is secured a driving-wheel, $V^2$, suitable boxes being secured to the bars R S to form journals for the wheel $S^2$ and the shaft $U^2$.

$W^2$ is a treadle pivoted to an extension, $X^2$, of the curved bars P at one end, and having at its other end a connecting-rod, $Y^2$, which is secured to the driving-wheel $V^2$, the operation of the treadle causing the turning of the driving-wheel, and the operation of the intermediate mechanism to turn the large steering-wheel W, in the manner to be hereinafter described. A crank-shaft, $Z^2$, connects the connecting-rod with the driving-wheel, and is provided with a suitable handle, $A^3$, to which the hands of the operator are applied in working the machine. A foot-piece, $B^3$, is secured to the rear end of the treadle, near the pivotal point, and is serrated on its upper face for the purpose of receiving the feet of the operator.

$C^3$ designates a casting or plate secured to the rear ends of the bars P, and $D^3$ is a cross-piece connecting the said bars, a brake-lever, $E^3$, being secured at its pivotal point to a U-shaped plate, $G^3$, pivoted by a bolt, $H^3$, in the sides of a corresponding U-shaped plate, $I^3$, secured to the casting $C^3$, above mentioned. A spring-plate, $J^3$, is attached at one end to the brake-lever and at its other end to the plate $I^3$, said spring serving to press the brake-lever out of contact with the serrations on the tire of the large wheel W.

$K^3$ designates extensions projecting rearwardly from the base A on each side, curving upward and forming journals at their rear ends for the axle $L^3$ of the rear wheels, $M^3$ $M^3$. The said wheels are constructed in the usual manner, with the exception that their hubs $N^3$ comprise two sections or sides, $O^3$, and a circular rim, $P^3$, the spokes being clamped between the side sections against the rim, and a series of rollers or balls, $Q^3$, being journaled in the side sections, and serving to lessen the friction of the axle $L^3$, and also enable the machine to run with ease.

$R^3$ $R^3$ designate elliptical springs secured to the axle $L^3$ and the base A, respectively, the ends of the springs being connected by side bars, $S^3$, having their central portions depressed, as shown, for the purpose of receiving the foot-board $T^3$ of the seat $U^3$, the latter being secured to the side bars by bolts, clips, or other suitable fastenings. It will be seen that the springs will give a yielding motion to the seat when traveling over rough ground, and thus obviate the sudden shocks resulting from this cause.

The operation of my invention will be readily understood from the foregoing description, taken in connection with the annexed drawings.

When it is desired to start the machine, the operator gives the handle of the balance-wheel $K^2$ several rapid turns to cause the turning of the large wheel W, and the consequent operation of the driving-wheel $V^2$. The operator then applies his foot to the treadle $W^2$ to continue the operation of the large wheel and cause the machine to move forward, the rapidity of movement being governed by the speed with which the treadle turns. When the operator becomes tired of working the treadle with his feet, he may apply his hands to the handle $A^3$ and operate the driving-wheel, and through the intermediate gearing cause the forward movement of the tricycle. In this manner the operator may use either his hands or feet, or both, and thus his feet will rest while his hands are in operation, so that he may travel a long distance on the vehicle without becoming tired. In making turns—as, for instance, around corners—the operator takes hold of the handle T and turns the large wheel W with the operating mechanism at any angle desired to make the necessary turn, the table C sliding on the rollers or wheels around the opening B of the base. Thus the operator may make long or short turns with one hand while his other hand is working the driving-wheel, the turning-handle being in a readily-accessible place, and acting with ease to properly steer the vehicle. When descending hills, or when it is desired to suddenly stop the tricycle, the operator causes the shoe of the brake-lever $E^3$ to engage with the serrations on the tire of the large wheel W, and thus stop the machine.

It will be seen that the spring-seat will avoid the sudden shocks when traveling over rough ground, and thus add to the comfort of riding on the tricycle. The balls or rollers in the hubs of the rear wheels, and also in the large wheel W, act to prevent or lessen the friction and to permit the machine to run easier. It will also be seen that the turn-table will allow the steering of the tricycle to be accomplished with ease, the entire operating mechanism moving with the turn-table, the latter turning over the base, as shown.

My improved tricycle is simple and durable in its construction and efficient in operation, and will prove of utility in use, the machine being capable of carrying several persons in the seat with the operator.

The tricycle is readily governed, and will not get out of order or upset when traveling over rough roads.

A suitable covering of tin is preferably arranged over the cog-gearing to inclose the same and prevent dust and dirt from accumulating in the teeth of the wheels.

The handle on the driving-wheel may be adjustable in length, as found desirable.

Having described my invention, I claim as new—

1. In a tricycle, the combination, with the base provided with a central opening, of the turn-table carrying the operating mechanism, and wheels or pulleys secured to the turn-table

and working on the base around the opening, as set forth.

2. In a tricycle, the herein-described hub, comprising the two side sections or disks, the circular rim, and the rollers or balls journaled in the side sections and bearing against the axle, whereby the friction is lessened and the machine runs with greater ease, as set forth.

3. In a tricycle, the herein-described brake, comprising the spring brake-lever, fitted to a U-shaped plate, a corresponding U-shaped plate to which it is pivoted, and an inclosing-frame, as set forth.

4. In a tricycle, the combination, with the base, of the turn-table moving in the same, a frame mounted on the turn-table and carrying the operating mechanism, and a handle formed on or attached to the rear end of the frame for steering the machine, as set forth.

5. In a tricycle, the combination, with the base and a frame arranged upon the same, of the turn-table moving in the base, a frame mounted on the turn-table and carrying the operating mechanism and swiveled in the frame of the base, a handle formed on or attached to the frame, and a seat arranged in rear of the frame, as set forth.

6. In a tricycle, the combination, with the base, of a turn-table moving in the same, a frame mounted on the turn-table, the steering-wheel journaled in the frame and working through the turn-table, a balance-wheel, treadle, and intermediate gearing connecting the balance-wheel and treadle to the steering-wheel, as set forth.

7. In a tricycle, the combination, with the base, of the turn-table moving in the same, a frame mounted on the turn-table, the steering-wheel mounted on a shaft journaled in the frame, a crank or handle connected by intermediate gearing with the steering-wheel, and a fly or balance wheel, as set forth.

8. In a tricycle, the combination, with the base, of a turn-table moving in the same, a frame mounted on the turn-table, the steering-wheel W, mounted on a shaft journaled in the frame, a driving-wheel, $V^2$, the intermediate gearing connecting the driving-wheel and steering-wheel, and operating means for the driving-wheel, as set forth.

9. In a tricycle, the combination, with the base, of the turn-table moving in the same, a frame mounted on the turn-table, the large wheel mounted on a shaft journaled in the frame, operating means for the same, and a balance or fly wheel connecting with the large wheel and adapted to start the machine, as set forth.

10. In a tricycle, the combination, with the base, of a turn-table provided with wheels or pulleys running on the base, the frame mounted on the turn-table, the large steering-wheel mounted in the frame, and operating means for the steering-wheel, as set forth.

In testimony that I claim the foregoing as my own I have hereto affixed my signature in presence of two witnesses.

MATTHIAS FRANKLIN McMAHAN.

Witnesses:
JAMES E. WILKINSON,
JAMES C. G. UNDUCH.