(No Model.) 3 Sheets—Sheet 1.

P. W. STEVENS.

HANDLE BAR FOR BICYCLES.

No. 564,848. Patented July 28. 1896.

Fig. 1.

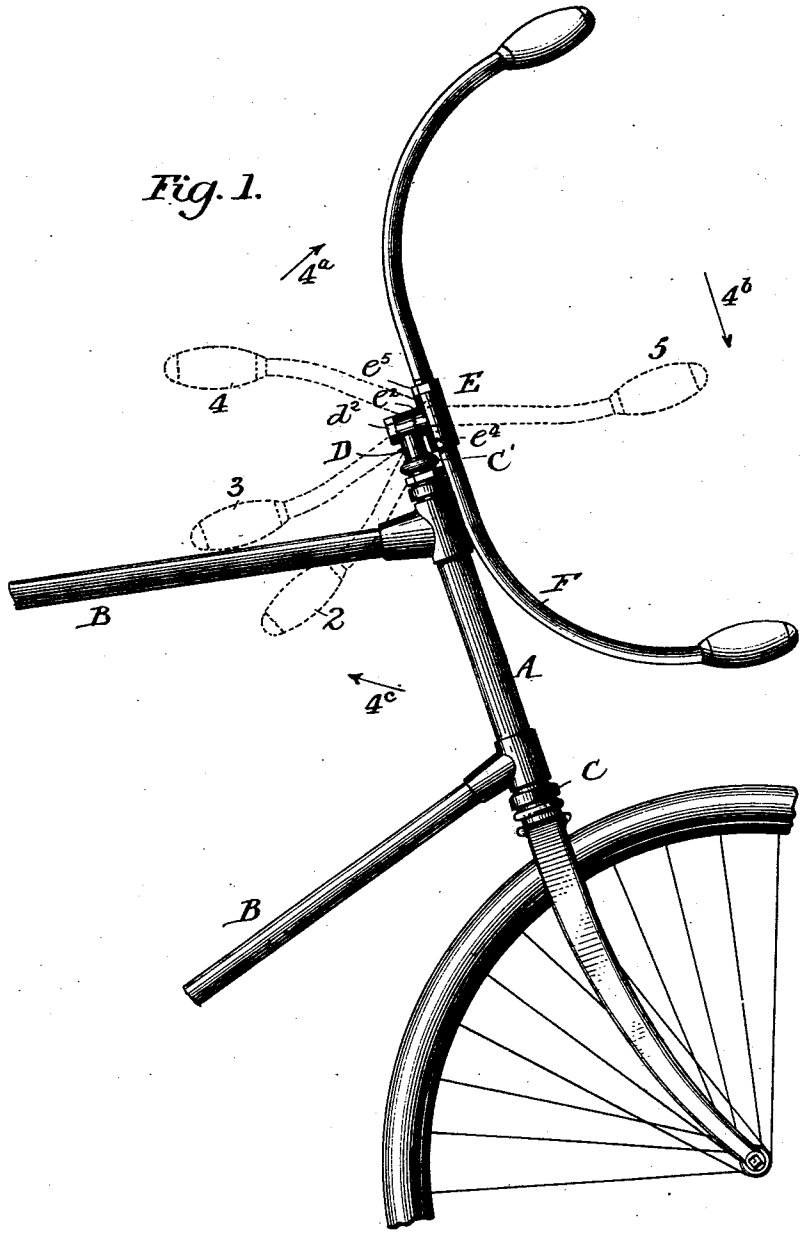

Witnesses
Jno. G. Hinkel
A. E. Hansmann.

Inventor
P. W. Stevens
by Foster Freeman
Attorneys

THE NORRIS PETERS CO., PHOTO-LITHO., WASHINGTON, D. C.

(No Model.) 3 Sheets—Sheet 2.

P. W. STEVENS.

HANDLE BAR FOR BICYCLES.

No. 564,848. Patented July 28, 1896.

Fig. 2.

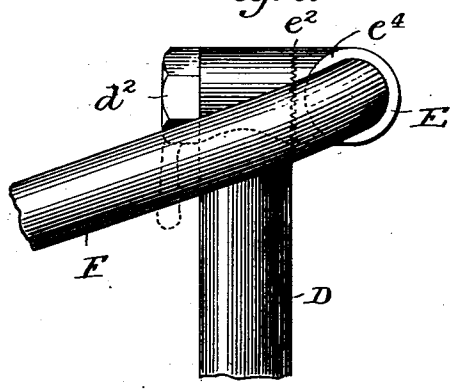

Fig. 3.

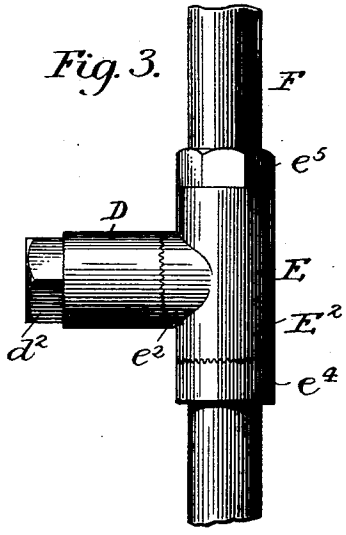

Fig. 4.

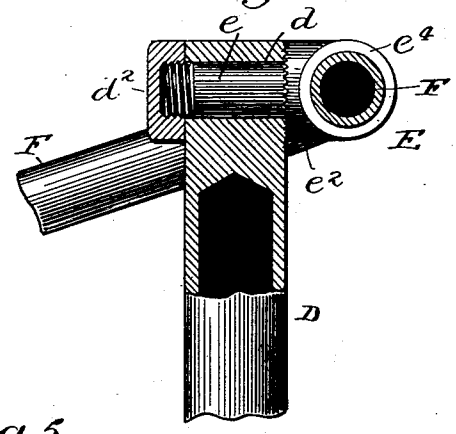

Fig. 5

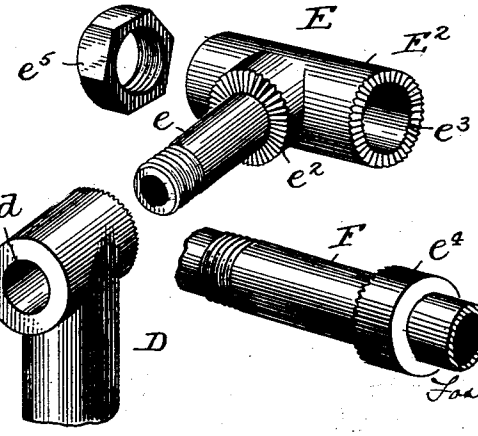

Witnesses
Jno. G. Hinkel
A. E. Hanmann.

Inventor
P. W. Stevens
by Foster Freeman
Attorneys

THE NORRIS PETERS CO., PHOTO-LITHO., WASHINGTON, D. C.

(No Model.) 3 Sheets—Sheet 3.

P. W. STEVENS.

HANDLE BAR FOR BICYCLES.

No. 564,848. Patented July 28, 1896.

Fig. 6.

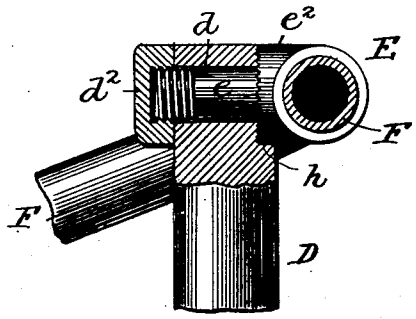

Fig. 7.

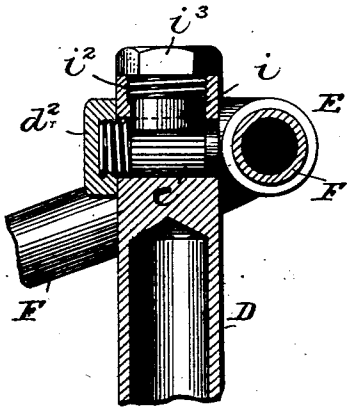

Fig. 8.

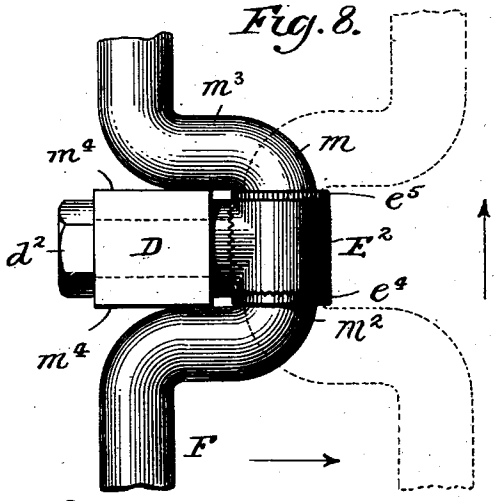

Fig 9.

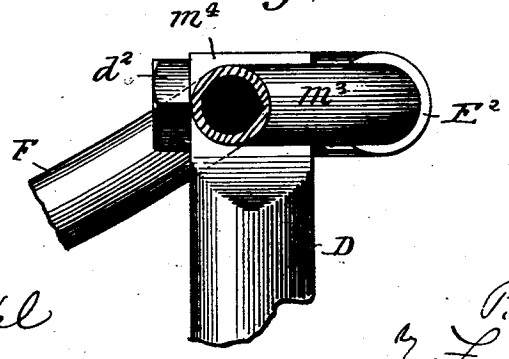

Witnesses
Jno G. Hinkel
A. E. Hansmann

Inventor
P. W. Stevens
by Foster Freeman
Attorneys

THE NORRIS PETERS CO., PHOTO-LITHO., WASHINGTON, D. C.

UNITED STATES PATENT OFFICE.

PAUL W. STEVENS, OF WASHINGTON, DISTRICT OF COLUMBIA, ASSIGNOR TO THE FENTON METALLIC MANUFACTURING COMPANY, OF JAMESTOWN, NEW YORK.

HANDLE-BAR FOR BICYCLES.

SPECIFICATION forming part of Letters Patent No. 564,848, dated July 28, 1896.

Application filed December 3, 1895. Serial No. 570,922. (No model.)

To all whom it may concern:

Be it known that I, PAUL W. STEVENS, a citizen of the United States, residing at Washington, in the District of Columbia, have invented certain new and useful Improvements in Handle-Bars for Bicycles, of which the following is a specification.

This invention relates to an improvement in adjustable handle-bars for bicycles and other vehicles, and it has for its object to provide a simple, cheap, and effective means whereby handle-bars may be readily and quickly adjusted and secured in different relative positions.

With these objects in view the invention consists in the novel construction and arrangement of the parts, substantially as hereinafter described.

In the accompanying drawings, forming a part of this specification, and in which like letters of reference indicate corresponding parts, Figure 1 is a side elevation of a portion of a bicycle with my invention applied thereto. Fig. 2 is an enlarged detail side view of the invention. Fig. 3 is a plan view. Fig. 4 is a vertical sectional elevation; Fig. 5, a perspective view of the parts disconnected; Fig. 6, a vertical sectional view of a modification. Fig. 7 is a similar view of another modification; Fig. 8, a plan view of still another modification, and Fig. 9 is a side elevation of the same.

In shipping or storing bicycles a great deal of space is necessarily required by reason of the projection of the handle-bars upon each side of the frame. This is obviated in the use of the present invention by arranging the handle-bars so that they may be brought to a vertical position in front of and in the same vertical plane with the head of the machine without necessitating their detachment therefrom.

It is, too, often found desirable to adjust the handles of a bicycle to suit the various positions assumed by the rider, or when two or more persons ride the same machine to alter the position of the handles to accommodate the length of the arms of the rider. If he assumes an upright position on the machine, the handles are elevated in order that they may be readily grasped without necessitating the bending of the body. When, however, it is desired to use the machine for racing, it is desirable to lower the handles that they may be grasped when the rider bends forward, which is the usual position assumed in racing. Whatever may be the position to which the handle-bar is adjusted, it is essential that it be held permanent and fixed and at the same time be capable of being quickly and easily released and adjusted to a different position; and my invention is intended to accomplish all of these results in a simple and inexpensive manner, as will appear from the following detailed description.

The head A of the bicycle may be of any desirable construction. As shown, it consists of a tube to which the bars B B of the frame are secured.

C is a tube connected to the front fork or yoke and adapted to rotate in the head A. Extending into the tube C is the stem D, upon which the support for the handle-bar is connected and adapted to rotate in the manner hereinafter set forth.

The handle-bar may be bent or formed into any of the usual forms and may be made of one, two, or more pieces, as is found desirable. I prefer, however, to make use of the handle-bar shown, which is formed of a single piece and is bent or curved in at least two different planes, that is to say, in addition to being bent or curved in a horizontal plane to bring the handles in convenient reach of the rider, it is also bent or curved in a vertical plane, which, whenever the handle-bar is turned or brought to the different positions hereinafter described, will give the handles thereof either an upward or a downward curve, as may be desired.

The stem D is connected to the tube C in any suitable manner in order that it may be adjusted vertically therein. In some instances the stem and tube C may be formed integral, that is to say, the tube C may be extended vertically above the head, and the opening *d*, which receives the shank of the handle-bar support E, may be formed in said tube. In this form of construction the stem is dispensed with. It will be understood, therefore, that by the use of the term "stem" I intend to comprehend the part D vertically adjustable in the tube C or the construction wherein the tube C is extended above the

head to receive the handle-bar support, as above described.

Any suitable means may be employed for holding the stem against upward and downward movement. Those shown constitute a simple means for effecting this and consist of a clamp C', surrounding the tube C and stem D. When this clamp is tightened, all movement of the stem is prevented.

The stem D is provided at or near its upper end with an opening d, which extends through the stem in the direction of movement of the machine. This opening d is adapted to receive a shank e of the handle-bar support E. The rear end of this shank projects beyond the stem D and is screw-threaded for reception of a clamp-nut d^2, which in its normal position bears against the rear of the stem D. In order to avoid the necessity of employing a wrench in turning the nut d^2, it may be provided with a handle or thumb-piece, as indicated in dotted lines, Fig. 2. Near its front end the stem is provided with a shoulder e^2 and at its extreme front end is formed a collar E^2, the opening e^3 in which extends transversely to that in the stem. This opening in the collar E^2 is adapted to receive the handle-bar F, which is designed to rotate therein and to be clamped against rotation. The means for effecting this will be described in detail farther on.

From the above it will be apparent that the handle-bar is supported in a different vertical plane from that occupied by the stem D, and the axis of its supporting means is at an angle to the axis of the said stem, in the present instance at right angles, although it will be readily understood that this angle may be varied by forming the opening d diagonally through the stem D. As an additional means of insuring the non-rotation of the shank e in the opening d, I have provided the face of the shoulder e^2 and the opposing face of the stem D with serrations which are caused to interlock when the clamp-nut d^2 is tightened. The above means constitute a simple form of clamp for the handle-bar support, although other means may be employed.

Various devices may also be used for holding the handle-bar F against movement in the collar E^2 of the support E. Those shown consist of a flange e^4 upon the handle-bar located at one side of the collar E^2 and provided at one side with serrations which take into corresponding serrations in one end of the collar. This interlocking of the serrations is effected by means of a nut e^5, located at the opposite end of the collar E^2, which travels upon a screw-threaded portion e^6 of the handle-bar. By employing this construction it is only necessary, when it is desired to rotate the handle-bar in its support E, to loosen the nut e^5 and shift the handle-bar laterally in the collar E^2 until the serrations are disengaged, when it may be elevated or lowered as required. As thus arranged, it will be seen that the handle-bar may be adjusted to any of the positions shown in Fig. 1 and designated 1, 2, 3, 4, and 5. It will be observed that in the position shown in full lines and designated by the numeral 1 the handle-bar is extended vertically parallel to the head and stem of the bicycle. This is a convenient position when it is desired to store or ship the machine, as a greater economy of space is attained than if the handle-bar projected to each side of the bicycle. In the position designated by the numerals 2 and 3 the handle-bar is curved upwardly. If, however, it should be desirable to have it curved downwardly, as in position 4, the nut e^5 is loosened and the handle-bar rotated in the collar E^2 in the direction of the arrow 4^a to bring it to the position indicated by the numeral 5. The clamp-nut d^2 is then loosened and the shank e s rotated for half a revolution in the stem D, ausing the handle-bar to swing in the direcion indicated by the arrow 4^b. The clamp-nut d^2 is then tightened and the handle-bar is rotated in the direction of the arrow 4^c and brought to the desired height, when it is secured by retightening the nut e^5. It will thus be seen that a complete reversal of the curve of the handle-bar is effected.

By removing the clamp-nut d^2 from the shank e the handle-bar and its support may be disengaged from the stem and removed within doors and the bicycle incapacitated for use until the handle-bar is once more attached to it, which may be quickly and easily effected.

In Fig. 6 the parts are identical in construction and operation with those in Figs. 1 to 5, except that the front of the stem D is provided with a recess h, which affords the shoulder e^2 of the handle-bar support E a more extensive bearing-surface.

As has hereinbefore been stated, various means may be employed for holding the handle-bar support E against rotation in the stem, and in Fig. 7 I have illustrated another means of accomplishing this. In the construction illustrated by this figure the shank e is provided around its periphery with serrations with which a corresponding serrated key i interlocks. This key is inserted through an opening i^2, which extends from the top of the stem and intersects the opening d, and is held in contact with the shank e by means of a nut i^3, which screws into said opening i^2.

In the constructions illustrated in Figs. 1 to 7 the handle-bar is shown as extending laterally from a support in a vertical plane in advance of that occupied by the stem D. It may, however, be formed to extend laterally from opposite sides of the stem or in the same vertical plane assumed thereby by forming it with a central crank m, as indicated in Figs. 8 and 9. The central portion m^2 of this crank is supported in the collar E^2, and its parallel portions m^3 extend upon opposite sides of the stem D. These sides are preferably flattened at m^4 in order to form a bearing for the portions m^3 of the handle-bar.

In all other particulars the parts in these figures are identical with those illustrated in Figs. 1 to 7.

Without limiting myself to the exact construction hereinbefore shown and described, what I claim is—

1. In a bicycle, the combination with the head, of a stem, a support adapted to rotate on an axis which is at an angle to the axis of the stem, means for securing the support after adjustment, a bent handle-bar rotatively mounted in the support, and devices for holding the handle-bar after adjustment, substantially as described.

2. In a bicycle, the combination with the head, of a stem, a support, adapted to rotate on an axis which is at an angle to the axis of the stem, means for clamping the support after adjustment, a handle-bar bent in two planes rotatively mounted in the support and devices for holding the handle-bar against movement after adjustment, substantially as described.

In testimony whereof I have signed my name to this specification in the presence of two subscribing witnesses.

PAUL W. STEVENS.

Witnesses:
J. J. McCARTHY,
L. A. FAIGRIEVE.