March 16, 1948. H. R. SUTPHEN 2,438,078

COLLAPSIBLE GOLF CART

Filed Aug. 14, 1944 4 Sheets-Sheet 1

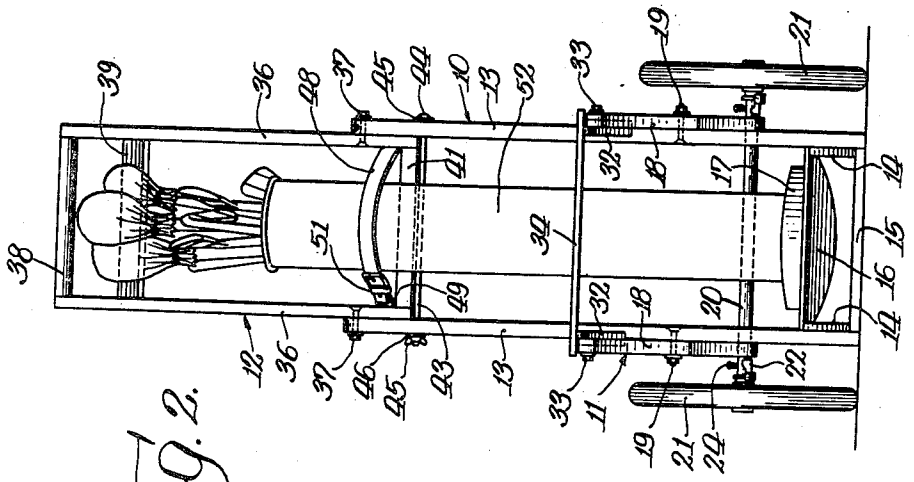

Fig. 2.

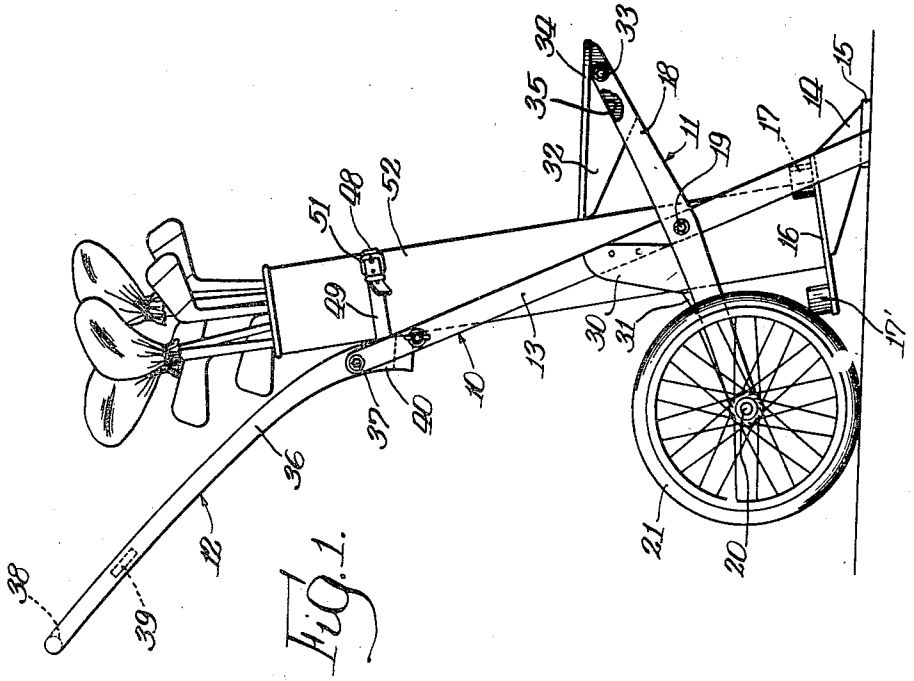

Fig. 1.

INVENTOR.
Henry R. Sutphen
BY
Brown, Jackson, Boettcher, Dienner
Atty's.

March 16, 1948. H. R. SUTPHEN 2,438,078

COLLAPSIBLE GOLF CART

Filed Aug. 14, 1944 4 Sheets-Sheet 2

Fig. 3.

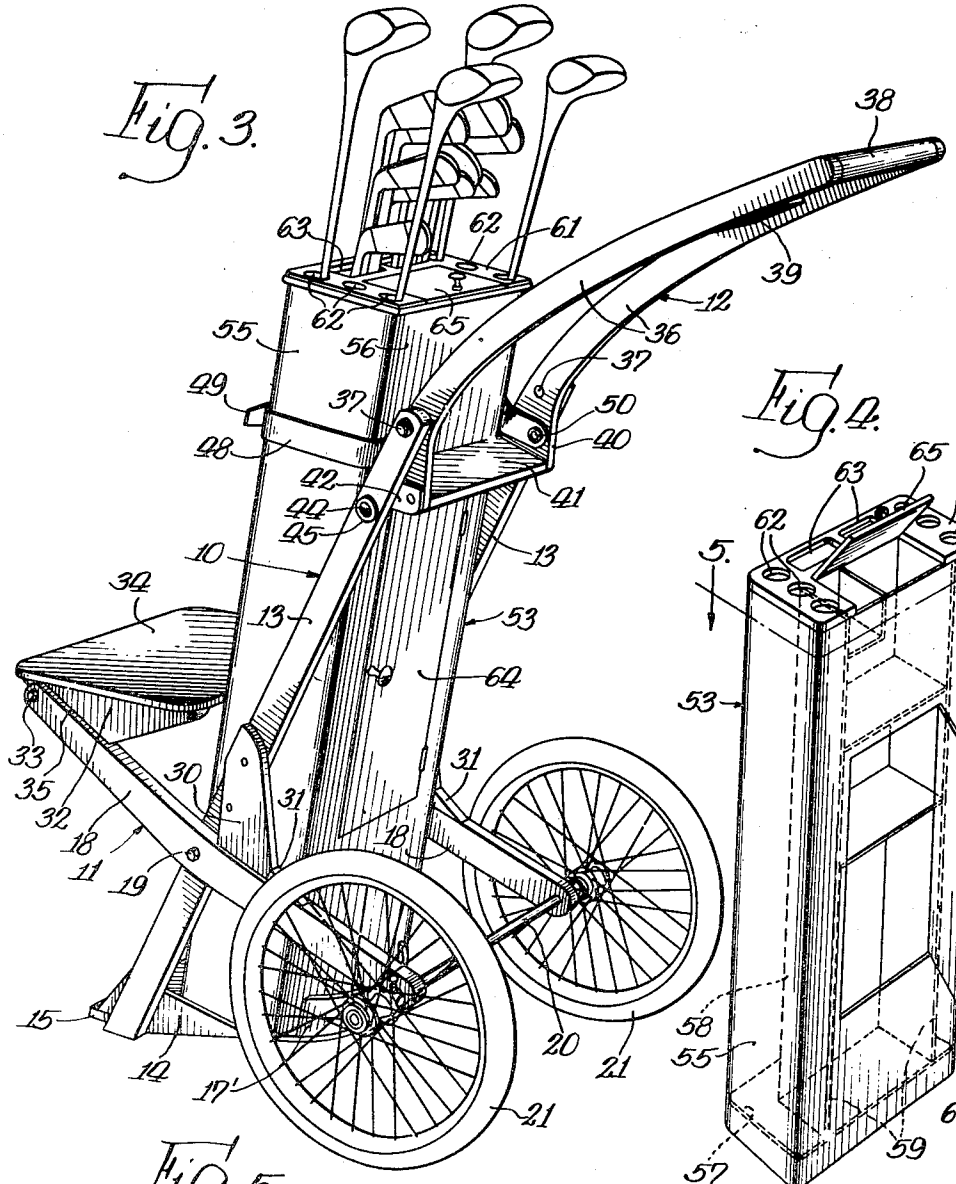


Fig. 4.




Fig. 5.

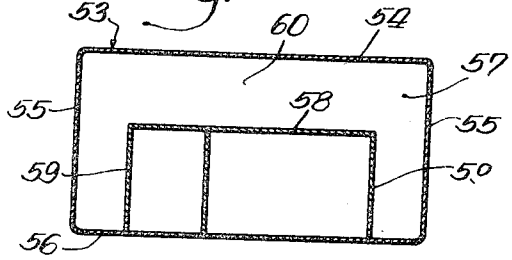


INVENTOR.
Henry R. Sutphen,
BY
Brown, Jackson, Boettcher & Dienner
Attys.

March 16, 1948. H. R. SUTPHEN 2,438,078

COLLAPSIBLE GOLF CART

Filed Aug. 14, 1944 4 Sheets-Sheet 3

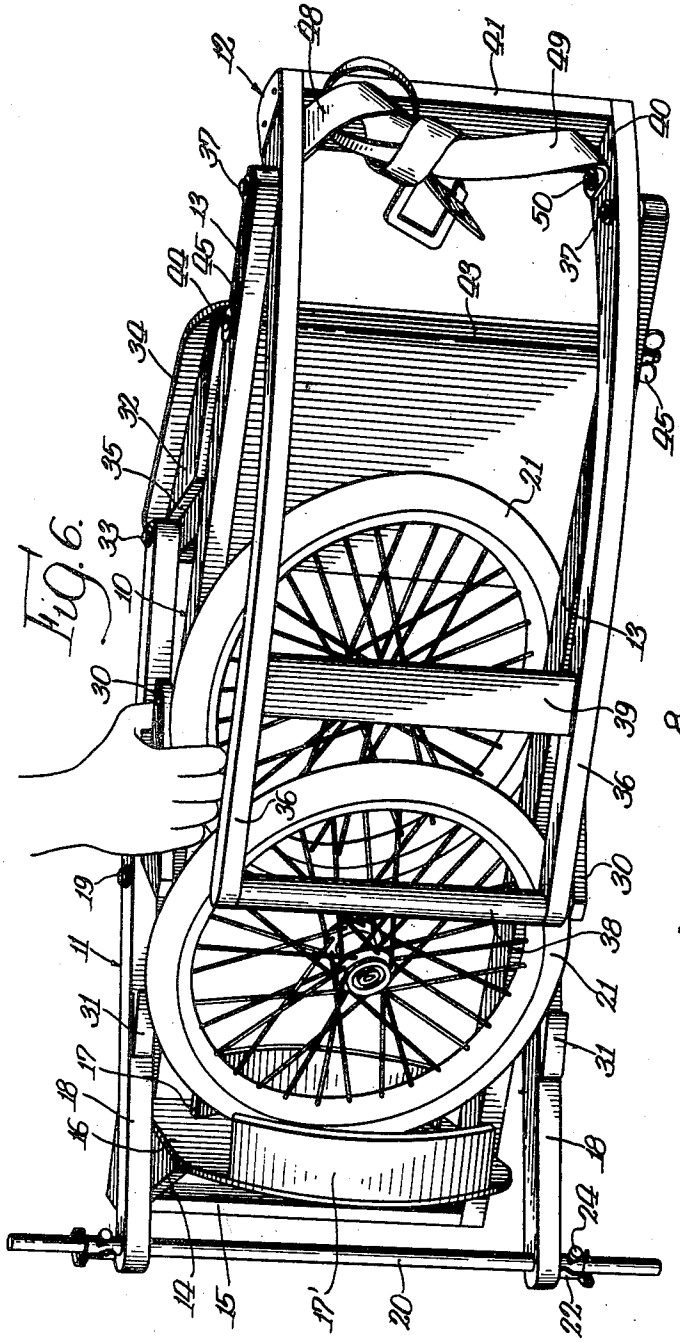

Fig. 6.

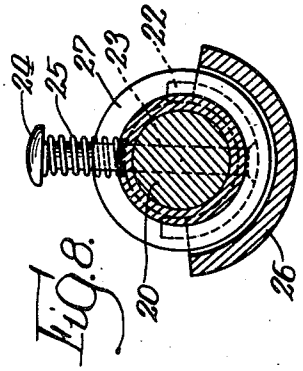

Fig. 8.

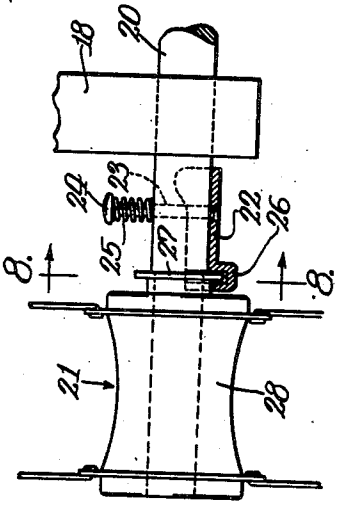

Fig. 7.

INVENTOR.
Henry R. Sutphen,
BY
Brown, Jackson, Boettcher & Dienner
Atty's.

March 16, 1948. H. R. SUTPHEN 2,438,078

COLLAPSIBLE GOLF CART

Filed Aug. 14, 1944 4 Sheets-Sheet 4

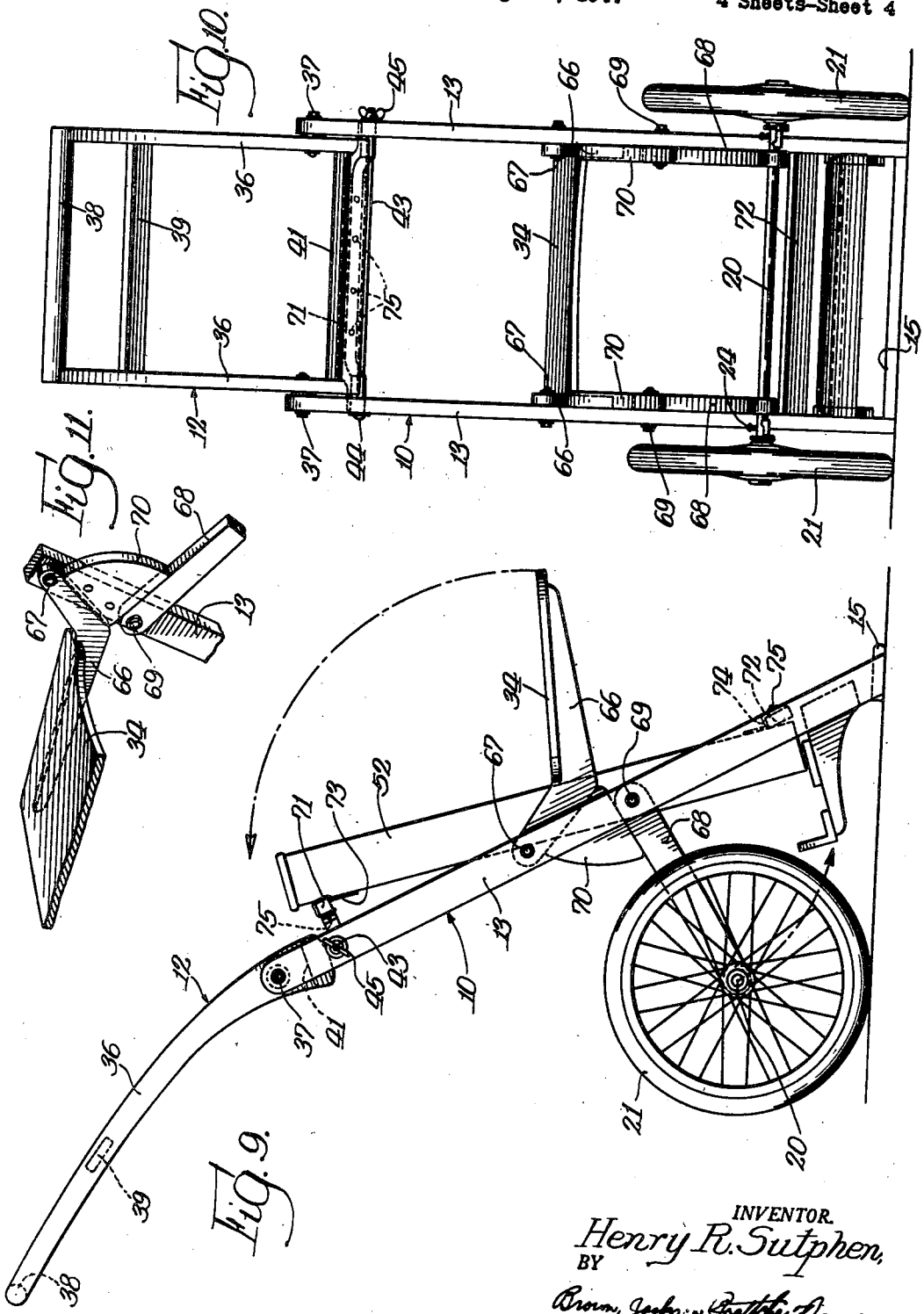


INVENTOR.
Henry R. Sutphen,
BY
Brown, Jackson, Boettcher & Dienner
Atty's.

Patented Mar. 16, 1948

2,438,078

# UNITED STATES PATENT OFFICE

2,438,078

## COLLAPSIBLE GOLF CART

Henry R. Sutphen, New York, N. Y.

Application August 14, 1944, Serial No. 549,421

7 Claims. (Cl. 280—36)

1

This invention relates to golf carts, i. e. carts for transporting golf clubs and other equipment over a golf course in playing the game.

My invention is directed to the provision of such a cart which, at the same time, provides a seat for rest during opponents' play, which is of light weight, constructable mainly of wood, and which, when out of use, is readily collapsible for easy carrying, for stowage in the luggage compartment of an automobile, and for storing. Moreover, the golf cart of my invention is so constructed as to provide adjustability to dispose the center of gravity of the load to best advantage for facilitating travel of the cart, and other subsidiary features which will be made point of as this description proceeds. I also provide an improved golf club container, particularly adapted for use with the cart, and possessing certain advantages over the usual golf bag, as will hereinafter be more fully explained.

In the accompanying drawings:

Figure 1 is a side elevational view of a cart embodying the primary features of my invention, shown as used for transporting an ordinary bag of golf clubs;

Figure 2 is a front elevational view thereof;

Figure 3 is a perspective view of the same cart, taken from a rear angle and on a somewhat larger scale, and showing the improved golf club container of my invention mounted thereon;

Figure 4 is a perspective view of the golf club container shown in Figure 3, taken from approximately the same angle;

Figure 5 is a horizontal sectional view of the golf club container shown in Figures 3 and 4, taken on the plane indicated by the line 5—5 of Figure 4;

Figure 6 is a perspective view of the cart in its collapsed condition;

Figure 7 is a fragmentary detail view of the hub of one of the wheels and the means for removably mounting the same upon the axle;

Figure 8 is a cross-sectional view taken on the plane of line 8—8 of Figure 7;

Figure 9 is a view similar to Figure 1, but illustrating two added features;

Figure 10 is a rear elevational view of the assembly shown in Figure 9; and

Figure 11 is a detail perspective view of the modified seat mounting of Figures 9 and 10.

Referring first to Figures 1 and 2:

I have shown the cart of my invention, by way of example, as comprising a main frame 10, a wheel and seat frame 11, and a handle frame 12. The main frame 10 comprises parallel upright

2

side bars 13, preferably of wood, to the inner face of each of which, adjacent its lower end, is secured a block 14. A cross member 15, formed of a board of substantial width and fitting between the lower ends of bars 13, 13, is secured to the lower ends of the blocks 14, 14, with its flat under face substantially flush with the lower ends of the bars 13, 13. A platform 16, also preferably of wood, is secured upon the upper ends of the blocks 14, 14, and extends rearward beyond bars 13, 13, the forward portion of platform 16 fitting between bars 13. Two opposed upstanding arcuate flanges or rims 17, 17', also preferably of wood, are secured to platform 16 on the upper face of the platform 16 adjacent the front and the rear thereof, respectively, for reception between them of the lower end of a golf bag resting upon the platform, as will be seen more fully presently.

The wheel and seat frame 11 is also constructed of wood and comprises two parallel side bars 18, 18, which straddle the side bars 13, 13 of main frame 10 and are pivoted thereto, at about mid-length, by means of the pivot pins 19, 19. An axle 20, preferably of steel, is suitably mounted through the side bars 18, 18, adjacent the rearward ends thereof, with its end portions projecting laterally outward therebeyond. Rubber tired wheels 21, 21 of ordinary construction, are mounted upon the projecting end portions of shaft 20, upon which they are retained by means permitting ready demounting thereof, as shown in Figures 7 and 8. An arcuate retainer 22, shaped to fit about the lower portion of axle 20, is secured upon the lower end of a pin 23, passing through a corresponding cross opening in the axle and having at its upper end a head 24, between which and axle 20 a compression spring 25 is disposed. Spring 25 normally holds member 22 in its raised position, with its channel element 26, at its outer end, engaging about flange 27 on hub 28 of the wheel 21. It will be seen that the wheel 21 is thus retained upon axle 20, while permitting free rotation thereof, and that by depressing pin 23, and with it member 22, the channel element 26 is moved downward to clear the flange 27, permitting ready removal of the wheel from the axle.

A block 30 is secured to the outer face of each of the side bars 13 of main frame 10, these blocks having their lower ends disposed for contact by the upper edges of side bars 18, 18, of the wheel and seat frame 11, when the cart is set up as shown in Figures 1, 2 and 3. Preferably, small blocks 31, 31, are secured upon the upper edges

of bars 18, 18, disposed to contact the lower rearward corners of blocks 30, 30, for further reinforcing the frame structure and taking up fore-and-aft thrust.

Blocks 32, 32, of triangular shape, are disposed at the inner sides of the side bars 18, adjacent the upper or forward ends thereof, each of these blocks being pivoted to its bar 18 by nut-and-bolt means 33 and extending rearwardly therefrom. A wood seat 34 is secured to the upper edges of the blocks 32, 32, the latter being cut away or rabbeted at the lower portion of their outer faces to provide stop shoulders 35, 35, which rest upon the inner portions of the upper edges of bars 18, 18, when the cart is set up with the seat 34 in position as shown in Figures 1, 2 and 3. With the cart resting on the rubber-tired wheels and the cross member 15, the seat is at proper height for a person to sit thereon, and, lying directly over the cross member, is in stable position. The cross member also forms a convenient foot rest, and prevents digging into the turf by the lower ends of the bars 13, 13.

The handle structure 12 is in the form of a rectangular frame comprising side bars 36, 36, fitting at their lower end portions between the upper end portions of the side bars 13, 13 of frame 10, and pivoted to the latter bars, at the upper ends thereof, by bolt-and-nut means 37, 37, located a short distance above the lower ends of bars 36, 36. A handle rod 38 is secured between bars 36, 36 at the upper ends thereof, and a cross brace, in the form of a flat bar 39, is secured between bars 36, 36, a short distance below the handle rod 38. The side bars 36 are of increased width at their lower end portions, as at 40, and receive, between their lower ends, a cross bar 41 suitably secured thereto. A contact plate 42 is secured to the outer face of each bar 36 at the lower end thereof. A steel rod 43 passes through the side bars 13, 13 of the main frame, near the lower end of the handle structure 12, this rod having at one end a head 44, seating on a washer 45 contacting the outer face of one of the bars 13, and projecting at its other end outwardly beyond the other bar 13, being there threaded for the reception of a wing clamping nut 45 bearing on a washer 46 contacting the outer face of the bar 13. It will be seen that, when the clamping nut is loose, the handle frame 12 may be adjusted to any desired angle relative to the main frame 10, and that, by tightening the clamping nut the two frames may be locked in any desired relative position, for the purpose of bringing the handle 38 to preferred height and of balancing the cart when resting alone on the wheels, to best advantage dependent upon the load.

Straps 48 and 49 are suitably secured at their ends, as at 50, to the lower end portions 40 of bars 36, 36, of the handle frame, these straps being adapted to be buckled, as at 51, about a golf bag 52 resting obliquely against the cross bar 41 and standing at its lower end upon the platform 16 between the flanges or rims 17, 17'. Depending upon the player, there may be few or many clubs in the bag, and, by adjusting the handle frame 12 about its pivots, as before described, the bag and its contents may be tilted to the angle which will dispose the center of gravity of the load to best advantage so as to assure ease in handling of the cart. The golf bag, thus strapped in place, may also be used as a back rest.

In Figures 3, 4 and 5, I have shown a golf club container 53, of rigid construction, substituted for the bag 52 of Figure 1. This container 53 may be constructed of any suitable light material, preferably plywood, and is of generally prismatic shape, comprising front wall 54, side walls 55, 55, back wall 56, and bottom 57. Within the container 53, vertical partition walls 58 and 59, 59, respectively, extend from the bottom 57 to the top, defining, within the container, compartment space at the middle rear and a substantially U-shaped surrounding space 60. A top plate 61, of substantially U-shape, is suitably secured to the upper end of the container in overlying relation to space 60 thereof, and is provided adjacent each side with a series of openings 62, 62, and in its forward portion with two openings 63, 63 of oblong shape. The openings 62 receive the shafts of the wood clubs and the openings 63 receive the shafts of the shorter iron clubs, the club shafts extending downward within space 60 and resting upon bottom 57 of the container. In that manner, the heads of the woods are supported out of contact with each other and with the heads of the irons and, if desired, the usual mittens for the woods may here be omitted. The partition space within the walls 58 and 59, 59 may be separated by vertical and horizontal partitions into compartments for reception of golfing accessories, access to such compartments being provided by a door 64, hinged to back wall 56, and a cover 65 hinged at its forward edge to top plate 61.

I have described the cart of my invention so far with reference to its use in its set up condition. When not in use, the cart may readily be folded for transport or storage. In folding the cart, after removal of the golf club bag or container, the seat 34, with its blocks 32, is swung upward and forward, about pivot 33, and frame 11 is then turned counter-clockwise (as viewed in Figure 1) about its pivots 19 toward parallelism with the main frame 10, with axle 20 disposed beneath platform 16, and seat 34 extending upward alongside frame 10. The handle structure 12 is then turned downward and rearward about its pivots 37, into position alongside main frame 10, in which position it may be locked by the wing nut 45. Folded in this manner, the cart presents a compact bundle which may readily be carried by hand, or, if desired, may be wheeled on the wheels 21, the cross bar 41 then being positioned to serve as a handle; if desired, the wheels 21 may be removed from the axle 20, in the manner previously described, and disposed in the folded cart; all as shown in Figure 6.

Referring now to Figures 9, 10 and 11, into which the reference characters of the preceding figures are carried over so far as may be:

The chief modification illustrated in these further figures lies in separately pivoting the seat supporting means and the wheel supporting means. In this instance the seat 34 is fixed on two arms 66, 66, mounted upon the respective side bars 13, 13 by means of the coaxial pivots 67, 67. The wheel frame comprises the two arms 68, 68 mounted upon the respective side bars 13, 13 by means of the coaxial pivots 69, 69, these latter pivots being distanced down from the pivots 67, 67. The axle 20 is mounted in the lower ends of these arms 68, 68, in the same manner that the axle 20 is mounted in the lower ends of the bars 18, 18, of the previous figure. The arms 66, 66 are shaped to an angle, as illustrated in Figures 9 and 11, and triangular blocks 70, 7

are secured, respectively, to the side bars 13, 13, as shown, so as to be operatively engaged, at their lower edges, by the arms 68, 68, and, at their upper edges, by the arms 66, 66. This enables the wheel frame to be swung downwardly to collapse the cart, independently of the seat frame, and enables the seat frame to be swung, independently of the wheel frame, and while the cart is in operative condition, upwardly against the golf bag or container in the event that use of the seat is not desired.

These further Figures 9, 10 and 11 also show another feature, in the provision of means for holding the golf bag 52 in place on the cart. The main frame 10 is provided with cross pieces 71 and 72, near the top and bottom, respectively, and the golf bag is provided with a flap 73 on its rear side near the top and a flap 74 on its front side near the bottom, which flaps can be secured to the cross pieces 71 and 72, respectively, by means of snaps 75, 75.

It will be seen that the cart of my invention is of such character that it may be constructed mainly of wood, with a view to lightweight, while possessing adequate mechanical strength, though it will be understood that it may be constructed of any suitable material. It will also be understood that the precise construction which I have described in detail is set forth as an example and that changes in such details may be made without departing from the spirit and scope of my invention as set forth in the appended claims.

I claim:

1. In a golf cart, a wheeled structure including a downwardly and forwardly inclined main frame, a platform carried by said main frame at its lower end, adapted to receive the bottom of a golf club container, a handle frame pivoted to said main frame adjacent the upper end thereof adjustable to various desired positions about its pivot axis in the use of said cart, a cross member on said handle frame adjustable therewith disposed to contact a golf club container resting on said platform, for adjusting the center of gravity of the load, and means for locking said handle frame in adjustment about its pivot axis.

2. In a golf cart, a wheeled structure including a downwardly and forwardly inclined main frame, a platform carried by said main frame at its lower end, adapted to receive the bottom of a golf club container, a handle frame pivoted to said main frame adjacent the upper end thereof, a cross member on said handle frame, below its pivot axis, disposed to contact a golf club container resting on said platform, for adjusting the center of gravity of the load, and means for locking said handle frame in adjustment about its pivot axis.

3. In a golf cart, a structure comprising a downwardly and forwardly inclined main frame and an upwardly and forwardly inclined seat frame disposed in straddling relation to and projecting forwardly of said main frame, means connecting said frames and restraining said seat frame against downward movement at its forward end relative to said main frame, ground wheels carried by one of said frames rearward thereof, a seat carried by said seat frame at the forward end thereof, overlying the lower end of said main frame, a platform on said main frame at its lower end, adapted to receive the bottom of a golf club container, a handle frame pivoted to said main frame adjacent the upper end thereof, a cross member on said handle frame disposed to contact a golf club container resting on said platform, for adjusting the center of gravity of the load, and means for locking said handle frame in adjustment about its pivot axis.



4. In a golf cart, a structure comprising a main frame and a seat frame disposed in straddling relation, pivoted together intermediate their ends on a transverse horizontal axis, stop means restraining turning of said seat frame relative to said main frame in either direction beyond either of two positions, one an operating position extending forwardly and rearwardly beyond said main frame at an upward and forward inclination thereto and the other a folded position alongside said main frame, removable ground wheels carried by said seat frame at the rearward end thereof, a seat pivoted to the forward end of said seat frame, movable relative thereto into a substantially horizontal operative position and into a folded position alongside said main frame, a platform carried by said main frame at the lower end thereof, and a handle structure attached to the upper end of said main frame.

5. In a golf cart, a structure comprising a main frame having side bars and a seat frame having side bars straddling and pivoted intermediate their ends to the side bars of said main frame intermediate the ends of the latter bars, stop means limiting pivotal movement of said frames to unfolded operative positions and folded inoperative positions, said frames in their latter positions being substantially parallel and in their operative positions being disposed with said main frame at a downward and forward inclination and said seat frame at an upward and forward inclination, removable ground wheels mounted on said seat frame at the rearward end thereof, a seat pivoted to the forward end of said seat frame, movable relative thereto into a substantially horizontal operative position overlying the forward end of said main frame and into a folded position substantially parallel with said main frame, stop means restraining pivotal movement of said seat beyond its operative position, a flat ground contacting member of considerable area extending between the forward ends of the bars of said main frame, and a handle structure attached to the upper end of said main frame.

6. In a golf cart, a structure comprising a main frame having side bars and a seat frame having side bars straddling and pivoted intermediate their ends to the side bars of said main frame intermediate the ends of the latter bars, stop means limiting pivotal movement of said frames to unfold operative positions and folded inoperative positions, said frames in their latter positions being substantially parallel and in their operative positions being disposed with said main frame at a downward and forward inclination and said seat frame at an upward and forward inclination, ground wheels mounted on said seat frame at the rearward end thereof, a seat pivoted to the forward end of said seat frame movable relative thereto into a substantially horizontal operative position overlying the forward end of said main frame and in to a folded position substantially parallel with said main frame, stop means restraining piovtal movement of said seat beyond its operative position, said seat being disposed for contact with the side bars of said seat frame for straining pivotal movement of said seat beyond its folded position, a flat ground contacting member of considerable area extending between the forward ends of the bars of said main frame, and a handle structure attached to the upper end of said main frame.

7. In a golf cart, a structure comprising a main frame having side bars and a seat frame having side bars straddling and pivoted intermediate their ends to the side bars of said main frame intermediate the ends of the latter bars, stop means limiting pivotal movement of said frames to unfolded operative positions and folded inoperative positions, said frames in their latter positions being substantially parallel and in their operative positions being disposed with said main frame at a downward and forward inclination and said seat frame at an upward and forward inclination, ground wheels mounted on said seat frame at the rearward end thereof, a seat pivoted to the forward end of said seat frame movable relative thereto into a substantially horizontal operative position overlying the forward end of said main frame and into a folded position substantially parallel with said main frame, stop means restraining pivotal movement of said seat beyond its operative position, a flat ground contacting member of considerable area extending between the forward ends of the bars of said main frame, a platform carried by and extending rearward of said main frame above said ground contacting member for supporting the lower end of a golf club container, a handle frame comprising side bars extending between and pivoted to the side bars of said main frame adjacent the upper end thereof, a cross bar on said handle frame below its pivot axis, disposed to contact a golf club container resting on said platform for adjusting the center of gravity of the load, and means for locking said handle frame in adjustment about its pivot axis.



HENRY R. SUTPHEN.


REFERENCES CITED

The following references are of record in the file of this patent:

UNITED STATES PATENTS

| Number | Name | Date |
|---|---|---|
| 642,210 | Deutesfeld | Jan. 30, 1900 |
| 1,482,146 | Pomilio | Jan. 29, 1924 |
| 1,718,962 | Kimball | July 2, 1929 |
| 1,855,567 | Brown | Apr. 26, 1932 |
| 1,956,008 | Deibel | Apr. 24, 1934 |
| 1,960,862 | Baldwin | May 29, 1934 |
| 2,003,733 | Bishop | June 4, 1935 |
| 2,061,623 | Guy | Nov. 24, 1936 |
| 2,073,114 | Martin et al. | Mar. 9, 1937 |
| 2,210,632 | Perrill | Aug. 6, 1940 |
| 2,236,053 | Caron | Mar. 25, 1941 |
| 2,326,482 | Moffitt | Aug. 10, 1943 |
| 2,335,579 | Chamberlin et al. | Nov. 30, 1943 |
| 2,359,870 | Moreland | Oct. 10, 1944 |

FOREIGN PATENTS

| Number | Country | Date |
|---|---|---|
| 335,942 | France | Dec. 22, 1903 |
| 418,701 | Great Britain | Oct. 30, 1934 |