US 20070292249A1

(19) United States

(12) Patent Application Publication

(10) Pub. No.: US 2007/0292249 A1

(43) Pub. Date: Dec. 20, 2007

Wilson

(54) COMPACT SYSTEM FOR LIFTING AND MOVING PRESSURIZED TANK

(75) Inventor: **Michael Wilson**, Winnsboro, TX (US)

Correspondence Address:
CARSTENS & CAHOON, LLP
P O BOX 802334
DALLAS, TX 75380

(73) Assignee: **Itec Manufacturing, Ltd**, Winnsboro, TX (US)

(21) Appl. No.: **11/424,184**

(22) Filed: **Jun. 14, 2006**

Publication Classification

(51) **Int. Cl.**
B62B 1/06 (2006.01)

(52) **U.S. Cl.** **414/444**

(57) **ABSTRACT**

A hoist with a cradle for coupling with a pressurized tank. A primary means of restraining the tank on the cradle is provided along with a backup means should the primary means fail for any reason. A linear actuator assembly raises the cradle up to 27 inches from the floor surface. An onboard battery with an integrated battery charger provides power to the linear actuator. A compact base with swivel casters allows a raised tank to be safely lifted and transported by a single operator. The compact size of the hoist allows it to operate in confined spaces.

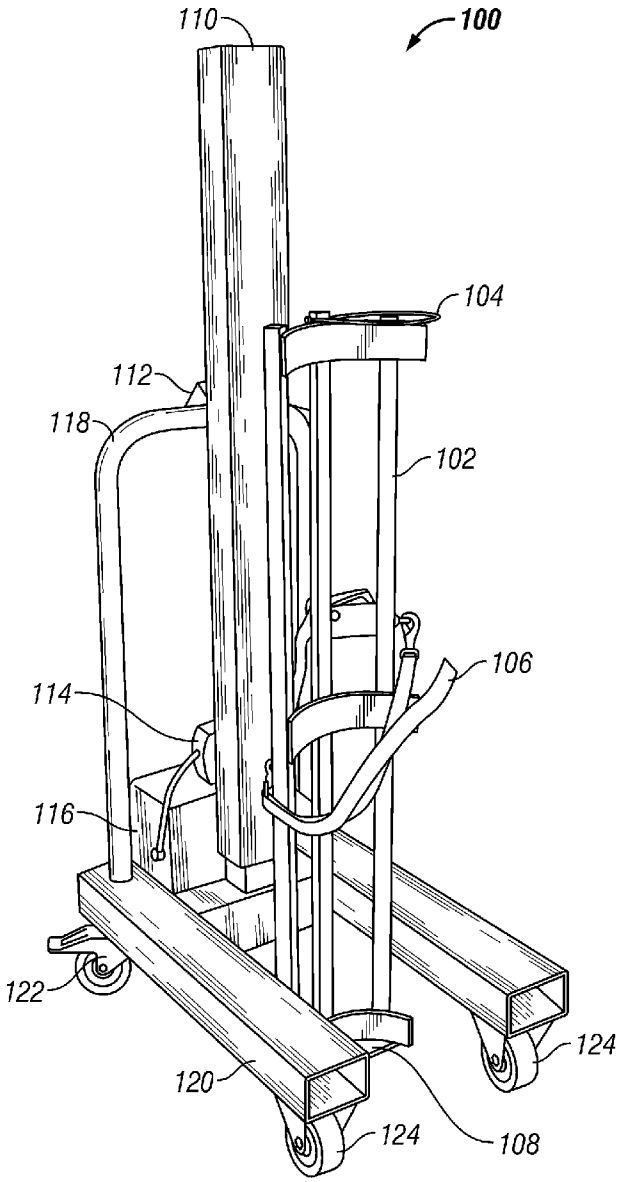

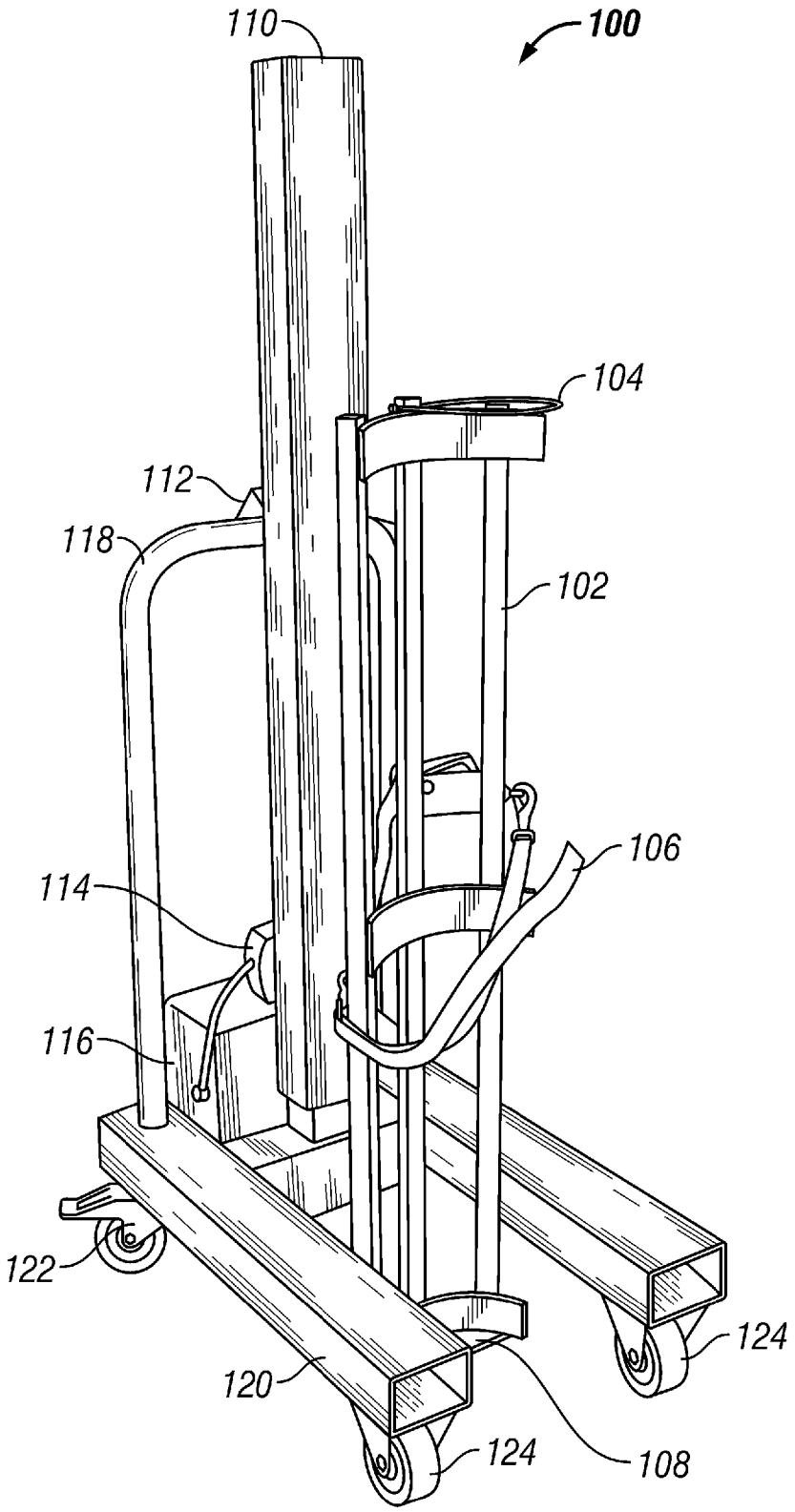

FIG. 1

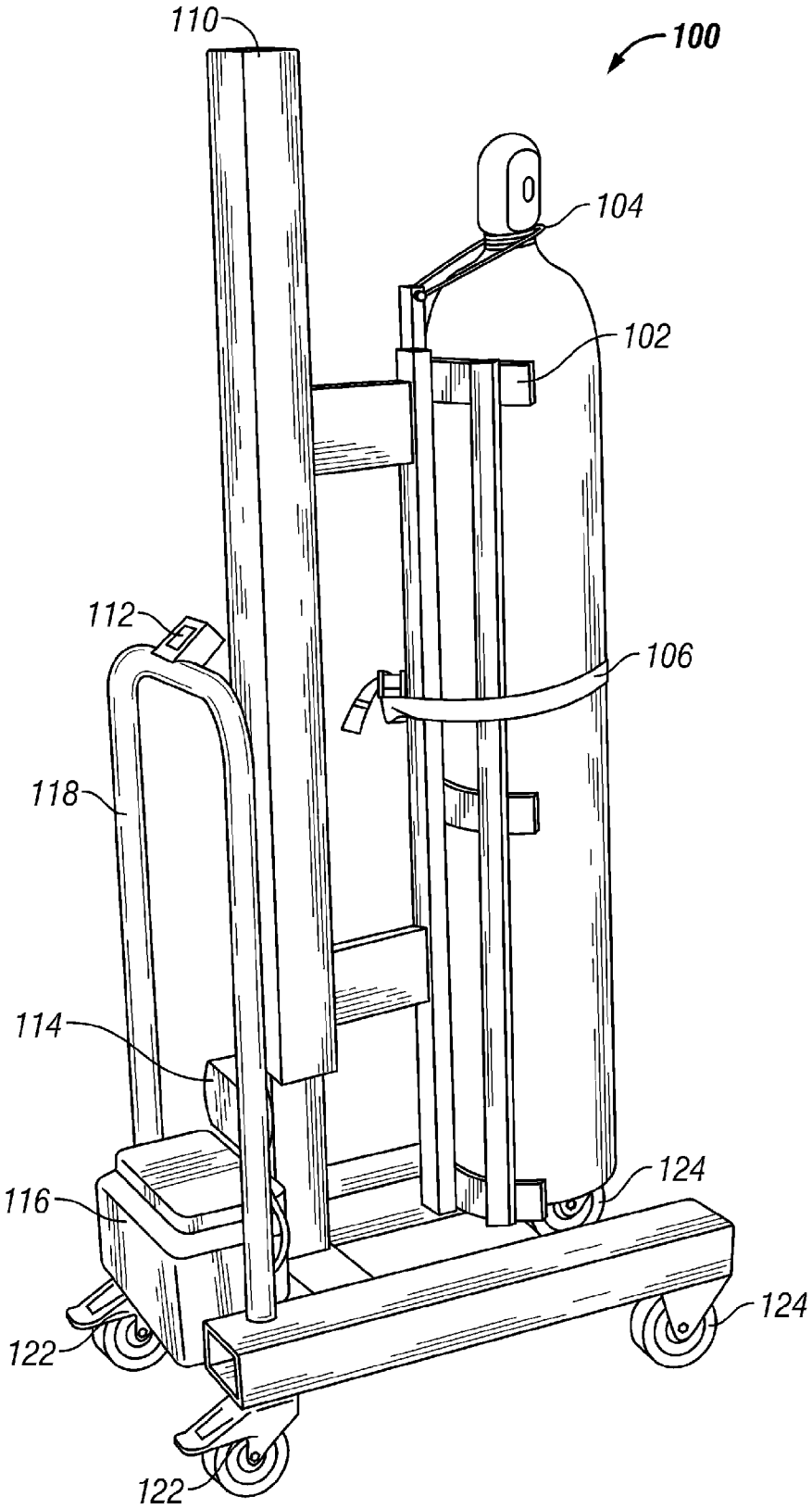

FIG. 2

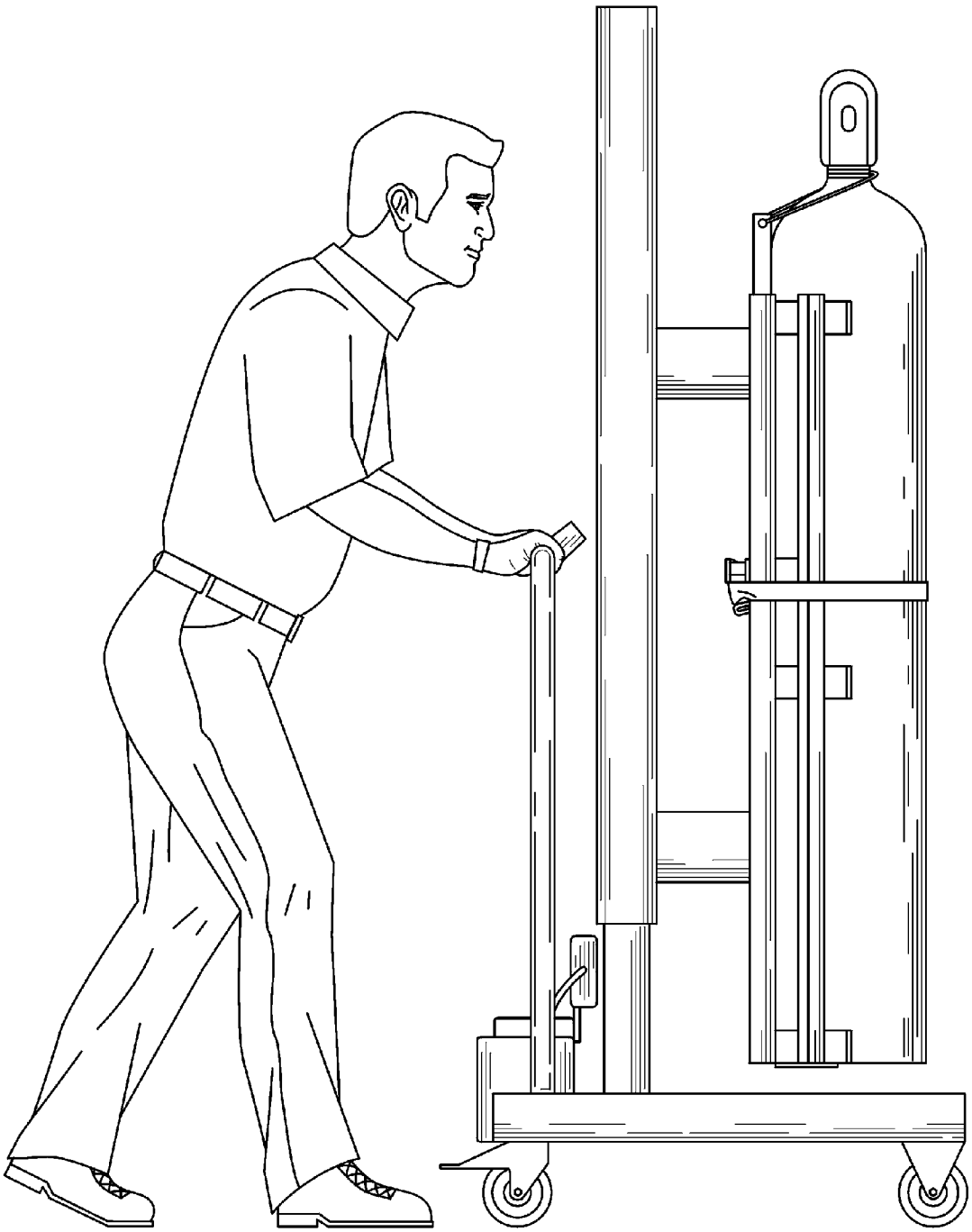

FIG. 3

COMPACT SYSTEM FOR LIFTING AND MOVING PRESSURIZED TANK

CROSS-REFERENCES TO RELATED APPLICATIONS

[0001] Not Applicable

STATEMENT REGARDING FEDERALLY SPONSORED RESEARCH OR DEVELOPMENT

[0002] Not Applicable

THE NAMES OF THE PARTIES TO A JOINT RESEARCH AGREEMENT

[0003] Not Applicable

INCORPORATION-BY-REFERENCE OF MATERIAL SUBMITTED ON A COMPACT DISC

[0004] Not Applicable

BACKGROUND OF THE INVENTION

[0005] 1. Field of the Invention

[0006] The present invention relates generally to an apparatus for lifting and moving pressurized tanks and more particularly relates to a compact apparatus for lifting and moving heavy pressurized oxygen tanks to assist in their installation in and removal from EMS response vehicles.

[0007] 2. Description of Related Art

[0008] Pressurized oxygen cylinders are standard equipment onboard most ambulances and other EMS response vehicles. Most of the pressurized cylinders used are made from either aluminum or steel. Though a lightweight material, an empty aluminum pressurized oxygen cylinder can weigh over one hundred pounds. Steel cylinders are heavier yet.

[0009] The Occupational Safety and Health Administration (OSHA) does not have a standard which sets limits on how much a person may lift or carry. However, a sister agency, the National Institute for Occupational Safety and Health (NIOSH), has developed a mathematical model which helps predict the risk of injury based on the weight being lifted and accounts for many confounding factors. The model is based on previous medical research into the compressive forces needed to cause damage to bones and ligaments of the back.

[0010] NIOSH has shown through research that a lifting index greater than 3.0 can clearly be linked to an increased risk of back and other injuries. In applying the NIOSH equation for calculating a lifting index, an EMS worker lifting a one hundred pound pressurized oxygen tank from the floor and stowing it in a compartment of an ambulance would likely encounter a lifting index of 3.9 or higher. A heavier tank would increase this number even more. Because of this, a single EMS worker attempting to lift and move such a cylinder faces a significant risk of back injury.

[0011] Cylinder storage compartments onboard EMS vehicles tend to be quite small, some barely larger than the cylinders themselves. These cramped spaces further compound the dangers faced by an EMS worker faced with the task of changing out cylinders. Because the spaces are so small, only one worker can realistically fit within the compartment to manipulate the cylinders.

[0012] Potential back injury is not the only possible hazard associated with pressurized tanks. The cylindrical shape makes them difficult to grasp and awkward to handle by a single person. However, due to the cramped compartment in which they are stored, only one person can realistically be expected to handle the cylinders. Thus, a real danger exists that a pressurized cylinder being handled could fall from a vehicle unexpectedly. If the cylinder were to strike an object with the exposed valve, the cylinder might rupture. A ruptured cylinder can explode with tremendous force or even become a missile that can cause significant damage to anything it impacts.

BRIEF SUMMARY OF THE INVENTION

[0013] In light of the difficulties faced with lifting and moving pressurized tanks, it is one object of the present invention to provide an apparatus that can safely and efficiently lift, support, and control a pressurized tank during transport.

[0014] It is yet another objective of the present invention to provide an apparatus that can be easily maneuvered by a single operator under all load conditions.

[0015] It is yet another objective of the present invention to provide an apparatus that is simple to operate.

[0016] It is yet another objective of the present invention to provide an apparatus that is compact in size to allow easy manipulation of tanks within the confines of ambulance stowage compartments.

[0017] In accordance with a preferred embodiment of the present invention, a battery-powered electric hoist is, provided that incorporates a tank cradle for firmly and safely restraining a pressurized tank for transport. The hoist incorporates an electric linear actuator that can raise the tank to the desired height of an ambulance stowage compartment. Large swivel casters are also provided to allow for easy movement of the hoist and attached tank by a single operator. In addition, the tank cradle and base are compact in size to allow for easy maneuverability. This affords greater ease in inserting and removing a pressurized tank from the cramped stowage compartments of an ambulance.

[0018] The invention accordingly comprises the features described more fully below, and the scope of the invention will be indicated in the claims. Further objects of the present invention will become apparent in the following detailed description read in light of the drawings.

BRIEF DESCRIPTION OF THE SEVERAL VIEWS OF THE DRAWING(S)

[0019] The present invention will be more fully understood by reference to the following detailed description of the preferred embodiments of the present invention when read in conjunction with the accompanying drawings, in which like reference numerals refer to like parts throughout the views, wherein:

[0020] FIG. **1** is a perspective view of an embodiment of the present invention;

[0021] FIG. **2** is a perspective view of an embodiment of the present invention with a pressurized tank attached to the cradle for transport; and

[0022] FIG. **3** is a side-facing illustration of an embodiment of the present invention with a pressurized tank in position for transport.

[0023] Where used in the various figures of the drawing, the same reference numbers designate the same or similar parts. Furthermore, when the terms "top," "bottom," "first," "second," "upper," "lower," "height," "width," "length," "end," "side," "horizontal," "vertical," and similar terms are used herein, it should be understood that these terms have reference only to the structure shown in the drawing and are utilized only to facilitate describing the invention.

[0024] All figures are drawn for ease of explanation of the basic teachings of the present invention only; the extensions of the figures with respect to number, position, relationship, and dimensions of the parts to form the preferred embodiment will be explained or will be within the skill of the art after the following teachings of the present invention have been read and understood. Further, the exact dimensions and dimensional proportions to conform to specific force, weight, strength, and similar requirements will likewise be within the skill of the art after the following teachings of the present invention have been read and understood.

REFERENCE NUMERALS

[0025] **100** hoist
[0026] **102** cradle
[0027] **104** safety ring
[0028] **106** strap
[0029] **108** lip
[0030] **110** linear actuator assembly
[0031] **112** height switch
[0032] **114** battery charger
[0033] **116** battery
[0034] **118** handle
[0035] **120** base
[0036] **122** swivel caster
[0037] **124** fixed caster

DETAILED DESCRIPTION OF THE INVENTION

[0038] FIG. **1** and FIG. **2** illustrate a hoist **100** according to one embodiment of the present invention. FIG. **1** shows the hoist **100** without a pressurized tank attached to its cradle **102**. FIG. **2** shows the hoist **100** with a pressurized tank attached to its cradle **102** and lifted for transport. The hoist **100** features a tank cradle **102** for securely attaching a pressurized cylindrical tank and supporting it during transport. The cradle **102** is attached to a linear actuator assembly **110** that provides vertical lifting motion to the cradle **102**. The electrical power for the linear actuator comes from a 24V battery **116** that features its own trickle battery charger **114**. The linear actuator assembly **110** is attached to a narrow base **120** that features heavy duty casters on its four corners. The front of the base **120** features fixed casters **124** while the rear features swivel casters **122** to allow for easy steering and maneuverability.

[0039] The major structural components of the hoist **100** are constructed from steel. Steel was chosen because it is inexpensive, easy to fabricate, structurally stable, and readily available. However, a person having ordinary skill in the art of fabrication would realize that other metals such as aluminum or even materials such as polymer composites may be used depending upon the structural load requirements. Lighter materials may make the hoist **100** easier to maneuver due to the lighter weight. However, the tradeoff may be in increased cost and reduced stability of a fully-loaded device. Steel provides a good balance of cost, stability, and maneuverability.

[0040] With reference to FIG. **1** and FIG. **2**, the hoist **100** according to the present embodiment features a narrow base **120** with swivel casters **122** for increased maneuverability. The base **120** is fabricated such that there is a center opening between two outer rails. The center opening is just wide enough to allow for a pressurized cylinder to fit between the rails for attachment to the tank cradle **102**. The base **120** also features an attached handle **118**. The handle **118** allows an operator to maintain a comfortable grip on the hoist **100** while maintaining proper control under a full load. The forward edge of the outer rails of the base **120** feature fixed casters **124** while the rearward edge of the rails feature swivel casters **122**. The swivel casters **122** are located essentially beneath the operator's handle **118** to allow the hoist **100** to be easily steered into position even with a load attached. In addition, the swivel casters **122** also feature locking mechanisms to allow a fully-loaded hoist **100** to be safely parked.

[0041] While the current embodiment provides four casters for maximum stability, other configuration s are possible and are within the scope of the present invention. For example, in another embodiment all four of the casters could swivel. In yet another embodiment, the base **120** could utilize only three casters; two on the forward ends of the outer rails of the base **120** nearest the tank opening and one swivel caster on the opposite end of the base **120**, located in the center approximately beneath the linear actuator **110**. Utilizing only three casters would improve the maneuverability of the hoist **100** but at the same time would sacrifice some of the vertical stability.

[0042] With reference to FIG. **1** and FIG. **2**, the hoist **100** according to the present embodiment features a tank cradle **102** that is shaped to wrap partially around a pressurized tank for support. The radius of the curve of the cradle **102** approximates the radius of the body section of the pressurized tank. The cradle **102** also extends vertically to the approximate height of the body portion of a full-sized pressurized tank. Thus, because its height is suitable for the tallest tank, the cradle **102** can support essentially any sized pressurized tank.

[0043] With reference to FIG. **1** and FIG. **2**, the cradle **102** features a lip **108** near the bottom that engages the base of a pressurized tank that is to be attached to the cradle **102**. To attach a tank, the lip **108** is brought into contact with the base of the tank. The tank is then tipped slightly away from the lip **108** so that the lip **108** can slide beneath the tank. Once the tank rests on the lip **108**, the primary and backup attachment means can be utilized to restrain the tank within the confines of the cradle **102**.

[0044] With reference to FIG. **1** and FIG. **2**, the primary attachment means provided in the present embodiment is a strap **106** with an adjustable side release buckle. The strap **106** is wrapped around the body of the tank and the side release buckle is engaged and adjusted to put tension on the strap **106** to restrain the tank within the cradle **102**. While the present embodiment utilizes a strap **106** for the primary attachment means, other embodiments could utilize chain, rope, or cable. Also, a strap with a ratchet tightening mechanism, a belt-type buckle, or a hook and loop fastener could be used in place of the adjustable side release buckle for maintaining proper tension on the strap **106**.

[0045] With reference to FIG. **1** and FIG. **2**, the backup attachment means provided in the present embodiment is a safety ring **104**. The safety ring **104** is designed to provide backup retention of the tank in the cradle **102** should the strap **106** inadvertently release. In the present embodiment, the safety ring **104** is constructed of plastic coated steel cable. The steel cable provides tensile strength while the plastic coating prevents the cable from scratching or marring the finish of a tank. While the present embodiment utilizes plastic coated steel cable for the safety ring **104**, other embodiments could utilize uncoated steel cable, chain, rope, or even strap.

[0046] The safety ring **104** is threaded through a piece of tubular steel that fits within the center piece of slightly larger diameter tubular steel that makes up the framework of the cradle **102**. Thus, the safety ring **104** can be lifted by raising the attached piece of tubular steel to a height that allows the safety ring **104** to slip easily over the tank's valve portion. When released, the tubular steel attached to the safety ring **104** slips down within the larger center piece of tubular steel that makes up the framework of the cradle **102**. This allows the safety ring **104** to be rapidly installed and removed.

[0047] The hoist **100** according to the present embodiment features a linear actuator assembly **110** that is attached to both the cradle **102** and base **120**. The linear actuator **110** uses electrical power from the 24V battery **116** to operate. The height switch **112** allows the linear actuator to extend and raise the tank cradle **102** with attached tank up to 27 inches above the floor surface. This height is sufficient for insertion of a tank into typical ambulance stowage compartments. A second position of the height switch **112** allows the linear actuator **110** to retract and thus return the cradle **102** to the floor level.

[0048] Power for the linear actuator **110** comes from a rechargeable 24V battery **116**. The hoist **100** also features a built-in trickle charger **114** to allow the hoist **100** to be plugged into a standard wall socket and recharged when not in use. Battery power is utilized to prevent the need for an electrical cord to provide power to operate the hoist **100**. This increases the devices portability and maneuverability. While the present embodiment utilizes a 24V power source, other voltages may be substituted as determined by the voltage requirements of the linear actuator **110** mechanism.

[0049] FIG. **3** shows a hoist **100** being used by an operator **300** to transport a pressurized tank **302**. The operator **300** maneuvers the hoist **100** by utilizing the handle **118**. Once in position, the hoist **100** can be parked by locking the swivel casters **122**. The cradle **102** can then be raised or lowered by operation of the height switch **112**.

[0050] In view of the foregoing, the hoist **100** serves special needs required by the EMS community. In particular, the hoist **100** allows a single operator to safely and efficiently lift and transport a pressurized tank without the risk of back injury. The compact features of the hoist **100** lend to the device's maneuverability and ease of operation. Thus, a single operator can effectively remove a pressurized tank from an ambulance compartment and install a new one without assistance.

[0051] Although the invention hereof has been described by way of a preferred embodiment, it will be evident that other adaptations and modifications can be employed without departing from the spirit and scope thereof. The terms and expressions employed herein have been used as terms of description and not of limitation; and thus, there is no intent of excluding equivalents, but on the contrary it is intended to cover any and all equivalents that may be employed without departing from the spirit and scope of the invention.

I claim:

1. A device for lifting and transporting a pressurized tank, said device comprising:
- a cradle, said cradle having an arcuate shape approximating the radius of said tank;
- a base, said base having at least three casters; and
- a linear actuator, said actuator physically connecting said cradle to said base such that when energized said actuator causes said cradle's height to change with respect to said base.

2. The device of claim **1**, said device further comprising:
- a battery; and
- a battery charger.

3. The device of claim **1** wherein said cradle further comprises:
- a lip, said lip for supporting the base of said tank when attached to said cradle;
- a strap, said strap serving as a primary means for removably attaching said tank to said cradle; and
- a safety ring, said ring serving as a secondary means for removably attaching said tank to said cradle.

4. The device of claim **1** wherein the material for said cradle and said base are chosen from the group consisting of steel, aluminum, and polymer composite.

5. The device of claim **1** wherein said linear actuator can raise said cradle up to 27 inches above the surface upon which said device sits.

6. The device of claim **1** wherein at least one of said casters swivels.

7. The device of claim **1** wherein at least one of said casters does not swivel.

8. The device of claim **1** wherein said linear actuator is powered by a battery.

9. The device of claim **1** further comprising a handle for gripping by an operator.

10. A device for lifting and transporting a pressurized tank, said device comprising:
- a cradle, said cradle having an arcuate shape approximating the radius of said tank and a lip for supporting the base of said tank;
- a primary attachment means for removably attaching said tank to said cradle;
- a base, said base having at least three casters;
- a linear actuator, said actuator physically connecting said cradle to said base such that when energized said actuator causes said cradle's height to change with respect to said base;
- a battery; and
- a battery charger.

11. The device of claim **10** wherein the material for said cradle and said base are chosen from the group consisting of steel, aluminum, and polymer composite.

12. The device of claim **10** wherein said primary attachment means is chosen from the group consisting of strap, chain, rope, and cable.

13. The device of claim **10** wherein said primary attachment means is chosen from the group consisting of a strap with a side release buckle, a strap with a ratchet tightening mechanism, a strap with an adjustable buckle, and a strap with a hook and loop fastener.

14. The device of claim **10**, said device further comprising a backup attachment means for removably attaching said tank to said cradle, said backup means chosen from the group consisting of strap, chain, rope, and cable.

15. The device of claim **10** wherein at least one of said casters swivels.

16. The device of claim **10** wherein at least one of said casters does not swivel.

17. The device of claim **10** wherein each of said casters swivels.

18. The device of claim **10** wherein said linear actuator can raise said cradle up to 27 inches above the surface upon which said device sits.

19. The device of claim **10** further comprising a handle for gripping by an operator.

* * * * *