Dec. 1, 1953 K. N. THORNTON 2,660,999

SPINAL COLUMN ALIGNING TABLE

Filed May 16, 1951

4 Sheets-Sheet 1

Fig. 1

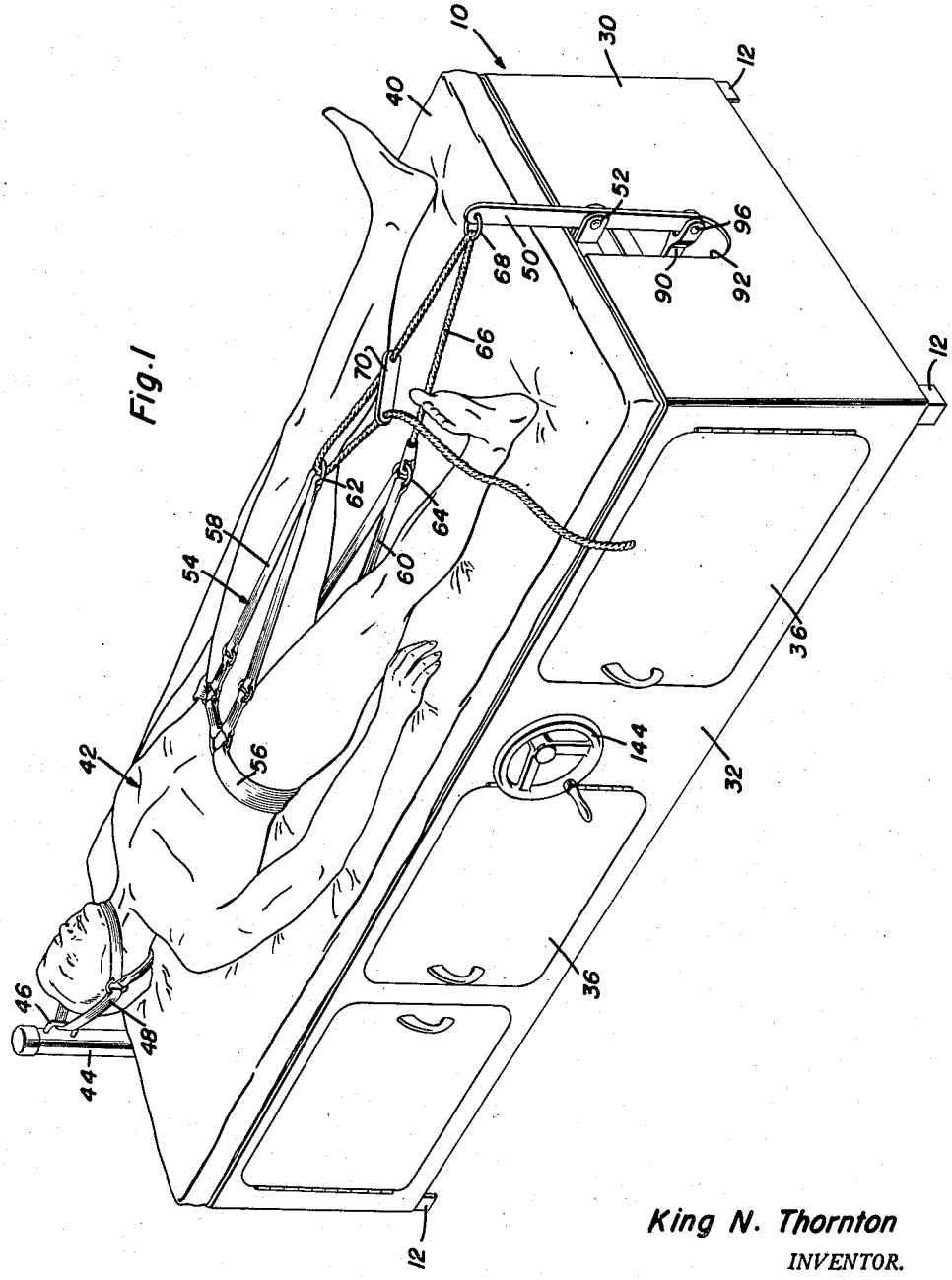

King N. Thornton

INVENTOR.

BY Clarence A. O'Brien and Harvey B. Jacobson

Attorneys

Dec. 1, 1953 K. N. THORNTON 2,660,999

SPINAL COLUMN ALIGNING TABLE

Filed May 16, 1951 4 Sheets-Sheet 2

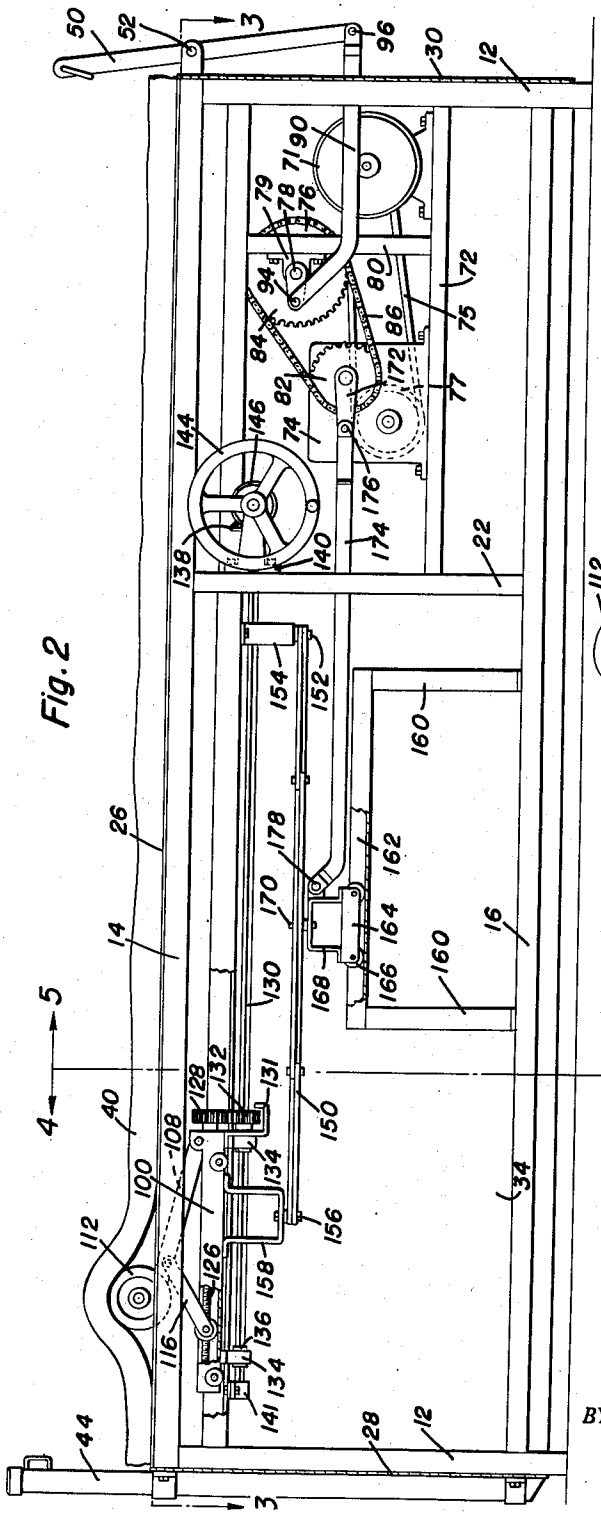

Fig. 2

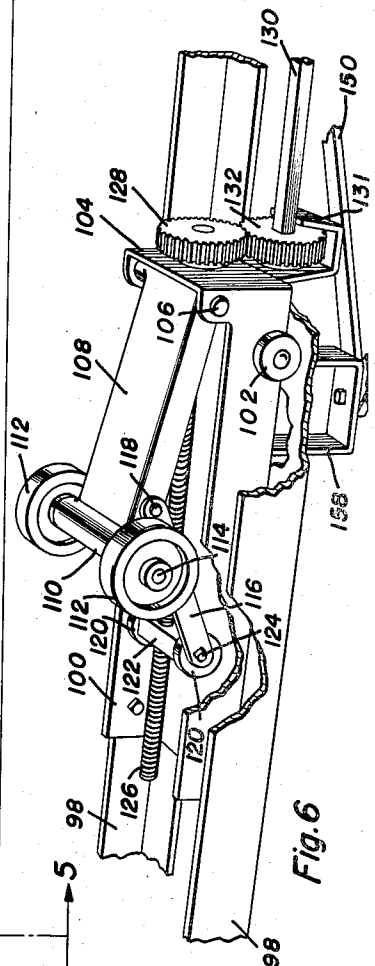

Fig. 6

King N. Thornton
INVENTOR.

BY Clarence A. O'Brien and Harvey B. Jacobson
Attorneys

Dec. 1, 1953 K. N. THORNTON 2,660,999

SPINAL COLUMN ALIGNING TABLE

Filed May 16, 1951 4 Sheets-Sheet 3

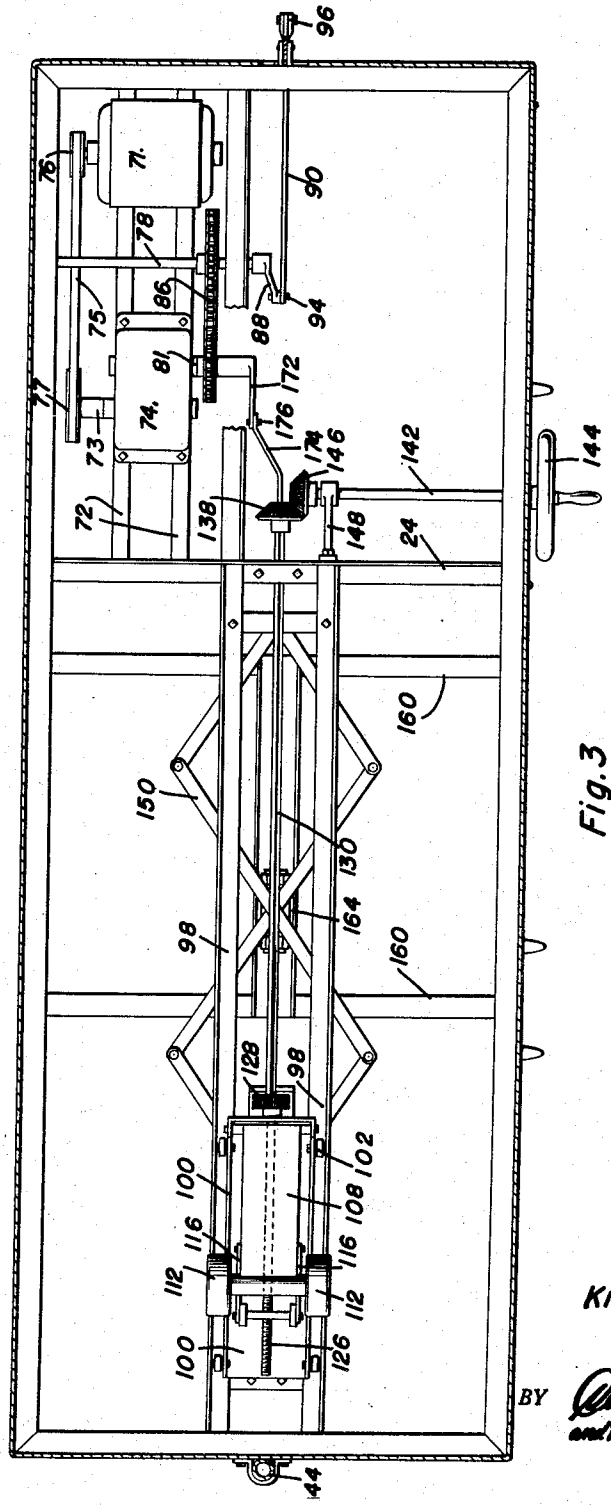

Fig. 3

King N. Thornton
INVENTOR.

BY Clarence A. O'Brien and Harvey B. Jacobson
Attorneys

Dec. 1, 1953 K. N. THORNTON 2,660,999

SPINAL COLUMN ALIGNING TABLE

Filed May 16, 1951 4 Sheets-Sheet 4

Fig. 4

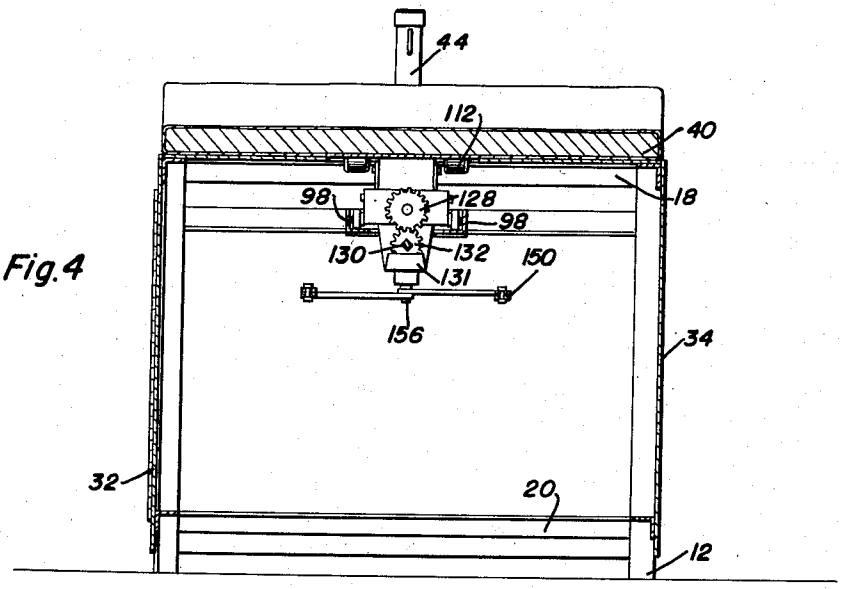

Fig. 5

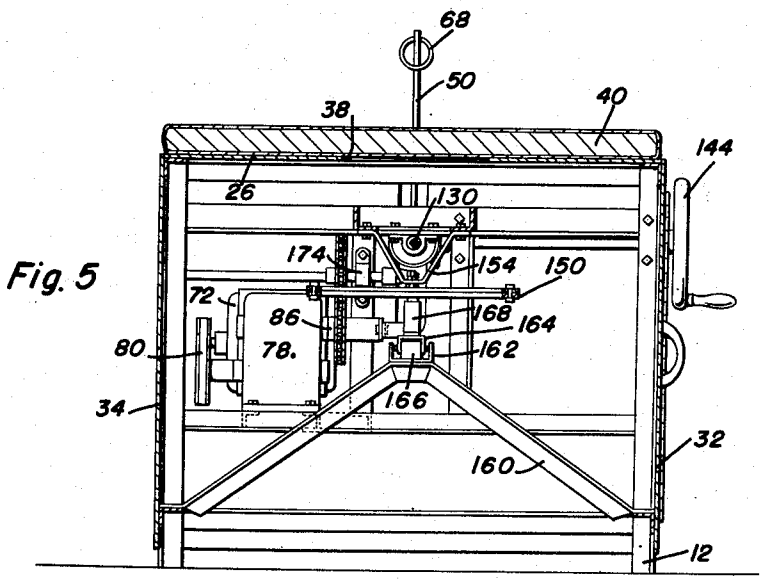

King N. Thornton
INVENTOR.

BY Clarence A. O'Brien and Harvey B. Jacobson
Attorneys

Patented Dec. 1, 1953

2,660,999

UNITED STATES PATENT OFFICE

2,660,999

SPINAL COLUMN ALIGNING TABLE

King N. Thornton, West Palm Beach, Fla.

Application May 16, 1951, Serial No. 226,630

6 Claims. (Cl. 128—33)

1

This invention relates to a therapeutic machine for periodically tensioning the spinal column of a patient while kneading the spinal column to readjust the vertebrae.

The primary object of this invention is to periodically tension the spinal column of a patient so as to relax the muscles in the vicinity of the same, whereby the vertebrae may be readily aligned and adjusted and to knead the spinal column and vicinity during such periodic tensioning to effect the desired alignment and adjustment of the vertebrae.

Another important object of the present invention is to knead the muscles and tissues adjoining the spinal cartilages and ligaments to stimulate a healthful condition of the intervertebral disks. The kneading may be used independently of the tensioning.

Another important object of the present invention is to provide means for kneading the spinal column that straddles the spinous processes and which do not strike the angles of the ribs.

Still another important object of the present invention is to provide means for kneading the spinal column that is adjustable in the pressure brought to bear thereby against the spinal region at any time during the operation of the machine.

Yet another important object of the present invention is to provide a machine of this character in which the periodic tensioning of the spinal column of the patient is so timed in relation to the kneading operation that maximum effectiveness is obtained in both the upward and the downward kneading movements of the machine.

A meritorious feature of the present invention resides in the provision of means affording simultaneous and synchronous or asynchronous action of the tensioning and kneading means.

Another important feature of the present invention resides in the means provided for securing the spinal column tensioning means to the patient.

Still another important feature of the present invention resides in the spacing of the rollers of the kneading means, whereby the rollers straddle spinous processes of the spinal column, but are placed sufficiently close enough together to avoid striking the angles of the ribs.

Yet another important feature of the present invention resides in the means provided for elevating the kneading means that may be operated at anytime during the operation of the machine.

A final important feature of the present invention to be specifically enumerated herein resides in the means employed for reciprocating the kneading means, particularly the use of the pantograph linkage and the auxiliary carriage, whereby a large stroke amplitude is attained for the kneading means without necessitating the use of a large and cumbersome crank in the actuating assembly.

2

These, together with various ancillary objects and features of the invention which will become apparent as the following description proceeds, are attained by the present invention, a preferred embodiment of which has been illustrated by way of example, in the accompanying drawings, wherein:

Figure 1 is a perspective view of the entire machine showing the same in use;

Figure 2 is a side elevational view of the present invention, showing the same with the near side wall removed and portions of the machine being broken away to show the internal construction of the same;

Figure 3 is a horizontal sectional view taken upon the plane of the section line 3—3 of Figure 1;

Figure 4 is a vertical transverse sectional view taken upon the plane of section line 4—4 of Figure 2;

Figure 5 is a vertical transverse sectional view taken upon the plane of the section line 5—5 of Figure 2; and

Figure 6 is a perspective detail taken on an enlarged scale of the main carriage and the kneading means, portions of this view being broken away to show the internal construction of the same.

Reference is now made more specifically to the accompanying drawings, wherein like numerals are used to designate similar parts throughout the various views, and in which the machine constituting the subject matter of the present invention is designated at 10.

The machine 10 is generally box-shaped and includes a suitable frame consisting of corner posts 12 that are connected by upper and lower side rails 14 and 16 respectively and by upper and lower end rails 18 and 20 respectively. The frame further includes intermediate upright posts 22 connecting the side rails 14 and 16 and supporting at their upper ends a cross rail 24. A table 26 rests on the upper rails 14 and 18 and the cross rail 24 and is suitably secured thereto. The frame has secured thereto end walls 28 and 30 and side walls 32 and 34, it being noted that the side wall 34 is provided with access openings

closed by hinged doors 36 whereby the interior of the machine may be reached. The table or top 26 of the machine 10 is readily removable to permit free access to all the working parts to be subsequently described.

The table 26 is provided with a longitudinal slot or opening 38, the purpose of which will be presently described, and a deformable pad or mattress 40 is disposed on the table 26 and overlies the slot 38.

As shown in Figure 1, the table 26 and the pad 40 are of sufficient size that a patient designated generally at 42 may lie in a supine position thereon. Means is provided whereby the spinal column of the patient 42 will be periodically tensioned. Such means comprises a standard secured to the frame and extending upwardly above the pad 40 at one end thereof. Such standard is designated at 44 and carries adjacent its upper end a loop 46 that is engaged by a flexible harness construction 48 adapted to engage the patient 42 under his chin and below the back portion of his head, as clearly shown in Figure 1. The purpose of the standard 44 and the harness construction 48 is, of course, to prevent movement of the patient 42 away from the head end of the machine 10.

As best shown in Figures 1 and 2, a lever 50 is pivoted intermediate its ends, as at 52, to the frame at the front end of the latter. A body harness designated generally 54 is provided for detachably engaging the patient 42, such harness 54 including a releasable waistband 56 for embracing the patient 42 above his hips, the band 56 having forward and rear pairs of converging straps 58 and 60 respectively secured thereto which terminate in securing rings 62 and 64. A flexible securing element 66 has one end secured to the ring 64 and is engaged through a loop 68 carried at the top of the lever 50 and the ring 62 and is secured in adjusted tensioned relation by means of a friction clamp 70 having spaced apertures therethrough through which the elements 66 extend. Obviously, the purpose of the harness 54 and the element 66 is to cause movement of the patient's hips towards the foot of the machine when the upper end of the lever moves away from the machine. As thus far described, it will be evident that upon oscillation of the lever 50, it being assumed that the element 66 has been properly tensioned, the spinal column of the patient 42 will be sequentially tensioned or stretched and relaxed from tension.

In order to oscillate the lever 50, a prime mover such as the electric motor 71 is provided that is mounted upon frame members 72 that are suitably supported by the posts 12 and 22. The input shaft 73 of a speed reducer 74 is also mounted on the frame members 72 and is driven by means of a drive belt 75 entrained over pulleys 76 and 77 fixed on the armature shaft of the motor 71 and the shaft 73 respectively. A transverse shaft 78 is journaled in bearings 79 carried by upright support members 80 mounted on the frame members 72 as clearly shown in Figures 2 and 3. The output shaft 81 of the speed reducer and the shaft 78 are provided with toothed sprockets 82 and 84 respectively, and an endless drive chain 86 is entrained over the sprockets 82 and 84, whereby rotation of the output shaft 81 is imparted to the shaft 78. The shaft 78 has a crank arm 88 at one end, and a pitman 90 is provided which extends through a suitable opening 92 in the end wall 30, and has its opposite ends pivotally connected to the crank 88 and the lower end of the lever 50 as at 94 and 96 respectively, so that actuation of the prime mover 71 will cause oscillatory movement of the lever 50 as will be readily understood.

Means is provided for massaging or kneading the spinal region of the patient 42. As best shown in Figures 3 and 6, a pair of spaced angle guides are suitably mounted below the table 26 in parallel relation with the slot 38. A channel shaped carriage 100 is provided which is disposed between the angles 98, which carriage 100 has journaled thereon rollers 102 which ride on the guides 98. As best shown in Figure 6, the carriage 100 is provided with an end wall 104, which at 106 has an arm 108 pivoted thereto that is inclined upwardly above the carriage 100. The upper end of the arm 108 is enlarged as at 110 and is provided with a transverse bore, not shown. A pair of massaging rollers 112 are disposed on the opposite sides of the enlarged portion 110 and are rotatably supported by means of a pivot bolt 114 that extends to the rollers 112 and the enlarged portion 110.

The arm 108 and consequently the rollers 112 are adjustably supported by means of a pair of parallel links 116 pivoted to the arm 108 at their upper ends in a position adjacent the enlarged portion 110 as at 118. A pair of supporting rollers 120 are journaled between the lower ends of the links 116, and a travelling nut 122 is carried between the lower ends of the links 116 by means of a pair of pivot pins 124 that are carried by the links 116 that project towards each other through the rollers 120 to be received in pivot apertures, not shown, at the opposite ends of the travelling nut 122. The travelling nut 122 is threaded upon a threaded shaft 126 that adjacent one end is rotatably secured to and projects through the end wall 104. The end of the shaft 126 projecting through the end wall 104 has nonrotatably secured thereon a gear 128 by means of which the shaft 126 may be rotated, it being noted that the height at which the rollers 112 will be supported may be adjusted by means of such rotation.

As best shown in Figures 2, 3 and 6, a longitudinally extending squared shaft 130 is rotatably supported below the travel path of the carriage 100, upon which shaft 130 is slidably disposed a gear 132 for rotation therewith, such gear 132 being disposed in meshing engagement with the gear 128, so that rotation of the shaft 130 will be imparted to the shaft 126. A pair of bearing brackets 134 are carried by the carriage 100 which rotatably support collars 136 that have squared apertures, not shown, therethrough which the shaft 130 slidably extends. At one end of the shaft 130 a bevel gear 138 is fixedly secured thereto, the end of the shaft 130 adjacent such gear 138 being supported in a bearing 140 carried by a suitable support such as the frame member 24. The opposite end of the shaft is journaled in a thrust bearing 141, carried by the guide angles 98 to prevent endwise movement. Obviously, either of the bearings 140 or 141 may be attached to the guide angles 98 or the frame of the machine. A shaft 142 is journaled through the side wall 32 and has a hand wheel 144 provided on one end and a bevel gear 146 provided on its other end that is in meshing engagement with the gear 138, additional support being given the shaft 142 by a bearing bracket 148 carried by the frame member 24. It will thus be seen that by means of the hand wheel 144 an operator may rotate the shaft 130 irrespective of the position of the carriage 100, so that the position of the rollers 112 may

be adjusted irrespective of the position of the carriage 100 and during movement of the latter. The gear 132 is retained in mesh with gear 128 by means of a bracket or finger 131 carried by the carriage 100 that slidably embraces the gear 132.

Means is provided for reciprocating the carriage 100, which means comprises a longitudinally extending pantograph or lazy tong linkage 150 disposed below the guide rails, such linkage 150 being secured at one end at 152 to a depending bracket 154 carried by the guide rails 98, and having its other end secured as at 156 to a depending bracket 158 carried by the carriage 100.

Supported by a pair of inverted V-shaped frame members 160 that are suitably secured to the frame members 16 is a longitudinally extending channel shaped guide and support rail 162. An auxiliary carriage 164 including supporting rollers 166 is guidingly supported on the guide rail 162 as clearly shown in Figures 2 and 5. The auxiliary carriage 164 carries an upstanding bracket 168 that is connected in turn to the pantograph or lazy tong linkage by a pin 170. It will be appreciated that the pin 170 constitutes a central support for the pantograph as well as a central pivot for linkage. Furthermore, it will be evident upon an inspection of the drawings that the motion of the pivotal connection 156, and consequently the motion of the carriage will be twice that of the pin 170 since the other end of the pantograph is anchored to the bracket 154, and since the pantograph only includes one intermediate central pivot. Accordingly, it will be evident that the motion of the carriage 100 will have the same characteristics as the motion of the auxiliary carriage 164, however, having twice the amplitude of the motion of the carriage 164. It will be understood that the pantograph linkage may be constructed to have as many intermediate central pivots as desired, to any one of which the pin 170 may be pivotally connected, whereby any desired multiplication of the motion of the carriage 164 may be afforded the carriage 100.

Means is provided to reciprocate the carriage 164 which includes a crank arm 172 fixed on the outer end of the shaft 81 of the speed reducer, and a pitman 174 is provided which has one end pivotally connected as at 176 to the crank 172 and its other end pivotally connected as at 178 to the bracket 168 carried by the auxiliary carriage 164. It will thus be seen that upon rotation of the output shaft 81 of the speed reducer, not only is the lever 50 oscillated, but in addition, the carriage 164 is reciprocated, which in turn reciprocates the main carriage 100.

Any driving ratio desired may be established between the output shaft 81 and the shaft 78 by selecting proper sized sprockets 82 and 84. Movement should be substantially at the ratio of two to one, however, not in exact ratio. It is desired that the action of the tensioning arm and the carriage be not synchronous but that the extreme tensioning come when the rollers 112 are in varying locations in relationship with the spinal column during periods of extreme tensioning. In addition, it is better that the rollers 112 move an appreciable distance along the spinal column during periods of extreme tensioning.

The operation of the invention will be readily understood. The patient is first positioned on the machine, and is secured to the support 44 and the lever 50, when the latter member is in the position shown in Figure 2, that is, the position affording maximum relaxation of the tension on the spine. The electric motor 71 is then started so that the lever 50 will be oscillated and the carriage 100 reciprocated. As best shown in Figure 2, it will be seen that the rollers 112 extend upwardly through the slot 38 in the table top, so that during longitudinal reciprocation of the carriage 100, the rollers 112 will deform the pad 40 upwardly as clearly shown in Figure 2 so as to press gently against the back of the patient on opposite sides of the spinal column. As will be evident, the pressure brought to bear by the rollers 112 against the back of the patient may be adjustably varied as desired during the operation of the machine by turning the hand wheel 144.

From the foregoing, the construction and operation of the device will be readily understood and the further explanation is believed to be unnecessary. However, since numerous modifications and changes will readily occur to those skilled in the art after a consideration of the foregoing specification and accompanying drawings, it is not desired to limit the invention to the exact construction shown and described, but all suitable modifications and equivalents may be resorted to, falling within the scope of the appended claims.

Having described the invention, what is claimed as new is:

1. A therapeutic machine comprising a table for receiving a patient and having a longitudinal slot therethrough, a carriage disposed below and guided for longitudinal reciprocation with respect to the table, kneading means carried by the carriage and adapted to act upon the spinal column of a patient through said slot, means for reciprocating the carriage comprising a pantograph linkage having one end secured to the carriage and its other end fixedly mounted on the table, an auxiliary carriage disposed below the pantograph and guided for longitudinal reciprocation relative to the table, means connecting the auxiliary carriage and the pantograph linkage, a crank carried by a rotatably mounted shaft, and a pitman having its opposite ends connected to the crank and the auxiliary frame to reciprocate the latter upon rotation of said shaft.

2. A therapeutic machine comprising a table for receiving a patient having a longitudinal slot therethrough, a carriage means disposed below and guided for longitudinal reciprocation with respect to the table, kneading means carried by the carriage and extending through said slot, means for periodically tensioning the spinal column of a patient comprising means carried by the table adapted to be secured to a patient, a lever pivotally mounted in the table for movement towards and away from said last means, means carried by the lever adapted to be secured to a patient, a prime mover, and means operatively connecting the prime mover to the lever and the carriage means to simultaneously oscillate the lever and reciprocate the carriage means, including a pair of power driven operatively connected, rotatably mounted shafts, each of said shafts having a crank thereon, a first pitman connecting one of said cranks to the lever, and means including a second pitman operatively connecting the other crank to the carriage means, the ratio of rotation of the shafts being such that the reciprocation of the carriage will be asynchronous with the oscillation of the lever.

3. A therapeutic machine comprising a table for receiving a patient and having a longitudinal slot therethrough, a carriage disposed below and

mounted for longitudinal reciprocation relative to the table, means for reciprocating said carriage, kneading means carried by the carriage adapted to operate through the slot upon the spinal column of a patient, said kneading means including an arm pivoted at its lower end to the carriage for vertical swinging movement, an elevating link having its upper end pivoted to the arm for vertical swinging movement and having its lower end movably supported on the carriage, a shaft rotatably mounted on the carriage and secured against longitudinal movement relative to the carriage, a travelling nut carried by the elevating link, said shaft having a threaded portion on which is received the travelling nut, and means for rotating the shaft.

4. A therapeutic machine comprising a table for receiving a patient and having a longitudinal slot therethrough, a carriage disposed below and mounted for longitudinal reciprocation relative to the table, means for reciprocating said carriage, kneading means carried by the carriage adapted to operate through the slot upon the spinal column of a patient, said kneading means including an arm pivoted at its lower end to the carriage for vertical swinging movement and carrying a pair of widely spaced rollers at its upper end, an elevating link having its upper end pivoted to the arm for vertical swinging movement and having its lower end movably supported on the carriage, a shaft rotatably mounted on the carriage and secured against longitudinal movement relative to the carriage, a travelling nut carried by the elevating link, said shaft having a threaded portion on which is received the travelling nut, and means for rotating the shaft.

5. A therapeutic machine comprising a table for receiving a patient and having a longitudinal slot therethrough, a carriage disposed below and mounted for longitudinal reciprocation relative to the table, means for reciprocating said carriage, kneading means carried by the carriage adapted to operate through the slot upon the spinal column of a patient, said kneading means including an arm pivoted at its lower end to the carriage for vertical swinging movement, an elevating link having its upper end pivoted to the arm for vertical swinging movement and having its lower end movably supported on the carriage, a shaft rotatably mounted on the carriage and secured against longitudinal movement relative to the carriage, a travelling nut carried by the elevating link, said shaft having a threaded portion on which is received the travelling nut, and means for rotating the further shaft rotatably mounted below the table having a gear longitudinally slidable thereon and mounted to rotate therewith, a gear mounted in the first mentioned shaft, and means for retaining said gears in meshed relation, whereby the kneading means may be selectively raised and lowered by turning the further shaft irrespective of the position of the carriage and during movement of the latter.

6. A therapeutic machine comprising a table for receiving a patient and having a longitudinal slot therethrough, a deformable layer of material overlying the table and the slot, a carriage disposed below and mounted for longitudinal reciprocation relative to the table, means for reciprocating said carriage, kneading means carried by the carriage adapted to operate through the slot upon the spinal column of a patient, said kneading means including an arm pivoted at its lower end to the carriage for vertical swinging movement, an elevating link having its upper end pivoted to the arm for vertical swinging movement and having its lower end movably supported on the carriage, a shaft rotatably mounted on the carriage and secured against longitudinal movement relative to the carriage, a travelling nut carried by the elevating link, said shaft having a threaded portion on which is received the travelling nut, and crank means carried by said table for rotating the shaft, irrespective of the position of the carriage and during movement of the latter.

KING N. THORNTON.

References Cited in the file of this patent

UNITED STATES PATENTS

Number	Name	Date
1,735,569	Gregory	Nov. 12, 1929
2,193,882	Petersen	Mar. 19, 1940
2,534,587	Fisher et al.	Dec. 19, 1950