(12) INTERNATIONAL APPLICATION PUBLISHED UNDER THE PATENT COOPERATION TREATY (PCT)

(19) World Intellectual Property Organization
International Bureau

(43) International Publication Date
08 July 2021 (08.07.2021)

WIPO | PCT

(10) International Publication Number
WO 2021/137155 A1

(51) International Patent Classification:
H01B 13/02 (2006.01) *B65H 75/24* (2006.01)

(21) International Application Number:
PCT/IB2020/062517

(22) International Filing Date:
29 December 2020 (29.12.2020)

(25) Filing Language: English

(26) Publication Language: English

(30) Priority Data:
116041 31 December 2019 (31.12.2019) PT

(71) Applicant: **INESE - INOVAÇÃO EM SISTEMAS ELÉTRICOS - LDA.** [PT/PT]; Rua D.marcos Da Cruz Nº 1693, Perafita - Matosinhos, 4455-482 Perafita (PT).

(72) Inventors: **MILHAZES REMELGADO, Noémio José**; Rua Das Agras, 65, Guifões - Matosinhos, 4460-003 Guifões (PT). **ARMADA MARTINS, Maurício**; Rua Da Póvoa, 346, 4560-134 Guilhufe (PT).

(74) Agent: **PATENTREE**; Association 669, Rua de Salazares, 842, Edf. NET, 4149-002 Porto (PT).

(81) Designated States *(unless otherwise indicated, for every kind of national protection available)*: AE, AG, AL, AM, AO, AT, AU, AZ, BA, BB, BG, BH, BN, BR, BW, BY, BZ, CA, CH, CL, CN, CO, CR, CU, CZ, DE, DJ, DK, DM, DO, DZ, EC, EE, EG, ES, FI, GB, GD, GE, GH, GM, GT, HN, HR, HU, ID, IL, IN, IR, IS, IT, JO, JP, KE, KG, KH, KN, KP, KR, KW, KZ, LA, LC, LK, LR, LS, LU, LY, MA, MD, ME, MG, MK, MN, MW, MX, MY, MZ, NA, NG, NI, NO, NZ, OM, PA, PE, PG, PH, PL, PT, QA, RO, RS, RU, RW, SA, SC, SD, SE, SG, SK, SL, ST, SV, SY, TH, TJ, TM, TN, TR, TT, TZ, UA, UG, US, UZ, VC, VN, WS, ZA, ZM, ZW.

(84) Designated States *(unless otherwise indicated, for every kind of regional protection available)*: ARIPO (BW, GH, GM, KE, LR, LS, MW, MZ, NA, RW, SD, SL, ST, SZ, TZ, UG, ZM, ZW), Eurasian (AM, AZ, BY, KG, KZ, RU, TJ, TM), European (AL, AT, BE, BG, CH, CY, CZ, DE, DK, EE, ES, FI, FR, GB, GR, HR, HU, IE, IS, IT, LT, LU, LV, MC, MK, MT, NL, NO, PL, PT, RO, RS, SE, SI, SK, SM, TR), OAPI (BF, BJ, CF, CG, CI, CM, GA, GN, GQ, GW, KM, ML, MR, NE, SN, TD, TG).

Published:
— *with international search report (Art. 21(3))*
— *before the expiration of the time limit for amending the claims and to be republished in the event of receipt of amendments (Rule 48.2(h))*
— *in black and white; the international application as filed contained color or greyscale and is available for download from PATENTSCOPE*

WO 2021/137155 A1

(54) **Title:** DEVICE AND METHOD FOR COLLECTING A WIRE ROLL FROM A WIRE TWISTING MACHINE

(57) **Abstract:** Device and method for collecting a wire roll of a cradle, from a wire twisting machine comprising an expandable shaft for winding the wire, comprising: a central shaft for collecting the wire roll and for operating the expandable shaft; a roll remover extendable arm for moving the wire roll from the expandable shaft to the central shaft; a cradle-holder comprising an extendable arm and a stopper for holding the cradle stably while the wire roll is moved from the expandable shaft to the central shaft, wherein the central shaft comprises: an outer shaft for non-rotative supporting of the wire roll; a middle shaft, concentrically arranged inside the outer shaft, for coupling and rotation of the expandable shaft; an inner shaft with a tip, concentrically arranged inside the middle shaft, for coaxially coupling to the expandable shaft, for contracting said expandable shaft while the wire roll is moved from the expandable shaft to the central shaft.

DEVICE AND METHOD FOR COLLECTING A WIRE ROLL FROM A WIRE TWISTING MACHINE

Technical field

[0001] The present disclosure relates to a device for automatically collecting a wire roll from a wire twisting machine. In particular the device comprises: an expandable shaft that is responsible for winding the wire, comprising: a central shaft for collecting the wire roll and for operating the expandable shaft; a roll remover extendable arm to remove the wire roll from the expandable roll shaft, wherein it has an forearm that guides the wire and makes sure it reattaches it to the expandable shaft to begin the manufacture of a new wire roll; a cradle-holder comprising an extendable arm and a stopper, to lift the spreader of wire and stabilize the cradle; a cut handler that has the task to cut the wire at the time this is required to finish the cycle of the tool; and a central shaft comprising: an outer shaft to support the wire rolls on the EOAT (End Of Arm Tool); a middle shaft, concentrically arranged inside the outer shaft, to give rotation to the expandable shaft; and an inner shaft with an air pressure inflator tip connected to a pneumatic cylinder, concentrically coupled inside the middle shaft, for coaxial coupling to the expandable shaft for retracting said expandable shaft.

Background

[0002] Document EP 2 777 053 B1 discloses a twisting device for twisting synthetic, metallic or optical wires, such as ropes, electrical cables, line bundles, fiber optic cables, etc. Comprising a base and a first twisting head which can be rotated relative to the base and which is designed to grip the lines to be twisted at a first end of the lines. This document is characterized by the twisting device having a second twisting head which can be rotated relative to the base, which is arranged opposite the first twisting head, and which is designed to grip the lines to be twisted at a second end of the lines, said second end lying opposite the first end. The second twisting head can be rotated in the

opposite direction of the first twisting head. This document also relates to a method for twisting lines.

[0003] The high amount of labour needed for the process of removing a coil of twisted wire and the restart of the twisting machines are for almost all producers at 100% manual process, and it is our intention to make this a totally automatic process.

[0004] The manufacturers usually have a high number of twisting machines and with that comes a high number of operatives to manage all this process.

[0005] Currently there are in particular two solutions: A machine often called off as “Doffing Robot” which is attached to the twisting machine. This solution has the disadvantage of needing a “Doffing Robot” per machine and with that, comes a high cost when there is a high amount of machines, and another disadvantage is the inflexibility of the “Doffing Robot” since it only works for each model of it respective brand, also it has a high rate of failure with the medium complexity that it needs. The main manufacturer of this solution is Roblon. The mains advantages of this solution are when there is a malfunction with the robot, only one twisting machine stops and the celerity of the process.

[0006] Machine from SIMA which works on a rail and can manage several twisting machines in simultaneous (± 6units). With a low rate of work, it was too complex with big dimensions and lots of malfunctions. It was an unsuccessful project and that is why it was abandoned by SIMA.

[0007] Due to the struggles shown by several clients, such as:

High amount of labour needed to manufacture the product, and having big costs in labour compared to the feedstock in matter;

Manage enough labour for the needs;

The product is made by extrusion, often in a straight production line, and so it needs operators with 24h/day availability, almost every day of the year;

Unstable amount of available operators, and the variations of the available amount of operators throughout the year;

Hard adaptation of the schedule for the operators with the workload peaks;

Different products, due to differences in operators;

Lack of product quality control.

[0008] These facts are disclosed in order to illustrate the technical problem addressed by the present disclosure.

General Description

[0009] This disclosure proposes a device for automatically collecting a wire roll of a cradle from a wire twisting machine comprising: an expandable shaft that is responsible for winding the wire, comprising: a central shaft for collecting the wire roll and for operating the expandable shaft; a roll remover extendable arm for moving the wire roll from the expandable shaft to the central shaft; a cradle-holder comprising an extendable arm and a stopper to hold the cradle stable while the wire roll is moved from the expandable shaft to the central shaft, wherein the central shaft comprises: an outer shaft for non-rotative supporting of the wire roll; a middle shaft, concentrically arranged inside the outer shaft, for coupling and rotation of the expandable shaft; an inner shaft with a tip, concentrically arranged inside the middle shaft, for coaxially coupling to the expandable shaft, for contracting said expandable shaft while the wire roll is moved from the expandable shaft to the roll remover shaft.

[0010] One of the ideal solutions comprises an industrial robot/device with an EOAT which removes one coil and engages the wire to the twisting machine so it can restart, with the possibility to check the weight and length of the end product.

[0011] When developing this solution, we aimed for the simplest and most robust possible. For that we used a KUKA KR90R3700 prime robot (most standard, with given proof of its reliability, high reach (3,7m) and that with two robots on the same rail they can work with 24 machines simultaneously.

[0012] This solution was only possible due to the development and optimization of a tool (main goal of patent) which when linked to the freedom that the robot gives, other standard equipment's and solutions for conveyors, fences, security equipment and a lot of software programming, will allow for a robotized line which works with 24 twisting machines simultaneously 24/7 with low number of failure and malfunctions, lowering the need of up to 90% the amount of operators and when intertwined with an ERP

(Enterprise Resource Planning) allows the management and control of the production with a “Just in time” methodology.

[0013] In sum this solution would be able to remove a finished coil of wire, restart the twister machine for continuous production, and place the coil in a conveyor for further operations. Some images of real layouts from factories with the given solution in place to ease the understanding of the solution mentioned.

[0014] Advantage(s) of the new solution over the best existing solution:

Allows to simultaneously work with more twisting machines;

Simpler and sturdier tool, having a simpler tool gives less failures and easier fix, losing less time and money;

Expandability and adaptability to the dimension/no of machines to work with;

Adaptability of the solution to work with more/less machines, and to the several brands and models of twisting machines available on the market;

Allowance to work with different models of machines simultaneously;

Less amount of space needed due to the high rail where the robot will be assembled;

Allows to cooperatively work with operators with safety, due to the solution where the robot is on high ground, KUKA Safe Operation Software and Safety Laser Scanner in motion with the robot;

Reduction up to 90% of operators needed comparatively to the current solution which is totally manually;

“In Line” quality control, by measuring the weight, length and the diameter, calculated by mathematical approach, of the wire coil;

Confirmation of correct product with the assistance of a database and respective production order, giving lesser number of non-compliance products;

Integration with ERP and trackability.

[0015] The present disclosure relates to a device for automatically collecting a wire roll from a wire twisting machine comprising: an expandable shaft for winding the wire, comprising: a central shaft that is responsible for collecting the wire roll and for operating the expandable shaft; a roll remover extendable arm to remove the wire roll from the expandable roll shaft, wherein it has an forearm that guides the wire and makes sure it reattaches it to the expandable shaft to begin the manufacture of a new

wire roll; a cradle-holder comprising an extendable arm and a stopper, to lift the spreader of wire and stabilize the cradle; a cut handler that has the task to cut the wire at the time this is required to finish the cycle of the tool; and a central shaft comprising: an outer shaft to support the wire rolls on the EOAT (End Of Arm Tool); a middle shaft, concentrically arranged inside the outer shaft, to give rotation to the expandable shaft; and an inner shaft with an air pressure inflator tip connected to a pneumatic cylinder, concentrically coupled inside the middle shaft, for coaxial coupling to the expandable roll shaft for retracting said expandable roll shaft.

[0016] An embodiment comprises a device for automatically collecting a wire roll of a cradle from a wire twisting machine comprising: an expandable shaft for winding the wire, comprising: a central shaft for collecting the wire roll and for operating the expandable shaft; a roll remover extendable arm for moving the wire roll from the expandable shaft to the central shaft; a cradle-holder comprising an extendable arm and a stopper for holding the cradle stable while the wire roll is moved from the expandable shaft to the central shaft, wherein the central shaft comprises: an outer shaft for non-rotative supporting of the wire roll; a middle shaft, concentrically arranged inside the outer shaft, for coupling and rotation of the expandable shaft; an inner shaft with a tip, concentrically arranged inside the middle shaft, for coaxially coupling to the expandable shaft, for contracting said expandable shaft while the wire roll is moved from the expandable shaft to the roll remover shaft.

[0017] In an embodiment, the device for collecting wire rolls from the cradle of a wire twisting machine comprises a cut handler for holding the wire for coupling to expandable roll shaft and cutting the wire to separate the removed wire roll at the central shaft from the twisting machine.

[0018] In an embodiment, said cut handler comprising cutting means for cutting the wire roll end.

[0019] In an embodiment, said cutting means is a sheet metal with a heated blind blade, a laser, a pneumatic scissors or combinations thereof.

[0020] In an embodiment, the inner shaft tip is an air pressure inflator tip for inflating the expandable shaft after the wire roll is moved from the expandable shaft to the central shaft.

[0021] In an embodiment, the extendable arm comprising a rotationally extendable forearm with a wire grappler and a rotatable bar for pulling the wire roll from the expandable shaft to the central shaft.

[0022] In an embodiment, the rotatable bar is coupled to the extendable forearm for rotating about a transversal horizontal axis.

[0023] In an embodiment, said inner shaft comprising a conical fitting concentrically arranged with an air pressure inflator tip, the inner shaft and a pneumatic cylinder.

[0024] In an embodiment, said middle shaft comprising a socket and a spring arranged for coaxial coupling to said middle shaft.

[0025] In an embodiment, said middle shaft comprising a socket and a spring with a connector piece for linear guidance and transmission of rotation from the middle shaft to the socket.

[0026] In an embodiment, the expandable roll shaft is manually, hydraulically, pneumatically or electrically actuatable.

[0027] It is also disclosed a wire twisting machine an expandable shaft arranged to fit with a device for collecting wire rolls of a cradle having a central shaft for collecting wire rolls and for operating the expandable shaft; a roll remover extendable arm for moving the wire roll from the expandable shaft to the central shaft; a cradle-holder comprising an extendable arm and a stopper for holding the cradle stably while the wire roll is moved from the expandable shaft to the central shaft, described in any of the previous embodiments.

[0028] It is also disclosed a method for obtaining a retrofitted wire twisting machine having an expandable shaft, with a device for collecting wire rolls of a cradle, the method comprising: fitting said wire twisting machine with the device described in any of the previous claims to obtain a device for collecting a wire roll of a cradle from a wire twisting machine according to any of the previous embodiments.

[0029] In an embodiment, the process for reattaching the wire uses the grappler for easier control of the wire position with the aid of the range provided by the extendable forearm, the wire is placed to touch the end of the expandable roll shaft and then the roll remover extendable arm will go forward whilst the expandable roll shaft rotates, from the movement provided by the central shaft, so that the wire gets grasped inside the pins of the expandable roll shaft. After a brief advance from the roll remover extendable arm, it stops but the expandable roll shaft does not, making sure that the wire becomes entangled in itself and only then it is made the cut process.

[0030] In an embodiment, the method for collecting a wire roll from a cradle of a wire twisting machine with an expandable shaft further comprising using the wire grappler for reattaching the wire by the extendable forearm wherein the wire is placed for touching the end of the expandable shaft and for the roll remover extendable arm going forward whilst the expandable shaft rotates from the movement provided by the central shaft so the wire gets grasped inside a pins of the expandable shaft.

[0031] In an embodiment, the method for the reattaching of the wire by the extendable forearm grappler comprises using the reach of the forearm provided by a pneumatic cylinder to place the grappler in a position that allows the wire to come across the expandable roll shaft, that with the assistance of its rotation and the movement of the roll remover extendable arm forward the wire gets attached between the pins of the expandable roll shaft, placed at its end, and with this the wire is already intertwined in itself, allowing for the cut process to take place.

Brief Description of the Drawings

[0032] The following figures provide preferred embodiments for illustrating the description and should not be seen as limiting the scope of invention.

[0033] **Figure 1** is a schematic representation of an embodiment of the device for collecting a wire roll of a cradle from a wire twisting machine, where:

1 represents a roll remover extendable arm;

2 represents a central shaft;

3 represents a cut handler;

4 represents a cradle-holder comprising an extendable arm and a stopper.

[0034] **Figure 2** is a schematic representation of an embodiment of the movements of some of the components, where:

MR1 represents the rotation on the middle shaft of the central shaft to ensure the lock and rotation of the expandable roll shaft;

MR2 represents the rotation made to the forearm on the roll remover extendable arm in order to catch the wire and making it go through the cut handler and expandable roll shaft;

MR3 represents the rotation by the sheet metal bar that was designed with the task of transferring the roll from the expandable roll shaft to the central shaft on the EOAT, this transfer is also associated with the movement from ML1;

ML1 represents the linear movement responsible for the increased reach to the far end of the cradle giving the ability to remove the wire roll;

ML2 represents the linear motion provided from an air actuator to make the forearm from the roll remover extendable arm reach further with the wire locked on its hand;

ML3 represents the linear motion made by the inner shaft, that concentrically inside the central shaft that will activate the valve inside the expandable roll shaft;

ML4 represents the linear movement provided by an actuator on the cut-handler so that it catches the wire to give a bigger assistance and granting higher reliability to the cut of the wire;

ML5 represents the linear movement provided by an actuator on the cut-handler to cut the wire;

ML6 represents the linear motion assisted by a pneumatic actuator and a linear guide and respective rail for an easier access to the spreader and to stabilize the cradle.

[0035] **Figure 3** is a schematic representation of an embodiment of the cradle-holder.

[0036] **Figure 4** is a schematic representation of an embodiment of cut-handler.

[0037] **Figure 5** is a schematic representation of an embodiment of the central shaft, where:

5 represents an outer shaft;

6 represents a middle shaft;

7 represents inner shaft with a tip.

[0038] **Figure 6** is a schematic representation of an exploded view of an embodiment of the central shaft, where:

8 represents a connector piece for linear guidance and transmission of rotation;

13 represents a spring;

9 represents a socket for coupling to the expandable shaft and causing rotation thereof;

10 represents the tip of the inner shaft.

[0039] **Figure 7** is a schematic representation of an embodiment of central shaft with a section view given of the configurations/positions it will make as the inner shaft extends, relative to the middle and outer shafts, for causing the expandable shaft to deflate and for inflating the expandable shaft.

[0040] **Figure 8** is a schematic representation of an embodiment of the roll remover extendable arm before of the extended position, where:

11 represents a rotatable sheet metal bar;

12 represents a wire grappler.

[0041] **Figure 9** is a schematic representation of an embodiment of the roll remover extendable arm in the extended position, the maximum position it reaches.

[0042] **Figure 10** is a schematic representation of an embodiment of a layout with the tool in place with several twisting machines.

Detailed Description

[0043] This disclosure proposes a device and method for collecting a wire roll of a cradle, from a wire twisting machine comprising an expandable shaft for winding the wire, comprising: a central shaft for collecting the wire roll and for operating the expandable shaft; a roll remover extendable arm for moving the wire roll from the expandable shaft to the central shaft; a cradle-holder comprising an extendable arm and a stopper for holding the cradle stably while the wire roll is moved from the expandable shaft to the

central shaft, wherein the central shaft comprises: an outer shaft for non-rotative supporting of the wire roll; a middle shaft, concentrically arranged inside the outer shaft, for coupling and rotation of the expandable shaft; an inner shaft with a tip, concentrically arranged inside the middle shaft, for coaxially coupling to the expandable shaft, for contracting said expandable shaft while the wire roll is moved from the expandable shaft to the roll remover shaft.

[0044] Wire Cut System (Cut handler) – Small device, custom made to cut the wire from the finished coil so that the twisting machine can manufacture another coil.

[0045] Twisting Machine Connection System – Compact solution which will perform several operations with limitations, namely:

Lock system for the twisting machine cradle;

Rotation system for the expandable roll shaft, this part will be responsible to roll wire on the expandable roll shaft automatically allowing the twisting machine to start manufacturing a new roll of wire.

Control system for the expandable roll shaft which will inflate and deflate the shaft. It will deflate so the ended coil of wire is removed and will also inflate for the manufacture of a new rolled wire so the twisting machine can continue its work.

Coil support, roughly explained is the shell of where the whole system will be contained, for compactness to the system and bearing for the wire coil;

Needs to be smaller than the pneumatic expandable roll shaft expanded.

[0046] This device was engineered so that the EOAT could be as smaller as possible. With so many operations inside a Ø50mm tube it gives us some space to shrink the EOAT's size.

[0047] Wire Puller System (cut handler) – Complementary engine responsible of catching the wire simultaneously to the roll remover extendable arm, aiding the wire cut, by tensioning the wire for a better control of the cut, avoiding failure. This system works parallel to a tilting system that works as a brake so that the cut wire will not go loose.

[0048] Roll Remover Extendable Arm– A servo motorized mechanical shaft that rotates and allows to effectively pull the coil with minimum to zero margin of error without damaging the coil of wire.

[0049] The solution for this operation was designed to be as small as possible but sturdier enough to be able to pull the coil of wire. Also, since the coil will be close to the surface of the aluminium profile, it needs to be as flat as possible.

[0050] Expandable Roll Shaft – The twisting machine needs an expandable roll shaft to be replaced from the fixed shaft, so it is compatible with the EOAT.

[0051] As illustrated in **Figure 1**, the solution presented with the device groups surrounded by different lines.

[0052] In **Figure 2** is shown the movements made by the presented solution.

[0053] As illustrated in **Figure 3**, a solution for the cradle-holder with its shim and the movement it can make.

[0054] As illustrated in **Figure 4**, a solution for the cut handler and its allowed movements by both the wire puller system and the wire cut system.

[0055] As illustrated in **Figure 5**, the central shaft, and the auxiliary components it needs to work in fully, in section view for a better understanding of what is inside and how it was designed to work.

[0056] As illustrated in **Figure 6**, the exploded view of the central shaft and its components for a better understanding of what is what.

[0057] In **Figure 7** is shown a section view of the central shaft with all its linear movements comprising the movement made by the inner shaft and also the movement by the socket provided from the spring inside it.

[0058] In **Figure 8** is shown the roll remover extendable arm and all the components associated with it, in a retrieved position.

[0059] In **Figure 9** is shown the roll remover extendable arm and all the components associated with it, in an advanced position.

[0060] As illustrated in **Figure 10**, an example of a layout with the tool in place with several twisting machines and its correspondent feeders and a conveyor belt for allocation of the finished wire rolls

[0061] The term "comprising" whenever used in this document is intended to indicate the presence of stated features, integers, steps, components, but not to preclude the presence or addition of one or more other features, integers, steps, components or groups thereof.

[0062] The disclosure should not be seen in any way restricted to the embodiments described and a person with ordinary skill in the art will foresee many possibilities to modifications thereof. The above described embodiments are combinable. The following claims further set out particular embodiments of the disclosure.

C L A I M S

1. Device for automatically collecting a wire roll of a cradle, from a wire twisting machine comprising an expandable shaft for winding the wire, comprising:
a central shaft for collecting the wire roll and for operating the expandable shaft;
a roll remover extendable arm for moving the wire roll from the expandable shaft to the central shaft;
a cradle-holder comprising an extendable arm and a stopper for holding the cradle stably while the wire roll is moved from the expandable shaft to the central shaft,
wherein the central shaft comprises:
an outer shaft for non-rotative supporting of the wire roll;
a rotatable middle shaft, concentrically arranged inside the outer shaft, for coupling to and rotating the expandable shaft;
an inner shaft with a tip, concentrically arranged inside the middle shaft, for coaxially coupling to the expandable shaft with said tip, and for contracting said expandable shaft and releasing the wire roll from the expandable shaft such that the wire roll is movable from the expandable shaft to the central shaft.

2. Device according to the previous claim comprising a cut handler for holding the wire and for cutting the wire to remove the wire roll to the central shaft.

3. Device according to the previous claim wherein said cut handler comprises cutting means for cutting the wire roll end.

4. Device according to the previous claim wherein said cutting means is a sheet metal part with a heated blind blade, a laser, a pneumatic scissors, or combinations thereof.

5. Device according to any of the previous claims wherein the inner shaft tip is an air pressure deflator tip for contracting the expandable shaft, by deflating the expandable shaft, before the wire roll is moved from the expandable shaft to the central shaft.

6. Device according to any of the previous claims wherein the inner shaft tip is an air pressure inflator tip for inflating the expandable shaft after the wire roll is moved from the expandable shaft to the central shaft.

7. Device according to any of the previous claims wherein the roll remover extendable arm comprises a rotationally extendable forearm with a wire grappler and a rotatable bar for pulling the wire roll from the expandable shaft to the central shaft.

8. Device according to the previous claim wherein the extendable forearm and the rotatable bar are arranged for moving with independent movements.

9. Device according to any of the previous claims wherein the rotatable bar is transversal and coupled to the extendable forearm for rotating about a longitudinal horizontal axis of the forearm.

10. Device according to any of the previous claims wherein said middle shaft comprises a socket and a spring arranged for coaxial-resilient coupling to said expandable shaft.

11. Device according to any of the previous claims wherein said tip is an air pressure inflator and deflator tip and said inner shaft comprises an inner shaft cylinder and a conical fitting arranged concentrically between the air pressure inflator tip and the inner shaft cylinder.

12. Device according to any of the previous claims wherein the expandable shaft is manually, hydraulically, pneumatically or electrically actuatable to expand and contract when actuated.

13. Wire twisting machine comprising an expandable shaft for winding the wire, said shaft being arranged to fit with a device for automatically collecting wire roll of a cradle, from the wire twisting machine, said device having a central shaft for collecting wire rolls and for operating the expandable shaft; a roll remover extendable arm for moving the wire roll from the expandable shaft to the central

shaft; a cradle-holder comprising an extendable arm and a stopper for holding the cradle stably while the wire roll is moved from the expandable shaft to the central shaft, said device according to any of the previous claims 1 to 12.

14. Method for obtaining a retrofitted wire twisting machine having an expandable shaft for winding the wire, with a device for automatically collecting wire rolls of a cradle, from the wire twisting machine, the method comprising: fitting said wire twisting machine with the device according to any of the claims 1-12.

15. Method for automatically collecting a wire roll of a cradle, from a wire twisting machine comprising an expandable shaft for winding the wire, using a device according to any of the claims 1-12, comprising:
stabilizing the wire roll from the wire twisting machine with the cradle-holder;
coupling the central shaft to the expandable shaft of the wire twisting machine;
retracting said expandable shaft with the tip, in particular being an air pressure inflator tip;
catching the wire roll with a wire grappler;
pulling the wire roll from the expandable shaft to the central shaft with a rotatable bar;
collecting the wire roll to the central shaft;
catching the wire for cutting;
attaching the wire to the expandable shaft;
splitting the wire by cutting between the collected wire roll and the wire already attached to the expandable shaft;
triggering a lever from the twisting machine that lowers a wire spreader;
removing all device components attached to the twisting machine and start a new process of wire roll manufacturing and winding.

16. Method for automatically collecting a wire roll from a cradle of a wire twisting machine with an expandable shaft according to the previous claim, further comprising using the wire grappler for reattaching the wire by the extendable forearm wherein the wire is placed for touching the end of the expandable shaft

and for the roll remover extendable arm going forward whilst the expandable shaft rotates from the movement provided by the central shaft so the wire gets grasped inside a pins of the expandable roll shaft.

17. Method for automatically collecting a wire roll from a cradle of a wire twisting machine with an expandable shaft according to any of claims 15-16 wherein the reattaching of the wire is made by the extendable forearm grappler, using the reach of the forearm provided by a pneumatic cylinder to place the grappler in a position that allows the wire to come across the expandable roll shaft and with rotation of said expandable roll shaft the wire gets attached between the pins of the expandable roll shaft, placed at its end, and with this the wire is already intertwined in itself.

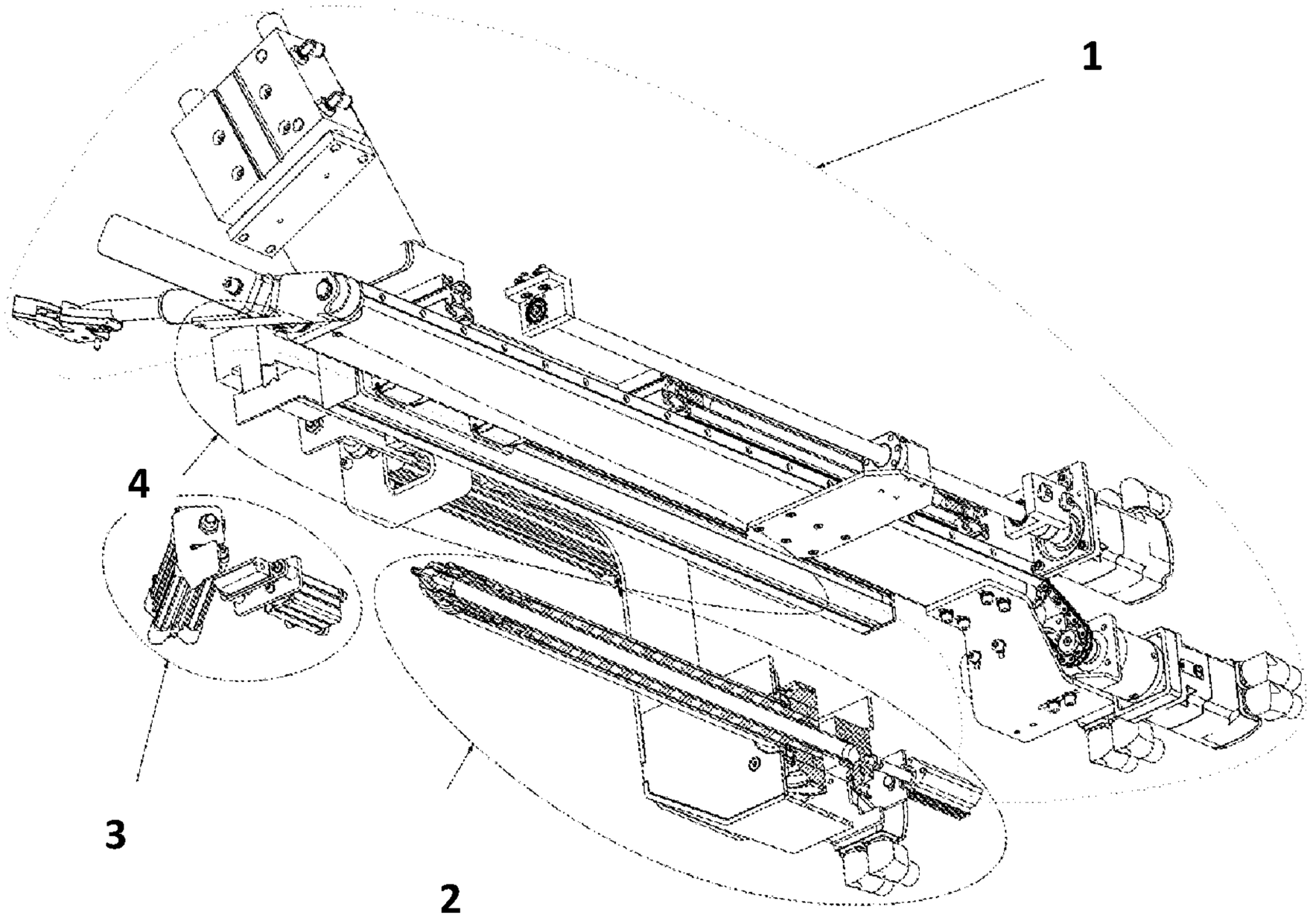

Fig. 1

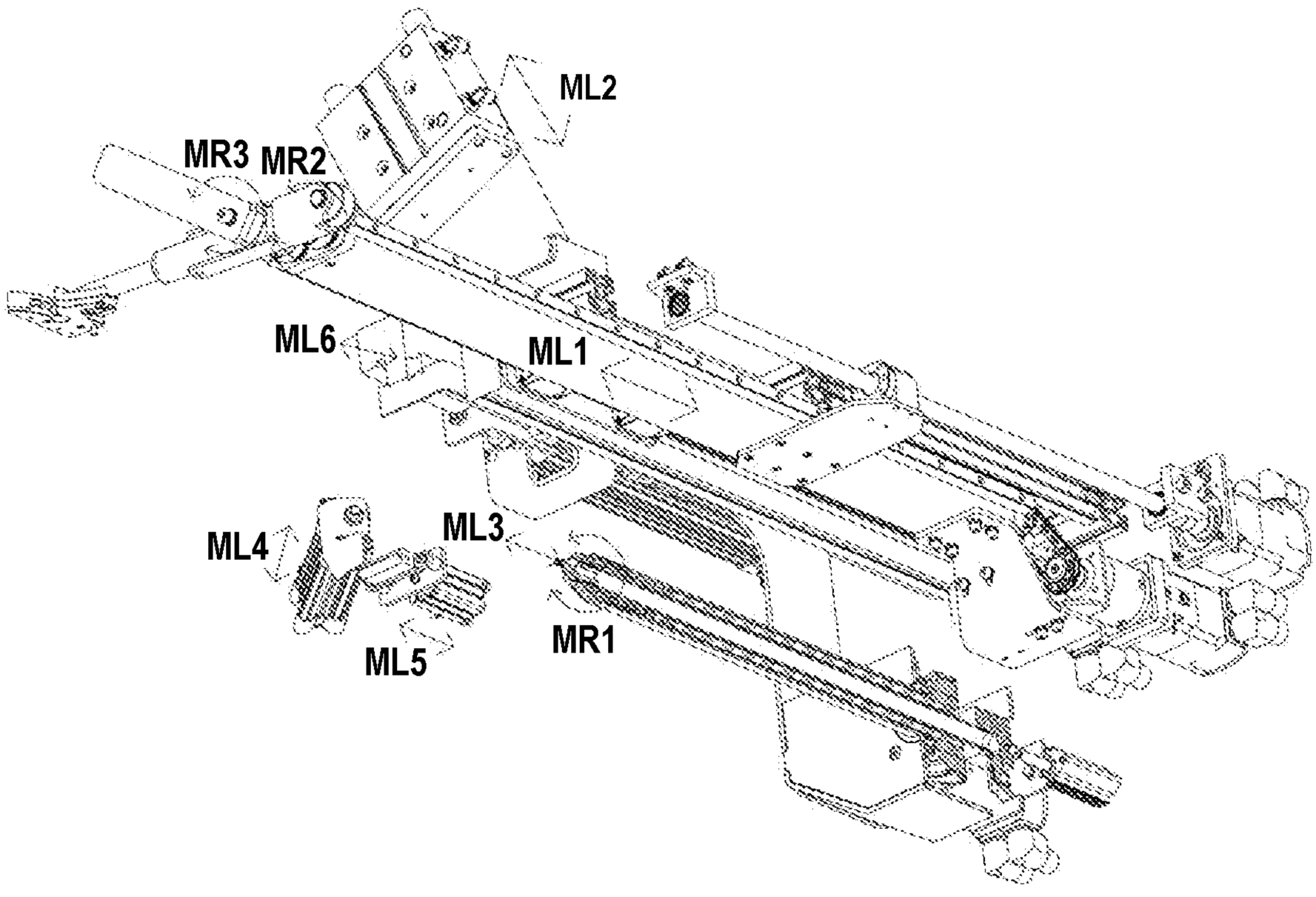

Fig. 2

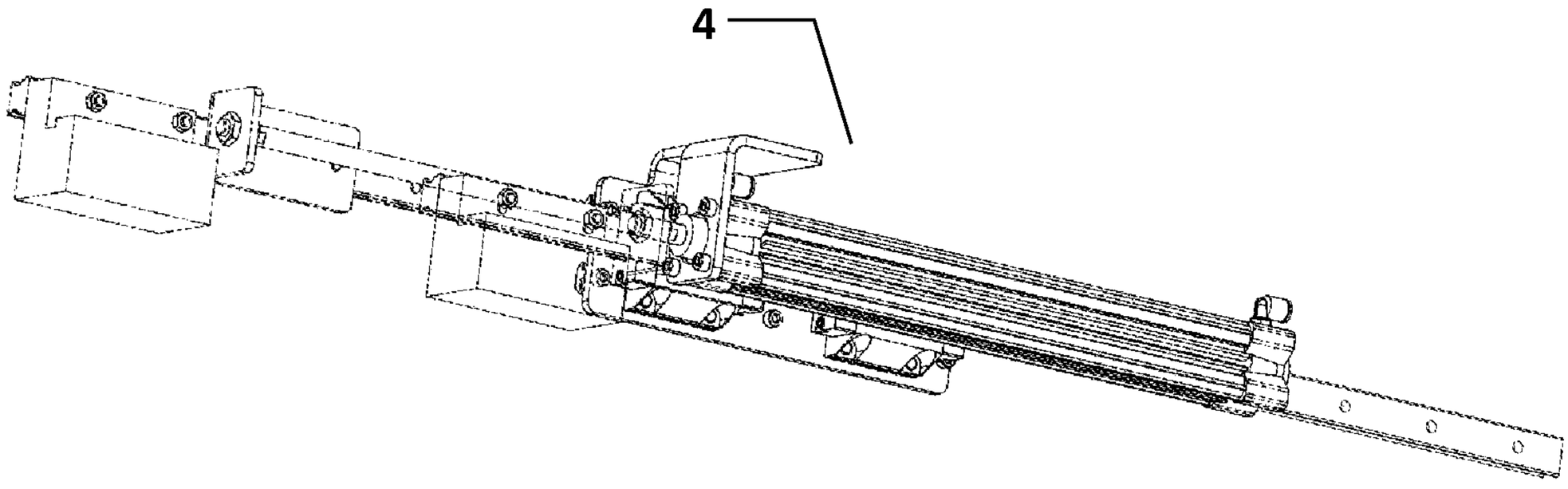

Fig. 3

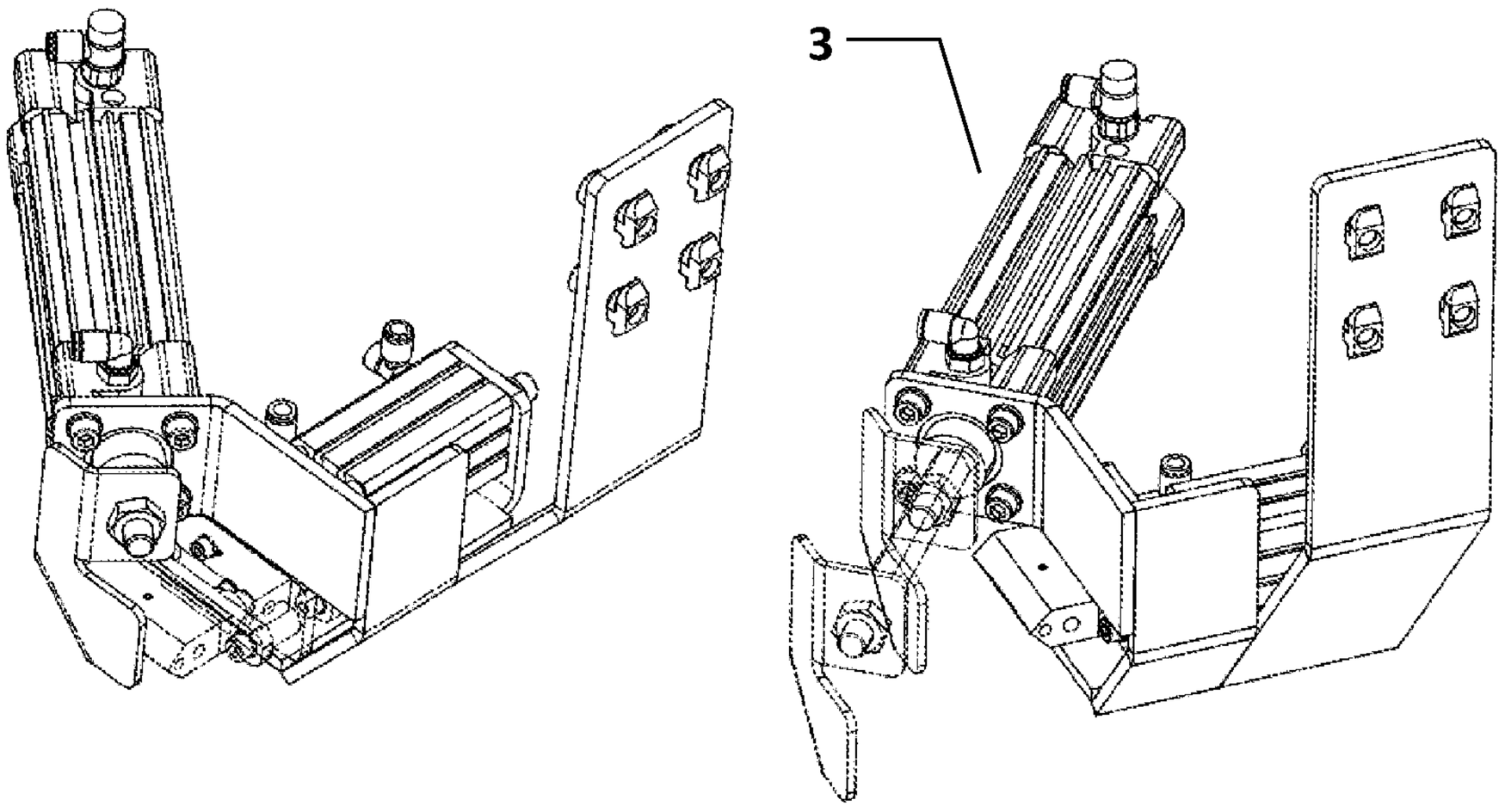

Fig. 4

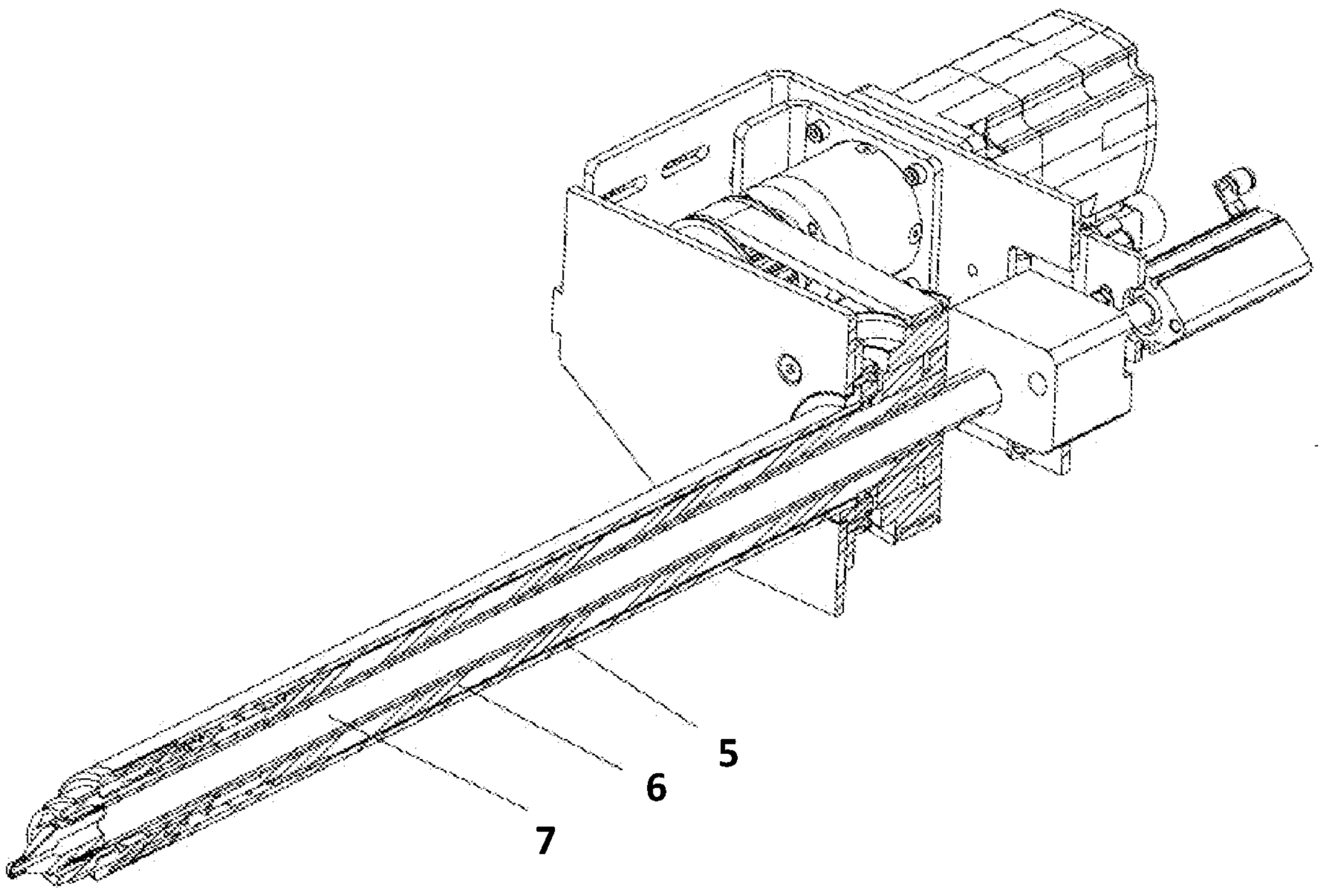

Fig. 5

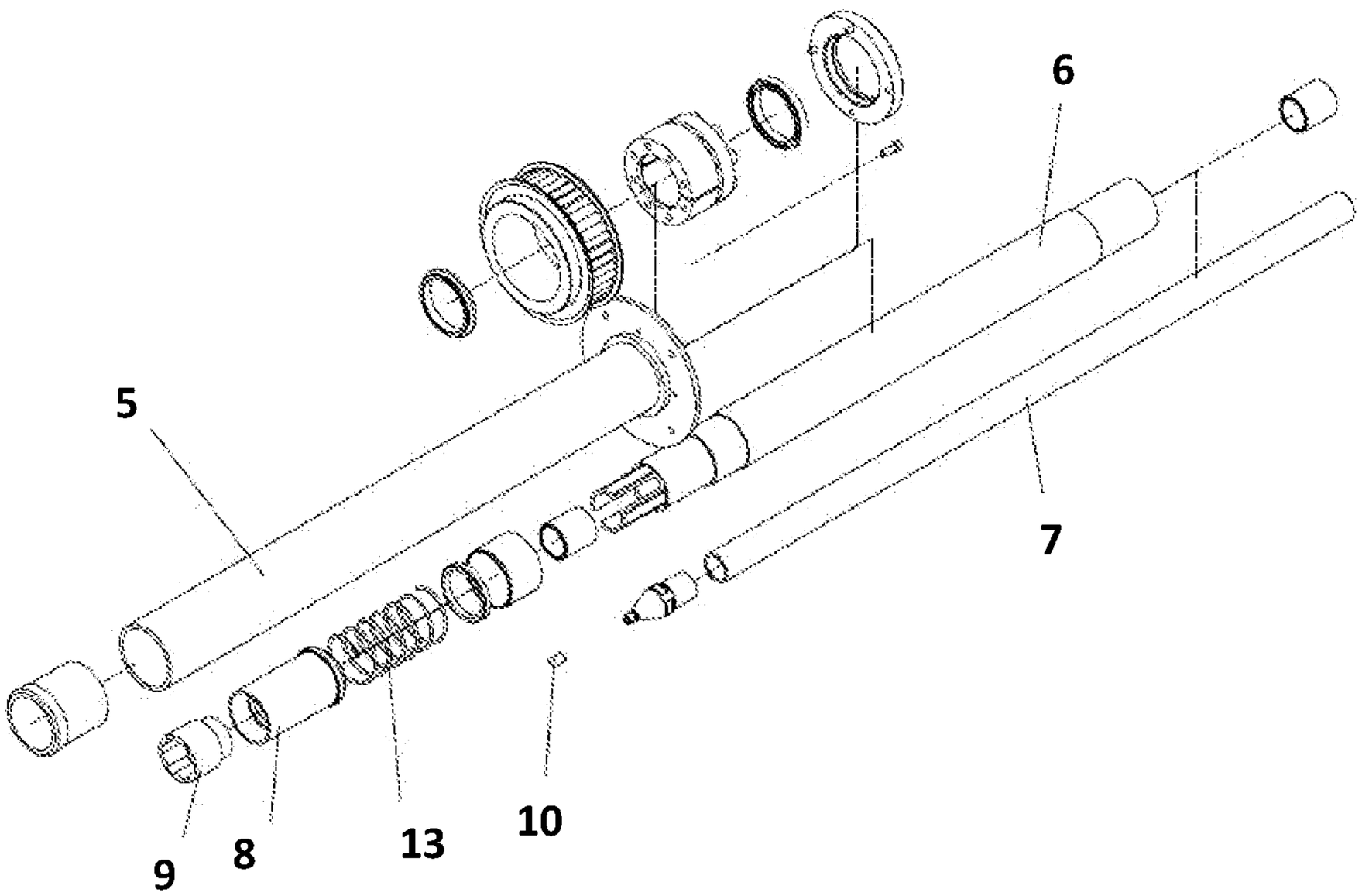

Fig. 6

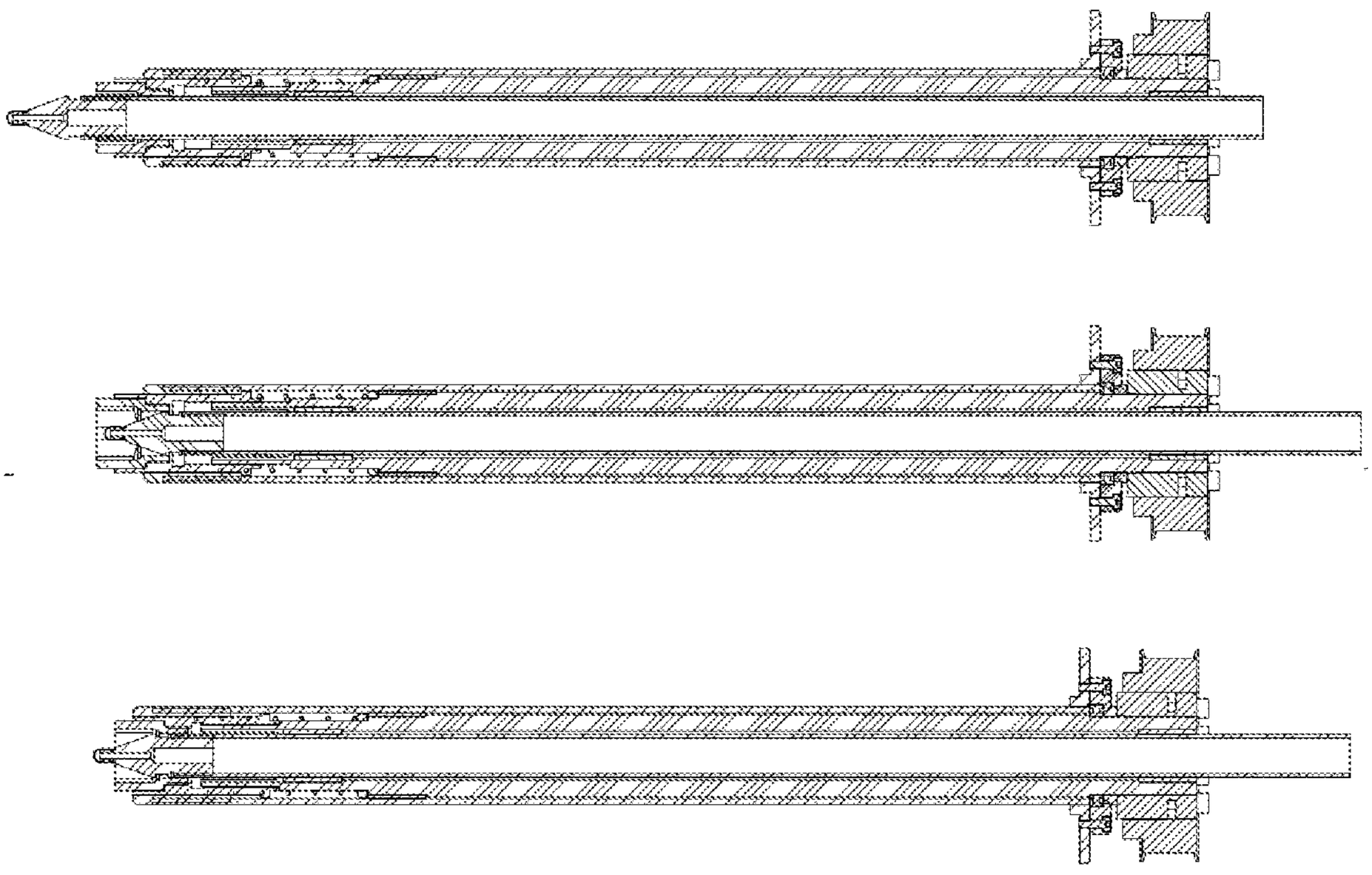

Fig. 7

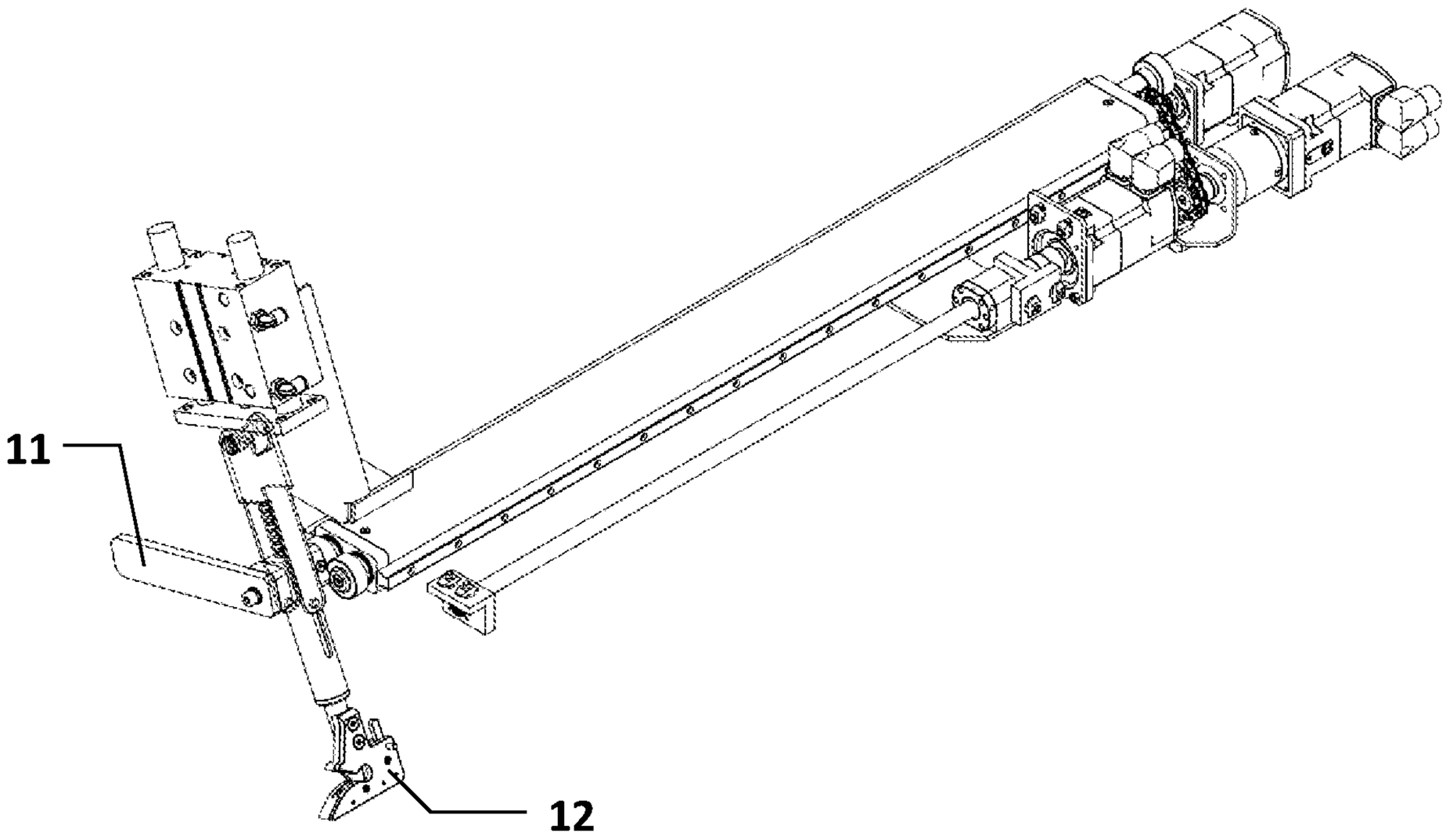

Fig. 8

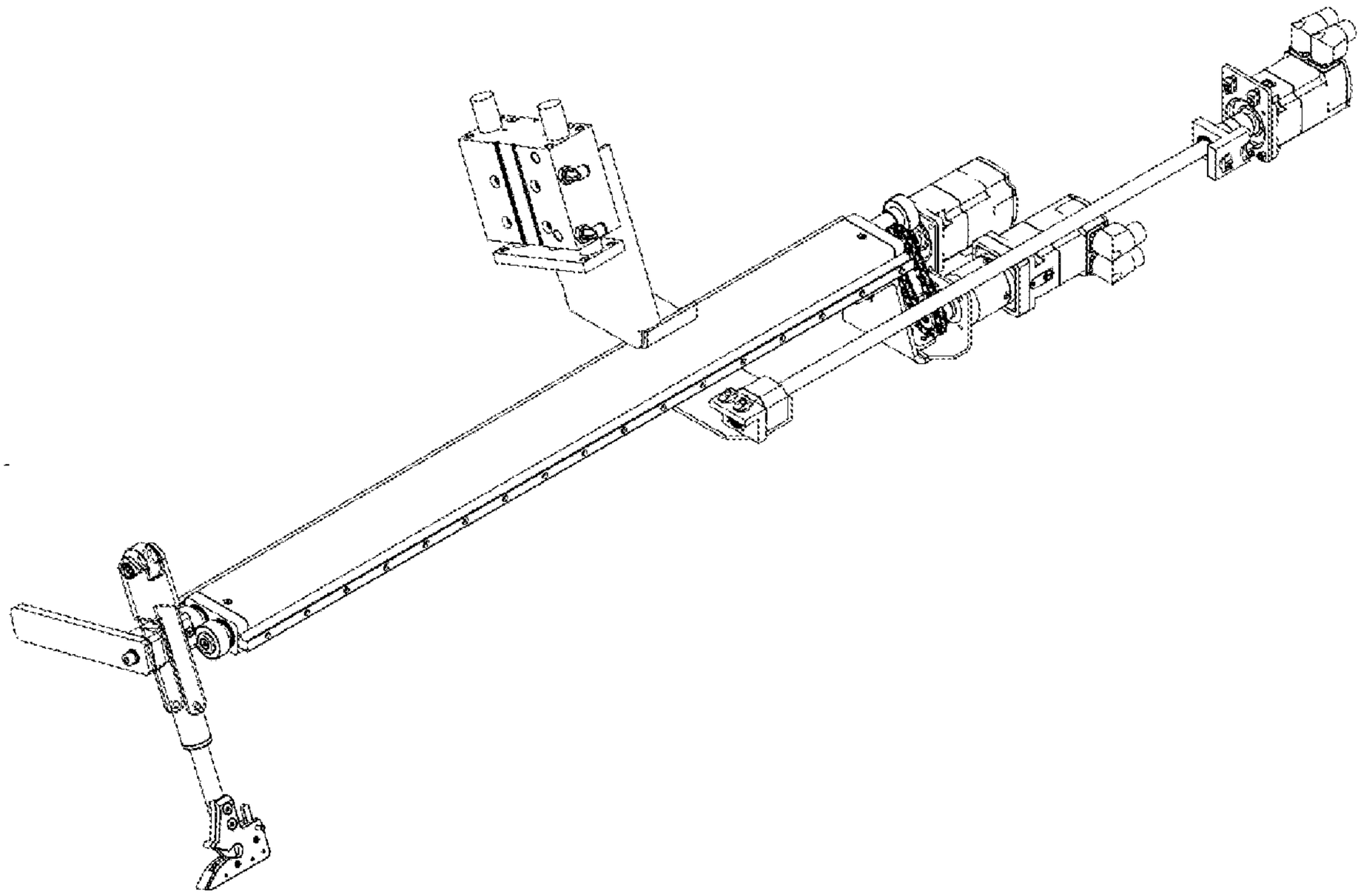

Fig. 9

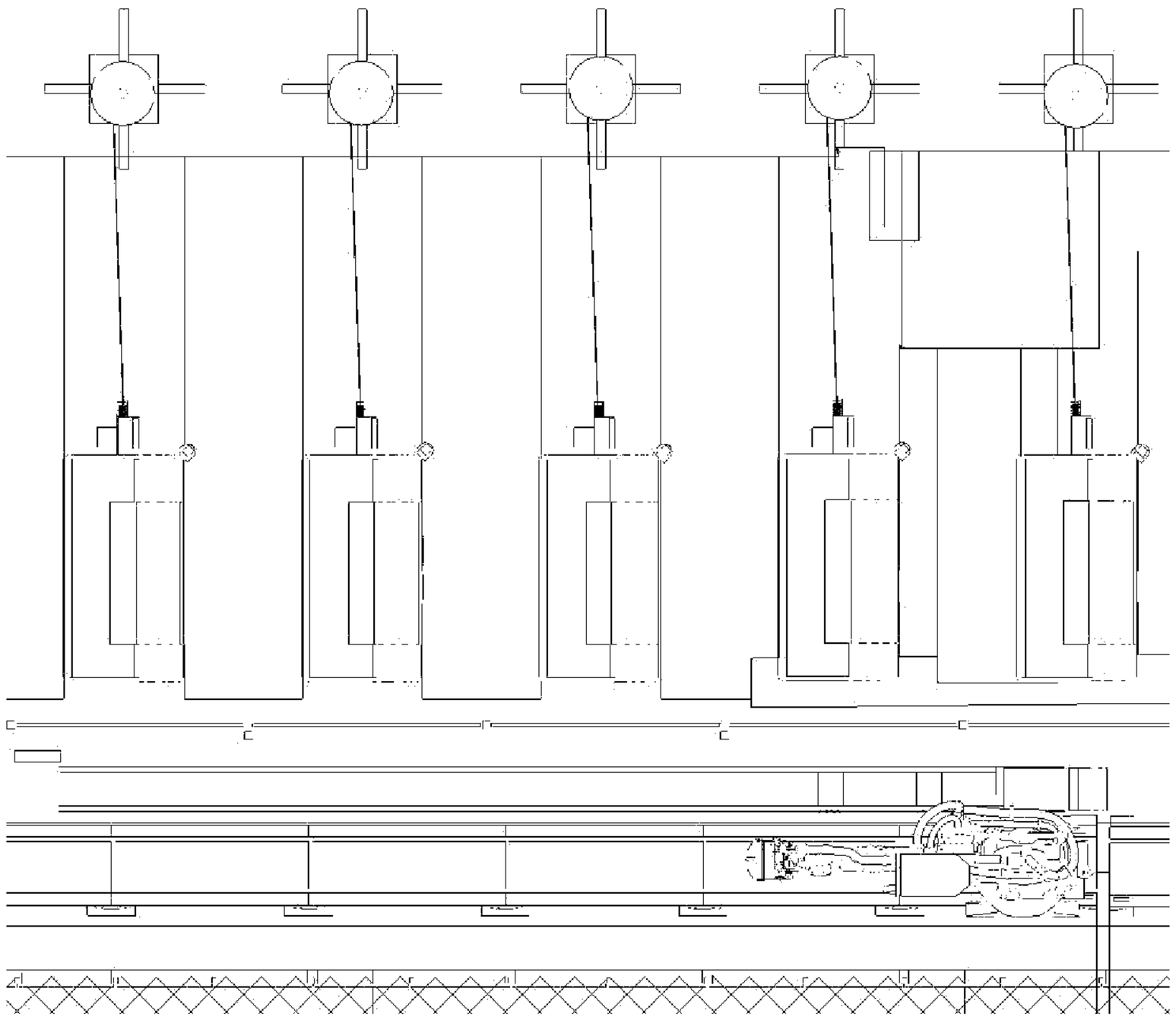

Fig. 10

INTERNATIONAL SEARCH REPORT

International application No
PCT/IB2020/062517

A. CLASSIFICATION OF SUBJECT MATTER
INV. H01B13/02 B65H75/24
ADD.

According to International Patent Classification (IPC) or to both national classification and IPC

B. FIELDS SEARCHED

Minimum documentation searched (classification system followed by classification symbols)
H01B B65H

Documentation searched other than minimum documentation to the extent that such documents are included in the fields searched

Electronic data base consulted during the international search (name of data base and, where practicable, search terms used)
EPO-Internal, WPI Data

C. DOCUMENTS CONSIDERED TO BE RELEVANT

Category*	Citation of document, with indication, where appropriate, of the relevant passages	Relevant to claim No.
A	US 6 494 401 B2 (BRADSHAW FRANKLIN C [US] ET AL) 17 December 2002 (2002-12-17) paragraph [0002] paragraphs [0029] - [0032] figures 1-2 -----	1-17
A	US 4 023 743 A (SCHIPPERS HEINZ) 17 May 1977 (1977-05-17) figures 10a-10n -----	1-17
A	EP 2 777 053 B1 (SCHLEUNIGER HOLDING AG [CH]) 30 December 2015 (2015-12-30) cited in the application figures 1-2 -----	1-17

☐ Further documents are listed in the continuation of Box C.

☒ See patent family annex.

* Special categories of cited documents :

"A" document defining the general state of the art which is not considered to be of particular relevance

"E" earlier application or patent but published on or after the international filing date

"L" document which may throw doubts on priority claim(s) or which is cited to establish the publication date of another citation or other special reason (as specified)

"O" document referring to an oral disclosure, use, exhibition or other means

"P" document published prior to the international filing date but later than the priority date claimed

"T" later document published after the international filing date or priority date and not in conflict with the application but cited to understand the principle or theory underlying the invention

"X" document of particular relevance; the claimed invention cannot be considered novel or cannot be considered to involve an inventive step when the document is taken alone

"Y" document of particular relevance; the claimed invention cannot be considered to involve an inventive step when the document is combined with one or more other such documents, such combination being obvious to a person skilled in the art

"&" document member of the same patent family

Date of the actual completion of the international search	Date of mailing of the international search report
14 April 2021	30/04/2021

Name and mailing address of the ISA/	Authorized officer
European Patent Office, P.B. 5818 Patentlaan 2 NL - 2280 HV Rijswijk Tel. (+31-70) 340-2040, Fax: (+31-70) 340-3016	Bossi, Paolo

1

INTERNATIONAL SEARCH REPORT

Information on patent family members

International application No
PCT/IB2020/062517

Patent document cited in search report	Publication date	Patent family member(s)	Publication date
US 6494401 B2	17-12-2002	NONE	
US 4023743 A	17-05-1977	CH 609645 A5	15-03-1979
		DD 121316 A1	20-07-1976
		DE 2449415 B1	24-07-1975
		JP S5184947 A	24-07-1976
		US 4023743 A	17-05-1977
EP 2777053 B1	30-12-2015	BR 112014011313 A2	16-05-2017
		CN 104025209 A	03-09-2014
		EP 2777053 A1	17-09-2014
		ES 2565068 T3	31-03-2016
		JP 6109841 B2	05-04-2017
		JP 2015504571 A	12-02-2015
		KR 20140091044 A	18-07-2014
		MX 338407 B	14-04-2016
		PL 2777053 T3	30-06-2016
		RU 2014123691 A	20-12-2015
		SG 11201402167P A	26-09-2014
		US 2015101700 A1	16-04-2015
		WO 2013068990 A1	16-05-2013