July 22, 1952 T. C. PATTON 2,603,809

FILM APPLICATOR FOR LIQUID OR VISCOUS MATERIAL

Filed Nov. 4, 1948

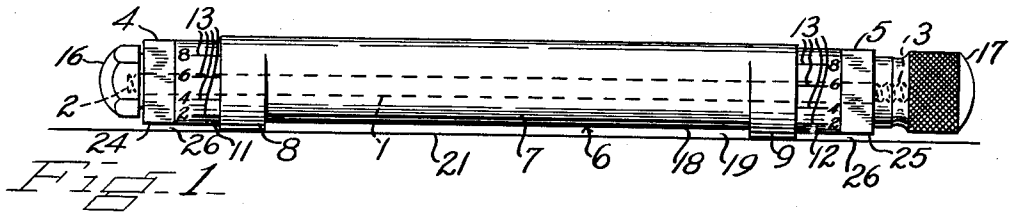

Fig. 1

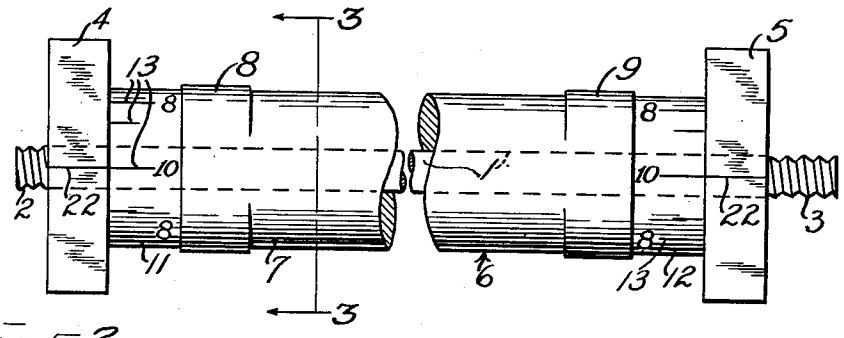

Fig. 2

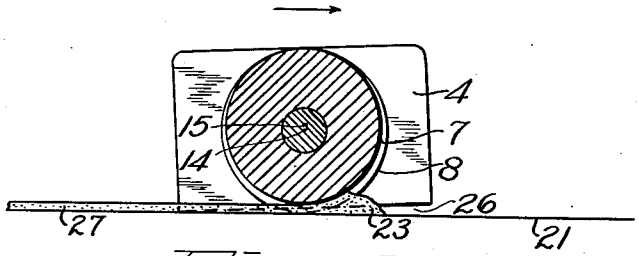

Fig. 3

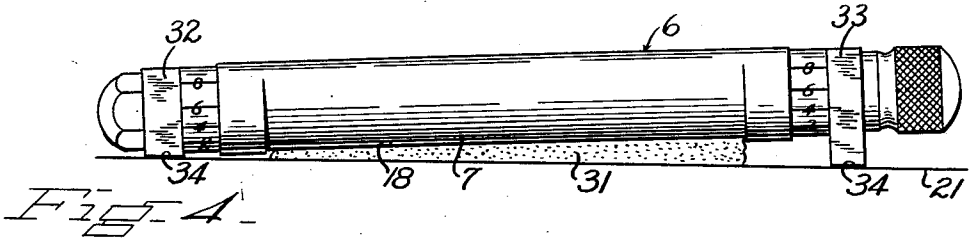

Fig. 4

INVENTOR.
TEMPLE CHAPMAN PATTON
BY Darby & Darby
ATTORNEYS

Patented July 22, 1952

2,603,809

UNITED STATES PATENT OFFICE

2,603,809

FILM APPLICATOR FOR LIQUID OR VISCOUS MATERIAL

Temple Chapman Patton, Mountainside, N. J., assignor to The Baker Castor Oil Company, Jersey City, N. J., a corporation of New Jersey

Application November 4, 1948, Serial No. 58,272

8 Claims. (Cl. 15—236)

1

This invention relates to film applicators, and more particularly to a device for laying down or "drawing down" a thin film of liquid or viscous material of accurately predetermined thickness.

The application of films of uniform thickness on a plane surface is an important laboratory operation in the technology of protective coatings. Previous methods for applying thin films for testing and other purposes included pouring, spinning, spraying, dipping and drawing down with sharp edged doctor blades. These prior methods which attempted to apply accurately predetermined thickness of films were subject to one or more disadvantages such as clumsiness of manipulation, lack of accuracy, readily damaged doctor blade, difficulty in predetermining the thickness, complicated adjustments, lack of adjustability over a range of clearances, and requirements for attachments such as feeler gages.

The film applicator of the present invention provides a sturdy device which is accurate, for example to less than .0001 inch, has an adjustable clearance, and is read directly. The device is compact and easily manipulated. The foregoing are the essential requirements of a practical film applicator, and the device of this invention fulfills all of these requirements.

The invention is illustrated in the accompanying drawing in which a present preferred embodiment is shown, and in which—

Figure 1 is a side elevational view of the applicator;

Figure 2 is an enlarged plan view of the applicator with parts broken away and removed to show the construction;

Figure 3 is a cross section taken along the line 3—3 of Figure 2; and

Figure 4 is a plan view of an alternative embodiment of the invention.

The film applicator consists of parts mounted on a central shaft 1 threaded at the respective ends 2 and 3. Mounted on the cylindrical and unthreaded portion of the central shaft 1 are end guide plates 4 and 5 extending radially and bilaterally with respect to the axis of the shaft between which extends an applicator cylinder barrel 6. The cylinder 6 comprises a central applicating or spreading section 7, shoulders 8 and 9 near each end of the cylinder 6, and beyond the shoulders are gage sections 11 and 12 having corresponding numbered graduations 13 on their respective surfaces.

The sections 8, 9, 11 and 12 of the applicator cylinder barrel 6 are all cylinders developed on the axis 14, as shown in Figure 3. The central and

2

adjustable applicating section 7 is developed on the longitudinal axis 15 which is eccentric with respect to the axis 14. As shown in Figure 1, the height of the guide plates 4 and 5 is preferably approximately identical to the diameter of the cylindrical gage sections 11 and 12 for registry therewith. The diameter of the shoulders 8 and 9 is greater than the diameter of the cylindrical surfaces adjacent thereto. Lock nuts 16 and 17 are tightened on the threaded portions 2 and 3 respectively of the shaft 1. The upper surface of the eccentric cylindrical section 7 merges into the surface of the shoulders 8 and 9, as shown in Figures 1, 2, 3 and 4, but this tangential relationship is not essential so long as the section 7 is of smaller diameter than, and lies within, the diameter of the shoulders. At the opposite or spreading surface 18 of section 7, a space 19 is defined between the lower portion of the cylindrical section 7 and the base surface 21 onto which the film of material is to be applied. Bench markings 22 are provided on the upper faces of the guide plates.

As shown in Figure 1, the shoulders 8 and 9 always rest on the surface 21. It is, of course, preferable in laying down or drawing down thin films that the surface 21 be a plane surface of glass, paperboard, enameled metal, polished metal, or other smooth plane and preferably non-absorptive material.

The applicator of this invention may be used to apply films of any desired material to be tested, and is especially useful for testing the flexibility, drying time, hiding power, etc., of liquid or viscous materials, such as paints, lacquers, drying oils, varnishes, etc.

In operation, the film applicator is first placed on a plane surface such as 21. The lock nut 17 is loosened and the barrel 6 is rotated until a desired scale marking 13 is brought even with the bench markings 22 on the guide plates 11 and 12. Rotation of the barrel 6, of course, varies the distance from the lower surface 18 of the applicator section 7 with respect to the base 21. For example, when the barrel 6 is rotated 180° from the position shown in Figure 1, there is no space between the section 7 and the base 21. To take an illustrative example, the marking graduations 13 may be so calibrated that each number adjacent thereto represents a number of mils of clearance between surface 18 and base 21, thereby predetermining the thickness of material spread or drawn down from the bank of paint or varnish 23, as shown in Figure 3. When the desired thickness of the film has thus been determined by rotation of the barrel for proper

registry of the selected mark 13 with the bench marking 22, lock nut 17 is tightened and the lower surfaces 24 and 25 of the guide plates 4 and 5 are parallel. Inasmuch as the dimension of the guide plates 4 and 5 from the center of axis 14 to the surfaces 24 and 25 is less than the radius of the shoulders 8 and 9, a space 26 is provided between the surfaces 24 and 25 on the one hand, and surface 21, on the other hand.

As shown in Figure 3, the guide plates 4 and 5 may rock slightly back and forth after the assembly is tightened, since the shoulders or rockers 8 and 9 project beyond the remainder of the surfaces of the applicator. This rocking feature is extremely important in the drawing down of films of assured accuracy. The test material 23 is poured onto the base 21 and the applicator is firmly moved in the direction shown by the arrow in Figure 3, applying uniform light pressure as the applicator is moved. As the applicator is drawn along, a film 27 of uniform thickness is produced. The fact that the applicator rides on the shoulders 8 and 9 exclusively during the drawing down process insures that appreciable variations will not occur. The spaces 26 permit very slight rocking of the guide plates, but the limit of rotation of the entire applicator on its own axis 14 is confined to a very small sector by the abutment of either end of the guide plates against the base 21. When the graduations 13 are designed for changes of thickness of .001 inch each, the differences in thickness of the space 19 are reduced to approximately .0001 inch because of the thinness of the space 26, thereby confining the rocking motion to a very small degree. The space 26 has been enlarged in the drawing relative to the actual tolerances available, in order to illustrate the operation of the device. The maximum error introduced by the use of the rocking principle has been shown to be less than 0.08 mil in the case of a typical construction, in which the diameter of the bearing shoulder is 0.5000 inch, the width of the end guides is 0.4960 inch, and the length of the end guides is 1.0 inch. The parts of the device in actual manufacture are preferably made of stainless steel which has been precision machine tooled to a tolerance of ±.0001 inch, so that the parts snugly interfit and that the operating surfaces are dimensionally accurate.

When using the first described embodiment of the invention, i. e., where a rocker action may be imparted to the guide plates, the rocker action may be readily taken advantage of by the operator in obtaining a smooth, even film. As the operator draws the applicator along the surface 21, he may slightly twist the barrel back and forth within the limits permitted by the opposite lower edges of the rockers. This avoids any tendency of the applicator to stick or catch, and assists an even rate of travel of the applicator along the base surface. Another important advantage of the rocking feature is that so long as the operator is able to rock the applicator, he is assured that the device is riding on the shoulders 8 and 9.

The embodiment of the invention shown in Figure 4 permits laying down a film 31 of graduated thickness. This embodiment is useful in testing the relative hiding power of various thicknesses of pigments in films, and for determining comparative drying rates or wrinkling characteristics of films of varying thickness. The construction shown in Figure 4 is exactly

like that shown in the first embodiment of the invention, except that the guide plates 32 and 33 are not identical to each other. Guide plate 32 is similar to guide plate 4, but guide plate 33 is of greater height thereby permitting one end of the appicator to be raised, and thereby producing the film 31 of graduated thickness.

Surfaces 34 of the guide plates 32 and 33 may be at right angles to their upright walls, or as shown in Figure 4, they may be beveled to permit plane surface contact with the base 21, rather than edge contact, which could scratch or deface the base. Guide plate 33 may, of course, be substituted for guide plate 5 by disassembling the structure shown in Figure 1, and then reassembling. In this embodiment of the invention, it is preferred that guide plate 32 shall replace the guide plate 4, for the purpose just described.

A preferred arrangement for the embodiment shown in Figure 4, i. e., to produce a wedge shaped continuous film, involves, for example, adjusting the barrel so that the left operating end thereof has a clearance of .5 mil at zero clearance setting, and using a wedge such that the right end of the operating portion of the barrel has a clearance of 4.5 mils. Then, when the applicator surface 18 is 4 inches long, the adjacent lengthwise portions of the film drawn down will have approximately one mil difference in average thickness per inch. It is also possible to adjust the barrel so that the left operating end thereof has a clearance setting of up to 10 mils—for the production of film wedges of greater thickness.

It is obvious that, if desired, linear variations may be produced in the thickness of the film as it is being produced, by rotating the barrel while it is traveling to draw the film down. Films of varied predetermined thickness may thus be drawn down rapidly and in a single operation. In fact, films having sections of four different thicknesses have been drawn down in eight seconds total elapsed time, which required three adjustments in transit.

While I have shown and described certain present preferred embodiments of the invention, it is to be understood that the invention is susceptible of other embodiments and constructions, and that the scope of the protection afforded is to be limited only in accordance with the appended claims.

What is claimed is:

1. A film applicator adapted to produce a liquid film of predetermined thickness on a flat base, which comprises a barrel section, rockers disposed near the ends of said barrel section, and a guide having a substantially straight lower edge extending bilaterally from the barrel section and spaced slightly from said base when in operating position, whereby the rocking movement of said rockers is restricted by the abutment of the ends of the lower edge of said guide against the base.

2. An adjustable film applicator adapted to produce a liquid film of predetermined thickness on a flat surface, which comprises a cylindrical spreader, cylindrical shoulders extending beyond the surface of said spreader, said shoulders having larger diameter than said spreader and being eccentric with respect to said spreader, a guide extending radially from the axis of said spreader, and means for rotatably adjusting the axial position of said spreader with respect to said guide.

3. An adjustable film applicator adapted to produce a liquid film of predetermined thickness on a flat surface, which comprises a spreader element having a curved spreading surface and curved shoulders in fixed relation to and extending beyond said spreading surface, the curvature of said shoulders being eccentric with respect to said spreading surface, a guide extending radially with respect to the axis of said spreader, and means for rotatably adjusting the axial position of said spreader with respect to said guide.

4. An adjustable film applicator useful to lay down wet films of predetermined thickness on a smooth surface, characterized by a barrel resting on cylindrical end shoulders which act as bearing surfaces, a portion of said barrel between said shoulders comprising a substantially cylindrical surface of smaller cross-section than the cross-section of said shoulders and being eccentric to the axis of said shoulders, a threaded shaft extending beyond one of said shoulders and being concentric therewith, a guide plate being positioned on said threaded shaft, said guide plate being fixed in position by a locking nut fitting said threaded shaft during use of the film applicator, said locking nut permitting change in position of the barrel relative to said guide plate when unlocked, thereby enabling the instrument to be adjusted to give a selected clearance but preventing change in position of the barrel relative to the guide plate when locked, and thereby maintaining the selected constant clearance while in use.

5. The adjustable film applicator of claim 4 in which the circumference of the eccentric central portion of said barrel is tangential at one point to the circumference of said end shoulders.

6. The adjustable film applicator of claim 4, having scale markings on the unthreaded portion of its barrel adjacent to said guide plate, said markings indicating at a given, readily observable index position the shortest distance between the surface plane on which said end shoulders rest and the plane parallel thereto, passing tangent to the surface of the eccentric portion of said barrel.

7. An adjustable film applicator comprising a barrel resting on end shoulders concentric with each other, a central shaft of reduced diameter extending from said barrel, said central shaft acting as an axis on which said barrel can be rotated, that intermediate portion of said barrel between said shoulders being precision machine tooled in such manner that the circumference of the cross-section of said intermediate portion is a circle eccentric to the axis, said eccentric circle being smaller than and tangent at one point to the circumference of the smaller cross-section of said concentric shoulders, a guide plate positioned on said shaft adjacent the end of the barrel, and means for locking the guide plate with respect to the barrel.

8. The adjustable film applicator of claim 4, having both ends of said threaded shaft extending beyond said end shoulders and two of said guide plates, said guide plates being located at opposite ends of said barrel and being positioned on the extended ends of said shaft and being substantially rectangular, the height of one of said guide plates being substantially identical with the diameter of said concentric end shoulders, and both of the cross-sectional dimensions of the second of said guide plates being greater than the diameter of said concentric end shoulders, the height of said second guide plate being greater than said diameter by an amount sufficient to give a wedge shaped clearance of desired value under the barrel surface.

TEMPLE CHAPMAN PATTON.

REFERENCES CITED

The following references are of record in the file of this patent:

UNITED STATES PATENTS

Number	Name	Date
2,436,351	Bradley	Feb. 17, 1948

OTHER REFERENCES

Circular issued by the Henry A. Gardner Laboratory, Inc. and entitled "Interchemical Direct Reading Wet Film Thickness Gage" (Figs. 1 and 2).