(12) UK Patent Application (19) GB (11) 2 147 666 A

(43) Application published 15 May 1985

(21) Application No 8326706

(22) Date of filing 6 Oct 1983

(71) Applicant
George Angus & Company Limited,
Angus House, 148-158 Westgate Road, Newcastle upon Tyne NE99 1TG

(72) Inventors
David Ernest Johnston,
Rui De Jesus Lopes

(74) Agent and/or Address for Service
Phillips & Leigh,
7 Staple Inn, Holborn, London WC1V 7QF

(51) INT CL[4]
F16J 15/16 15/32

(52) Domestic classification
F2B 13B3A7A 13B3B1A 13B3D1 13B3D2B
U1S 1810 2037 F2B

(56) Documents cited
GB 1515822
GB 1405562
GB 1330668
GB 1191685
GB 1106584
GB 0583818
GB 0578526

(58) Field of search
F2B

(54) Fluid sealing structure

(57) A structural component, such as a crankcase end cover (1) of an automobile engine, has a fluid seal, such as an oil seal (5-9), incorporated with the component by being moulded on to an inwardly-directed radial seat flange (4) of the component. Alternatively a sealing arrangement may be secured to the structural component (Fig 3).

FIG. 2

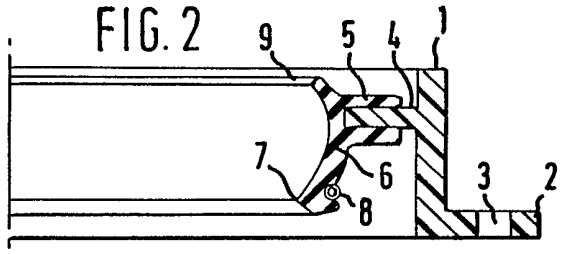

GB 2 147 666 A

FIG.1

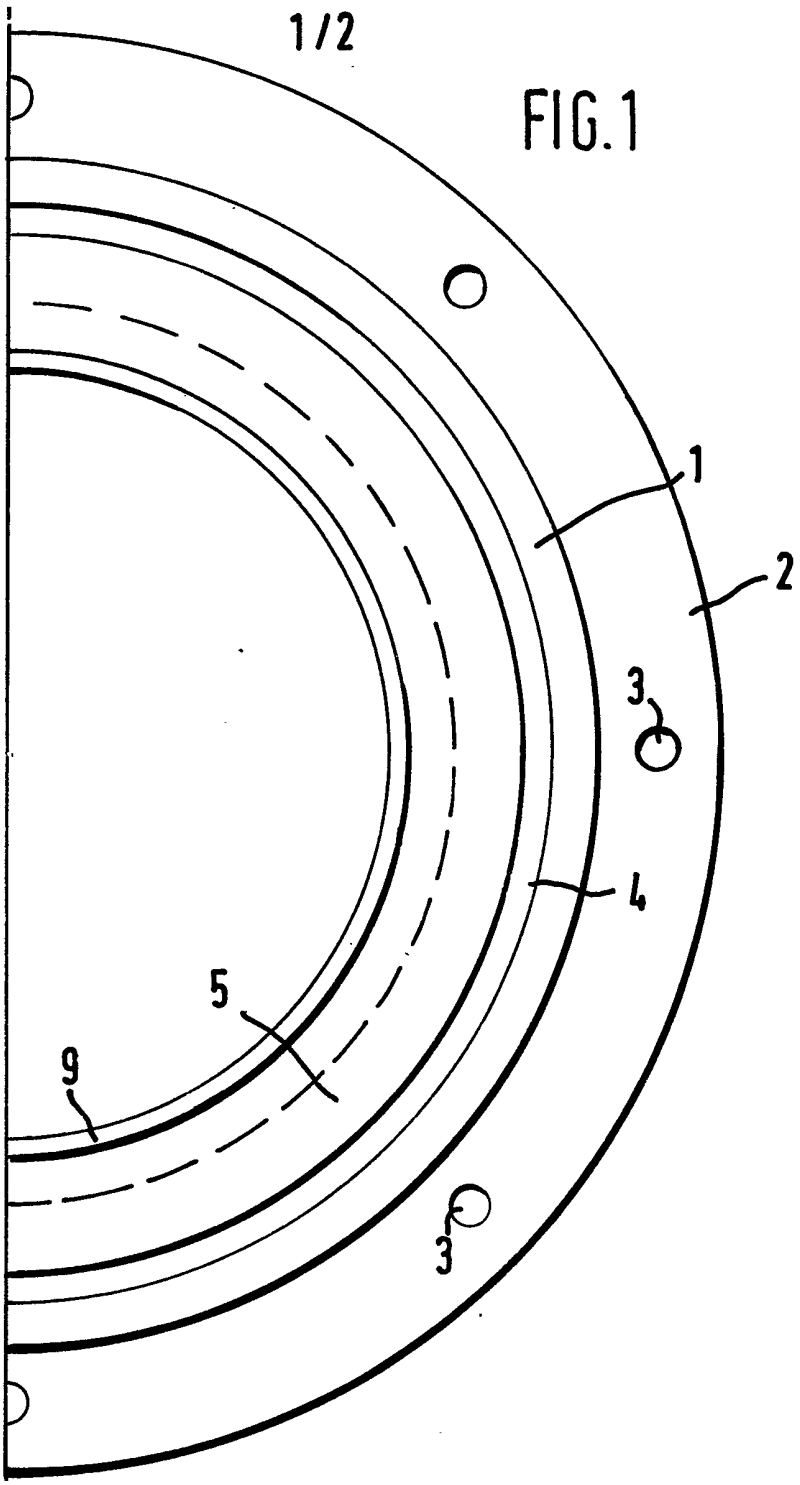

FIG.2

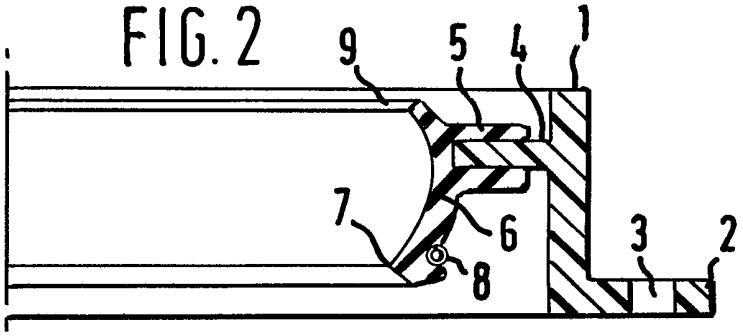

2147666

FIG. 3

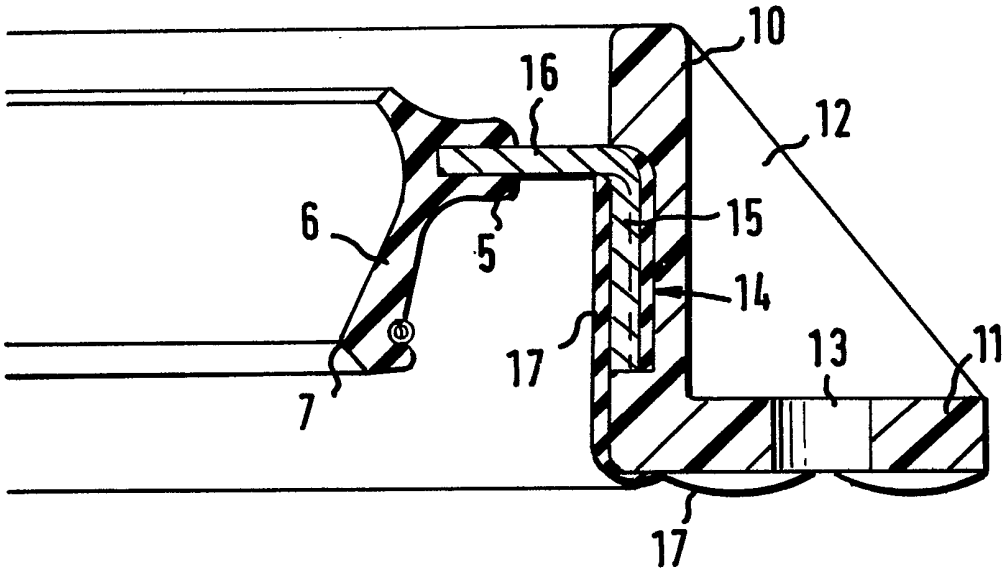

SPECIFICATION

Fluid sealing structure

This invention relates to a fluid sealing structure for mechanism, such as an automobile engine, in which a relatively movable part, for example a main driving shaft or an auxiliary shaft, passes through a structural component, such as a crankcase end cover, and must be sealed against leakage of fluid, usually oil.

Seals for this purpose, commonly called oil seals, are basically rings of elastomeric material which make a wiping seal contact, by an inner periphery, with the shaft or other member to be sealed and a static seal, by an outer periphery, in a housing recess or other seat in the structural component in which they are mounted.

The static seal of an oil seal in its housing seat is usually an interference fit. Seals may be metal cased, often with a coating of sealant, or may have an outer peripheral holding portion of elastomeric material. In either case, an oil seal must be very carefully installed so as to establish a static seal in its seat and a wiping seal with the sealed shaft or other member, without damage to any of the sealed or sealing surfaces. This requires experience, skill and care so as to establish simultaneously the wiping seal at the inner periphery and the static seal at the outer periphery of the sealing ring.

In semi-skilled, and even automated, assembly of mechanical products, the positioning of structural components, such as closing plates and covers, and securing them, by such means as screws or nuts on studs, is a straight-forward operation which can be reliably performed.

The present invention enables a corresponding, simple and reliable, operation to be employed in the installation of oil seals with consequent reliability as well as economy.

The invention comprises a structural component, for assembly with mechanism of which a relatively movable part passes through a fluid-tight seal in the component, in which an annular seat in the component, to receive a seal, has a radially inwardly directed annular flange on to which a holding portion of a seal ring is moulded so that the flange is embodied as a supporting insert in the seal ring.

In a preferred construction, the structural component is a preformed component itself moulded of plastics material.

The invention thus provides, for the installation or replacement of oil seals, or other fluid seals, instead of an oil seal to be carefully fitted into a seat in a component, a composite component itself incorporating the oil seal, or seals, for relatively simple assembly with the mechanism to be sealed.

Given the dimensional tolerance standards commonly achieved in quantity mechanical production, the assembly positioning of a structural component, such as a crankcase cover having marginal holes to fit on to mounting studs, can be relied upon to present an incorporated oil seal accurately on to the shaft or other member to be sealed.

The invention is illustrated by way of example on the accompanying drawings, in which:-

Figure 1 is a half-plan, or axial, view of a crankcase end cover with an oil seal incorporated in accordance with the invention,

Figure 2 is an axial-radial section of the crankcase cover of Fig.1, and

Figure 3 is a radial section, corresponding in part to Fig. 2, showing an alternative construction of a crankcase cover and incorporation of an oil seal.

As shown by Figs. 1 and 2, a crankcase end cover consists of a moulded plastics ring 1 having an outer peripheral flange 2 with stud holes 3 for mounting on studs of a crankcase.

To provide an annular seat for an oil seal, the crankcase end cover at its inner periphery has an inwardly directed peripheral radial flange 4. Moulded in situ on to the flange 4 is a holding portion 5 of an oil seal ring 6, moulded from an oil-resistant synthetic rubber or like elastomer, with a sealing lip 7, a garter spring 8 and a dust lip 9. The form of the oil seal ring as shown is only illustrative and any form of moulded oil seal ring can be used in accordance with known practice.

In an alternative construction shown by Fig. 3, the crankcase end cover consists of a plastics moulded ring 10 with an outer flange 11, buttressed by webs 12 at angularly spaced intervals, and stud-mounting holes 13.

To provide for an annular seal seat at its inner periphery, the ring 10 is moulded with an inner circumferential recess 14 in which the axial flange 15 of an L-section metal ring 15, 16 is set and embedded in place by an oil-resistant rubber filling 17.

On to the inner radial peripheral flange 16 of the metal ring is moulded the holding portion 5 of an oil seal ring otherwise corresponding to that of Figs. 1 and 2.

The construction illustrated by Fig. 3 enables alternative production methods to be used.

The plastics end cover ring 10 may be assembled with the L-section metal ring embedded in the recess 14 by the rubber filling 17 and then the oil seal ring moulded in situ.

Alternatively the oil seal ring first may be moulded on to the flange 16 of the L-section metal ring and then the metal ring may be assembled with the end cover ring 10.

In brief, the L-section metal ring thus constitutes a sub-component of the end cover ring and enables pre-assembly with either the end cover ring or the oil seal ring to be effected.

The rubber filling 17 provides a resilient bed for the L-section metal ring and thus for the oil seal ring, permitting some yielding to accommodate for sealed shaft alignment or eccentricity.

The rubber filling 17 is shown extending as a cushion facing 17 round the bend and over the outer end surface of the cover ring flange 11. This provides for sealing and, if desired, some degree of resilience in the fitting of the end cover on to the crankcase.

CLAIMS

1. A structural component for assembly with mechanism of which a relatively movable part passes through a fluid-tight seal in the component, in which an annular seat in the component, to receive a seal, has a radially inwardly directed annular flange on to which a holding portion of a seal ring is moulded so that the flange is embodied as a supporting insert in the seal ring.

2. A structural component according to claim 1, in which the component is a preformed component itself moulded of plastics material.

3. A structural component according to claim 1 or 2, in which the flange on to which the seal ring is moulded is a flange formed integrally with the component and on to which the seal ring is moulded in situ.

4. A structural component according to claim 1 or 2, in which the flange on to which the seal ring is moulded is part of a sub-component of the structural component and on to which the seal ring is moulded before or after assembly of the sub-component with the structural component.

5. A structural component incorporating a fluid seal substantially as described with reference to the accompanying drawings.

6. A crankcase end cover ring incorporating an oil seal substantially as shown by Figs. 1 and 2 or Fig. 3 of the accompanying drawings and described with reference thereto.

Printed in the UK for HMSO, D8818935, 3/85, 7102.
Published by The Patent Office, 25 Southampton Buildings, London, WC2A 1AY, from which copies may be obtained.