H. S. WILLIAMS.

HOT AIR HEATER.

APPLICATION FILED OCT. 30, 1912.

1,169,448. Patented Jan. 25, 1916.

Fig. 1.

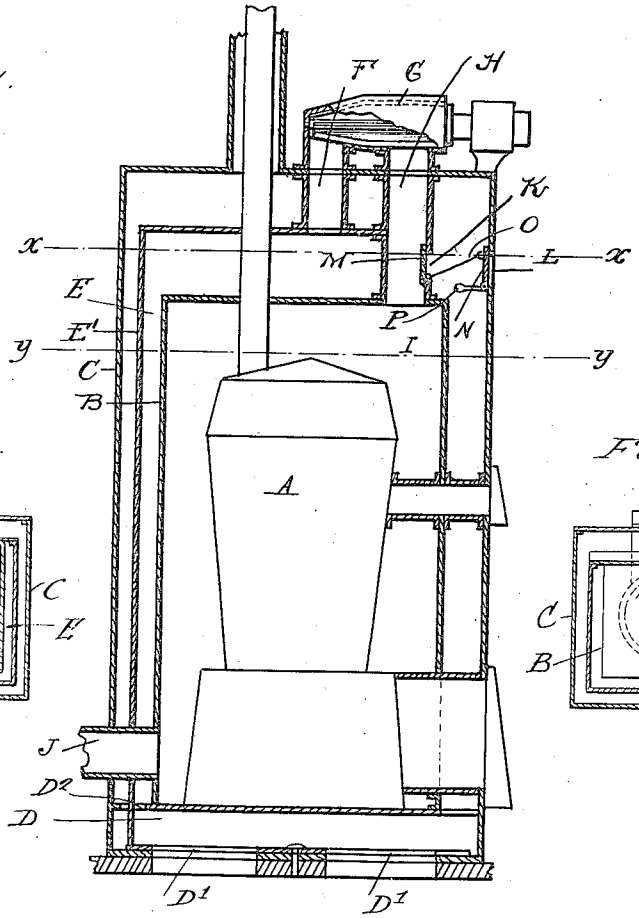


Fig. 3.

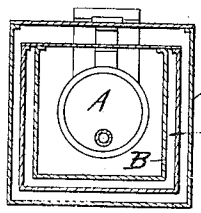


Fig. 4.

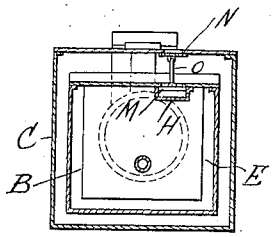


Fig. 2.

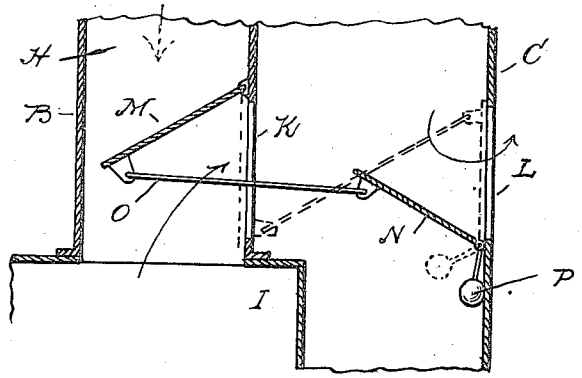


Witnesses
W. K. Ford
C. B. Belknap

Inventor
Harry S. Williams
By Whittemore Hulbert & Whittemore
Atty's

# UNITED STATES PATENT OFFICE.

HARRY S. WILLIAMS, OF DETROIT, MICHIGAN, ASSIGNOR TO PETER SMITH HEATER COMPANY, OF DETROIT, MICHIGAN, A CORPORATION OF MICHIGAN.

## HOT-AIR HEATER.

1,169,448. Specification of Letters Patent. Patented Jan. 25, 1916.

Application filed October 30, 1912. Serial No. 728,653.

*To all whom it may concern:*

Be it known that I, HARRY S. WILLIAMS, a citizen of the United States of America, residing at Detroit, in the county of Wayne and State of Michigan, have invented certain new and useful Improvements in Hot-Air Heaters, of which the following is a specification, reference being had therein to the accompanying drawings.

The invention relates to hot air heaters of that type in which the circulation of the air over the heating surface and to the point of distribution is mechanically propelled by a fan or equivalent device, the construction being particularly adapted for car heaters. With heaters of this type it is usual to force air downward through the heater, or in opposition to the natural circulation by gravity, in order that it may be conducted through conduits near the floor of the car. If, however, the fan is stopped as, for instance, where the trolley is disconnected, the air will not circulate but will be trapped in the heating chamber.

It is the object of the present invention to provide automatic means for establishing a gravity air circulation whenever the fan is inoperative, and to this end the invention consists in the construction as hereinafter set forth, described and claimed.

In the drawings: Figure 1 is a vertical central section through a heater provided with my improvement, showing the parts in normal position where the fan is in operation. Fig. 2 is a similar view, showing the automatic adjustment for establishing gravity circulation. Fig. 3 is a cross section of the heater taken on the line *y—y* of Fig. 1, and Fig. 4 is a cross section taken on the line *x—x* of Fig. 1.

A is a stove of any suitable construction and B is a surrounding casing therefor.

C designates an outer casing. At the base of the stove is an air inlet chamber D, said chamber being provided with inlet openings D′ and outlet openings $D^2$ communicating with the space between the inner casing B and the outer casing C. A motor driven fan G is mounted on the top of the casing C. The inlet to the casing of the fan G communicates with the space between the inner and outer casings B and C, and the outlet from the casing of the fan is connected by a conduit H with the top of the chamber I within the inner casing B.

J is the heat distributing conduit connecting with the lower end of the chamber I, the arrangement being such that when the fan G is in operation, air will be drawn from the chamber D upward through the space between the inner and outer casings B and C and then forced downwardly through the inner chamber I to the distributing conduit.

In the particular embodiment of the invention illustrated in the drawings, an intermediate casing E′ is provided forming with the inner casing B an intermediate chamber E in direct communication through the openings $D^2$ with the air inlet chamber D, and also in communication with the inlet of the fan casing by a conduit F. In this particular construction, when the motor is operated to drive the fan G the air is drawn through the lower openings D′ in the chamber D upwardly into the chamber E, being heated in its upward travel, and the air thence passes through the conduit F to the inlet of the casing of the fan G, and is forced through the fan casing downwardly through the inner chamber I to the distributing conduit J.

To permit of a gravity circulation when the fan G is out of operation means is provided for affording a communication between the inner chamber I and the atmosphere. For this purpose openings K and L are provided respectively in the conduit H and in the casing C, and dampers M and N are employed to control said openings which are arranged in horizontal alinement with each other. The dampers M and N, which are in the form of plates and are pivotally connected at one end to the wall of the outer casing C and to the wall of the conduit H respectively, are suitably connected together so that the opening of one will compel a corresponding opening of the other. In the drawings the connection is shown as a rod O pivotally connected at opposite ends with the respective dampers. The dampers M and N are adapted to be moved to the open position indicated in Fig. 2 when the fan is out of operation, and as will be understood when the dampers are in this position the hot air from the chamber I passes out through the openings K and L.

In order to provide for the automatic operation of the dampers they are counterweighted, so that they will be opened by gravity, and the damper M is so hinged that

in its open position it will obstruct the conduit H.

P designates a counterweight connected with the damper N. Thus, with the dampers M and N in open position as indicated in Fig. 2 of the drawings, whenever air is forced through the conduit H by the operation of the fan, the pressure of air against the damper M will force the same to its closed position, and through the connecting rod O will simultaneously close the damper N against the action of the counterweight P. This position of the parts, as shown in Fig. 1 of the drawings, will be maintained as long as the air is propelled by the fan, but upon the stopping of the circulation by the fan, the dampers M and N will be automatically opened by the counterweight P, and a gravity circulation permitted.

It will be observed that the damper M when in open position and extending inwardly across the conduit F serves additionally in that particular as a damper for the conduit itself and also acts as a deflector to direct the hot air out through the opening K. This position of parts will be maintained as long as the air is propelled by the fan, but upon the stopping of the circulation the dampers will automatically open, permitting a gravity circulation, the hot air from the chamber I passing outward through the aperture K and registering aperture L.

It will be noted that the present invention provides means for propelling air through the casing the air propelled acting upon one of a plurality of connected members and controls an inlet to the casing. The arrangement is such that the action of the blast will immediately move both members simultaneously to close the openings.

What I claim as my invention is:

1. The combination with a hot air heater having an outer and an inner heating chamber, of a mechanically-operated fan for drawing air from said outer chamber and forcing it downwardly into said inner chamber, a conduit passing through said outer chamber and connecting with the upper end of said inner chamber, through which the air is forced downward, and a pair of connected dampers controlling registering openings in said conduit and outer casing, and adapted to automatically open to provide an exit for the heated air, the inner damper when open obstructing the path of air through said conduit, whereby said dampers will be closed when the air is mechanically propelled.

2. The combination with a hot air heater having inner and outer heating chambers, of a fan for drawing air from the outer chamber and forcing it downwardly through the inner chamber, a conduit through which the air is propelled, passing through said outer chamber and connecting with the upper end of said inner chamber, a damper in said conduit controlling a lateral opening therein, and in its open position obstructing said conduit, a damper controlling an opening in the outer casing and connected with the first-mentioned damper to operate simultaneously therewith, and means for automatically opening said dampers, said means adapted to be overcome by the force of air against the inner damper when the fan is in operation.

3. A heater of the character specified comprising an inner casing, a heating element arranged therein, an outer casing, means for causing the air to circulate through the outer casing inwardly into and through the inner casing, there being a hot air outlet from the inner casing, said inner casing and outer casing having openings whereby communication may be established between the inner casing and the atmosphere, a plurality of connected damper members operated simultaneously by the blast of air from said air circulating means to cut off communication between the inner casing and the atmosphere, and a weight acting simultaneously upon both of said damper members when the circulating means is idle to establish communication between said inner casing and the atmosphere.

4. A heater including an inner casing; a heat producing element arranged in said casing, an outer casing surrounding the inner casing, the outer casing and inner casing each having a natural draft egress opening, vertically swinging members, a connection between the members whereby the same move simultaneously, one of said members forming a closure for the egress opening in the outer casing and the other forming a closure for the egress opening in the inner casing, a fan for forcibly introducing air into the upper part of the inner casing and downwardly through the same, the inner casing being provided at its bottom with a hot air outlet, the blast from said fan acting to operate the connected members whereby the same close the egress openings in the outer casing and inner casing, and means acting upon said members when the fan is idle to simultaneously open the egress openings to allow for a natural draft circulation.

5. A heater including an outer casing and an inner casing, a mechanically operated fan for forcing air into and downwardly through said inner casing, the inner casing and outer casing each being formed with a natural draft egress opening, a heating element arranged within the inner casing, the inner casing at its base being provided with an outlet for the heated air which is forced downwardly through the same by said fan, a conduit passing through the outer casing and communicating with the inner casing, the blast from the fan passing through said con-

duit, a pair of connected dampers one of which controls the conduit passage and the egress opening of the inner casing, the other of said dampers controlling the egress opening of the outer casing, a weight acting simultaneously upon both of said members when the fan is idle to establish communication through the egress openings between the outer casing and the atmosphere, the first mentioned damper member when in open position obstructing the conduit passage whereby the air is deflected through the egress opening of the inner casing.

6. A heater including an inner casing, a heating element therein, an outer casing surrounding the inner casing, air propelling means for causing air to circulate through the inner casing, there being communicating openings, one of said openings being formed in the outer casing and the other communicating with the inner casing, said openings serving to vent the inner casing through the outer casing to the external atmosphere, a damper controlling the opening communicating with the inner casing and automatically closed by the blast of air from the air propelling means, and means for automatically opening said damper when the air propelling means is out of operation.

7. A heater including an inner casing, a heating element therein, an outer casing surrounding the inner casing, air propelling means having a duct leading therefrom through the outer casing and communicating with the inner casing adjacent the top thereof, a vent in the duct for communicating with the external atmosphere whereby the inner casing may be vented through the duct to the external atmosphere, a damper controlling said vent and automatically closed by the blast of air passing through said duct, and means for automatically opening said damper when the air propelling means is out of operation.

In testimony whereof I affix my signature in presence of two witnesses.

HARRY S. WILLIAMS.

Witnesses:
WM. J. BELKNAP,
JAMES P. BARRY.