Feb. 16, 1965 W. H. McKEE 3,169,817

CLOSED-ENTRY CONTACT COMPONENT

Filed June 19, 1961

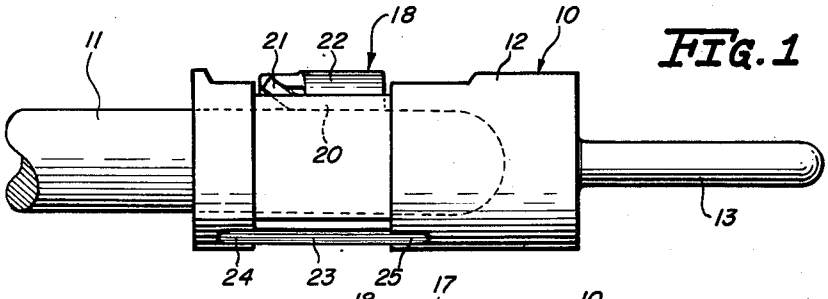

FIG. 1

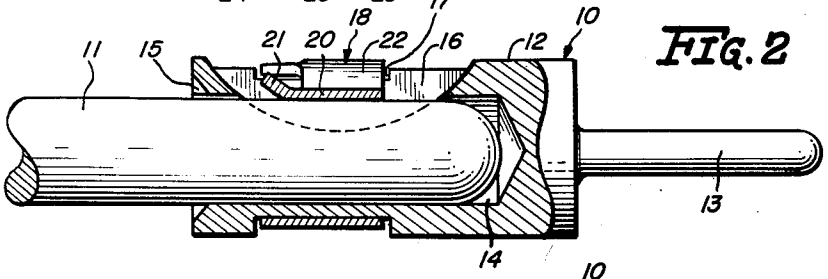

FIG. 2

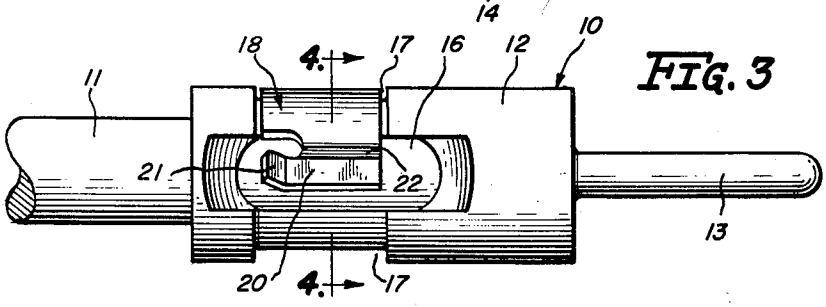

FIG. 3

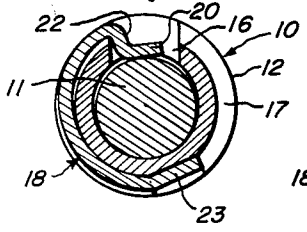

FIG. 4

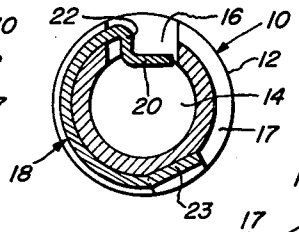

FIG. 5

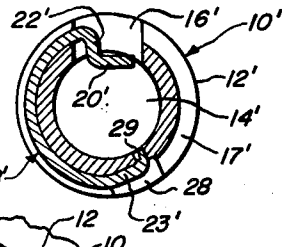

FIG. 5a

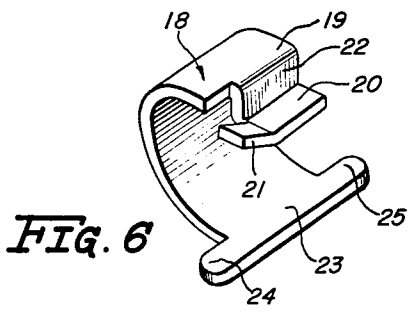

FIG. 6

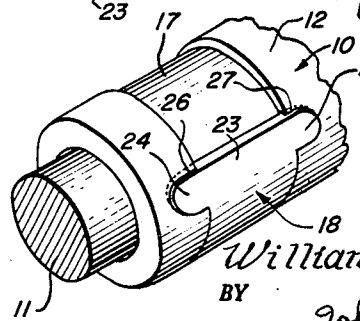

FIG. 7

INVENTOR.
William H. McKee
BY
John Todd
Atty.

United States Patent Office 3,169,817 Patented Feb. 16, 1965

3,169,817

CLOSED-ENTRY CONTACT COMPONENT

William H. McKee, West Covina, Calif., assignor to United Carr Fastener Corporation, Boston, Mass., a corporation of Delaware

Filed June 19, 1961, Ser. No. 117,970
2 Claims. (Cl. 339—256)

This invention relates to a contact structure adapted for use in a multiple contact connector, and more particularly to the female or closed-entry contact component of a closed-entry contact structure which typically comprises cooperating male and female components.

The customary multiple contact connector comprises two cooperating elements—one of which is a connector body section equipped with multiple rows of female contact components, and the other of which also includes a connector body section equipped with multiple rows of male contact components respectively alignable with the female components for establishing an electrical connection therewith when the two body sections are brought into cooperating adjacency. All of the individual male and female contact components are adapted to be respectively connected to lead wires so that a plurality of electric circuit connections are effected between corresponding lead wires through the mating male and female contact components when the body sections are brought together. Each pair of male and female contact components together define a contact structure; and in a closed-entry contact structure, the male component is equipped with an elongated prong adapted to be received within a complementary socket therefor provided by the female component. The quality of the electric connection effectuated between any two mating components is dependent upon the establishment of a good frictional engagement between the prong and socket, and the quality of such frictional engagement must remain high through repeated insertions and removals of the prong from the socket.

An object of the present invention is to provide a closed-entry contact structure adapted for use in multiple contact connectors, and in which a good frictional and electrical connection is defined between the male and female components both initially and after long periods of use during which the components are separated and reconnected numerous times. Another object of the invention is that of providing a female or closed-entry contact component having a resiliently supported contact finger adapted to frictionally engage the prong of a male contact component inserted into the socket of the female component and thereby establish an electrical connection therebetween, and in which the contact finger and associated structure is characterized by having an exceedingly good life cycle.

Still another object is in the provision of a closed-entry contact component having a prong-engaging contact finger and resilient support therefor, in which the frictional retention forces imparted to such prong by the contact finger are quite positive because the radial displacement of the contact finger upon insertion of the prong is characterized by a simple bending action, and in which the magnitude of such frictional forces is determined and controlled through selection of two dimensions of the contact finger and its support structure.

Yet another object is to provide a closed-entry contact component of the character described, in which the contact finger and its support structure comprise a spring clip circumjacent a portion of the socket-defining barrel of the component—the contact finger being bodily displaceable in a radial direction against the resilience of the clip upon insertion of such prong into the socket, the life cycle of the spring clip being increased because

the deflection resulting from such prong insertion occurs along the entire length of the clip.

A further object is to provide a structure of the type described wherein the clip is a separate structural element formed independently of the socket-defining barrel of the component wherefore the clip may be formed from a different material and/or processed by different treatments, thereby augmenting the life cycle and spring-like characteristics thereof—the clip being of such character that it may be completely formed when originally made thereby obviating secondary forming operations which are usually required when separate contact fingers are used in conjunction with closed-entry contact components, the clip nevertheless being quickly and easily mounted upon the contact component barrel with a simple snap action. Additional objects and advantages of the invention will become apparent as the specification develops.

Embodiments of the invention are illustrated in the accompanying drawing, in which—

FIGURE 1 is a broken side view in elevation of a contact structure illustrating a closed-entry contact component embodying the invention and a prong component inserted thereinto; FIGURE 2 is a longitudinally sectional view partly in elevation of the contact structure shown in FIGURE 1; FIGURE 3 is a top plan view of the contact structure shown in FIGURE 1; FIGURE 4 is a transverse sectional view taken along the line 4—4 of FIGURE 3; FIGURE 5 is a transverse sectional view similar to that of FIGURE 4, but illustrating the closed-entry contact component when the prong is removed from the socket thereof; FIGURE 5*a* is a transverse sectional view similar to that of FIGURE 5, but showing a slightly modified construction; FIGURE 6 is a perspective view of the clip element comprising a part of the structural composition illustrated in FIGURES 1 through 5; and FIGURE 7 is a broken perspective view of the contact structure shown in FIGURES 1 through 4 illustrating the lower or underside thereof.

The closed-entry contact structure illustrated in FIGURES 1 through 3 includes a female or socket component **10** and a partially shown male component having a prong **11**. The component **10** has a longitudinally extending barrel **12** adapted to be inserted into the body section (not shown) of longitudinally extending tail **13** which may have a variety of forms and is adapted to be connected to a wire conductor. The barrel **12** has a cylindrical configuration, and is provided with a centrally disposed, longitudinally extending bore or socket **14** having a widened mouth **15** at the entrance thereof to facilitate insertion of the prong **11** into the socket. The component **10** is formed of a conductive material and is adapted to establish an electrical connection with the prong **11**.

Along one side the barrel **12** is provided with a slot **16** which is radially disposed, extends longitudinally along the barrel, and communicates with the socket **14**. Extending circumferentially about the barrel **12** and in alignment with the slot **16** is a channel **17** which is somewhat shorter in the longitudinal direction than the slot **16**. Mounted within the channel **17** is a clip **18** adapted to cooperate with the prong **11** in frictionally retaining the same within the socket **14** and in effecting a good electrical connection between the prong **11** and barrel **12** of the female contact component.

As is shown most clearly in FIGURES 4 through 6, the clip **18** has a generally C-shaped configuration and the radius thereof is such that it substantially conforms to the cylindrical surface portion of the channel **17** with which it is circumjacent. The clip **18** has a terminal end portion **19** equipped with a contact finger **20** which ex-

tends inwardly through the slot 16 and into the interior of the socket 14 for engagement with the prong 11. The contact finger 20 is longitudinally extending, and the forward end 21 thereof angles upwardly and forwardly so as to facilitate insertion of the prong 11 into the socket 14. It will be noted that the contact finger 20 is an integral part of the clip 18, and is connected to the main cylindrical portion thereof through a radially and inwardly extending support or segment 22.

The opposite terminal end 23 of the clip 18 and adjacent portion of the barrel 12 (as shown best in FIGURE 7) are equipped with cooperative fastener structure that prevents lateral or transverse displacements of the clip relative to the barrel; and such fastener structure is also effective to prevent longitudinal displacements of the clip although since the clip seats within the channel 17, the walls thereof provide effective constraint preventing longitudinal movements of the clip relative to the barrel. Such fastener structure includes a pair of spaced apart and longitudinally aligned ears or tabs 24 and 25 which respectively seat within recesses 26 and 27 provided therefor by the barrel 12 along opposite edges of the channel 17. The end portion 23 of the clip 18 and cooperative fastener structure define a longitudinally extending axis about which the clip 18 pivots slightly upon insertion and removal of the prong 11 into and out of the socket 14.

A slightly modified construction is illustrated in FIGURE 5*a*, and the variation in this modification resides in the cooperative fastener structure anchoring the clip to the barrel. In this modified structure, the barrel is provided with a radially extending recess or opening 28, and the clip is provided with a lug 29 that seats within the opening 28. Thus, the clip is constrained against both transverse and longitudinal displacements by the cooperative interconnection of the lug 29 and opening 28. Since the remaining elements of the structure are the same as those heretofore described in connection with the prior embodiment, the primed form of the same numerals are employed to identify these various elements.

It is apparent from the drawing, and particularly FIGURE 5, that the clip 18 lies wholly within the peripheral limits of the barrel 12 and in no way interferes with the insertion and removal of the contact component 10 from a connector body section. Additionally, displacement of the contact finger 20 radially outwardly from the socket 14 upon insertion of the prong 11 thereinto does not appreciably change this relationship, and then the surrounding walls of such connector body section do not interfere with the proper performance of the clip 18.

In mounting the clip 18 on the barrel 12, the contact finger 20 is inserted into the slot 16 which then locates the terminal end portion 23 of the clip along the barrel but at a location angularly displaced in the clockwise direction from the position shown in FIGURES 4 and 5. A force is then applied radially inwardly against the clip at substantially the mid-point thereof, and such force urges the terminal end portion 23 along the surface of the barrel in a counter-clockwise direction (again referring to FIGURES 4 and 5) until the tabs 24 and 25 respectively seat within the recesses 26 and 27. The same mounting procedure is used in connection with the clip 18', and it may be noted that the lug 29 may be used along with the tabs 24 and 25 or as an alternative therefor.

No difficulty is experienced in inserting the prong 11 into the socket 14 because the forward end portion 21 of the contact finger extends upwardly and forwardly, and the prong 11 is thereby permitted to slide along the undersurface of the contact finger. During insertion of the prong, the contact finger 20 is displaced radially outwardly with the entire arcuate length of the clip 18 acting as a simple spring, with the pivot or spring axis thereof being the terminal end portion 23 of the clip. Consequently, the clip is deformed against the inherent spring force thereof in the manner generally illustrated in FIGURE 4. When the prong 11 is withdrawn, the clip 18 restores itself to the position shown in FIGURE 5 in which it is in substantially contiguous relation with the underlying surface of the channel 17. It should be noted that a further advantage attained by a clip construction of this type, wherein the clip functions as a spring with the pivot axis thereof being the end portion 23, is that the clip functions independently of friction developed between the circumferential surface of the barrel of the clip; and therefore the retaining action of the clip is not dependent upon forces of this type which are difficult to control because, in the conventional structure, the points at which such clip touches the barrel move about the circumference thereof and the resultant force varies from a maximum value at which the points of contact approach a separation of approximately 180° to values substantially less as the points of contact move away from diametric opposition.

From the point of view of fabrication, the structure is desirable in that the clip is completely formed when originally made, and therefore there are no secondary forming operations which have to be performed after the clip is mounted upon the barrel. This permits the clip to be made of materials having better spring characteristics, such as beryllium copper heat-treated to full hardness. As a result, a better frictional and consequently better electrical connection is defined betwen the prong 11 and contact component 12, and the excellence of such mechanical and electrical connections has substantial longevity and is maintained through repeated insertions and withdrawals of the prong 11. Additionally, control of the retention forces imparted by the clip 18 through the contact finger 20 to a prong 11 is quite positive because of the simple bending action of the clip, and there are only two basic dimensions that determine such retention forces —namely, the radius of the clip 18 and radial length of the segment 22. Thus, the retention force may be increased by reducing the clip radius and/or increasing the radial length of the segment 22; and conversely, retention forces may be reduced by changing either or both of these dimensions in the opposite direction.

While in the foregoing specification embodiments of the invention have been set forth in considerable detail for purposes of making an adequate disclosure thereof, it will be apparent to those skilled in the art that numerous changes may be made in such details without departing from the spirit and scope of the invention.

I claim:

1. A closed-entry contact component adapted for use with a prong-equipped contact component, comprising an elongated barrel provided at the forward end portion thereof with a longitudinally extending socket for removably receiving such prong therein, said barrel being provided with a longitudinally extending slot opening into said socket along one side thereof and being provided with a perimetric channel extending thereabout in alignment with said slot, an open clip mounted within said channel in circumjacent relation and generally conforming to a perimetric portion thereof and having spaced terminal end portions one of which is equipped with a contact finger extending through said slot and into said socket for frictional engagement with such prong upon insertion thereof into said socket, and fastener structure provided by said barrel and clip for securing said clip to said barrel, said fastener structure comprising a recess in said barrel intersecting said channel, and said clip having an ear extending therefrom at its end opposite said contact finger, said ear being seated within said recess, said clip being resilient and the anchorage thereof to said barrel defining an axis about which said clip can pivot upon insertion of such prong into said socket.

2. A closed-entry contact component adapted for use with a prong-equipped contact component, comprising an elongated barrel provided at the forward end portion thereof with a longitudinally extending socket for re-

movably receiving such prong therein, said barrel being provided with a longitudinally extending slot opening into said socket along one side thereof and being provided with a perimetric channel extending thereabout in alignment with said slot, an open clip mounted within said channel in circumjacent relation and generally conforming to a perimetric portion thereof and having spaced terminal end portions one of which is equipped with a contact finger extending through said slot and into said socket for frictional engagement with such prong upon insertion thereof into said socket, a fastener structure provided by said barrel and clip for securing said clip to said barrel, said fastener structure including a pair of longitudinally aligned and longitudinally extending recesses in said barrel respectively located along opposite edges of said channel and opening thereinto, and said clip being provided

with a pair of longitudinally extending ears respectively seated within said recesses, said clip being resilient and the anchorage thereof to said barrel defining an axis about which said clip can pivot upon insertion of such prong into said socket.

References Cited in the file of this patent

UNITED STATES PATENTS

1,699,678	Schellenger	Jan. 22, 1929
1,865,933	Mappes	July 5, 1932
2,380,908	Heller	July 31, 1945
2,931,003	Huetten et al.	Mar. 29, 1960

FOREIGN PATENTS

886,954	France	July 26, 1943