Aug. 22, 1950 F. E. EHLERS 2,519,750

RECTANGULAR TO CIRCULAR WAVE GUIDE JUNCTION

Filed April 7, 1945

FIG. 1

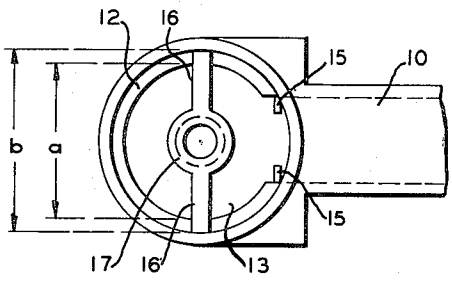


FIG. 2

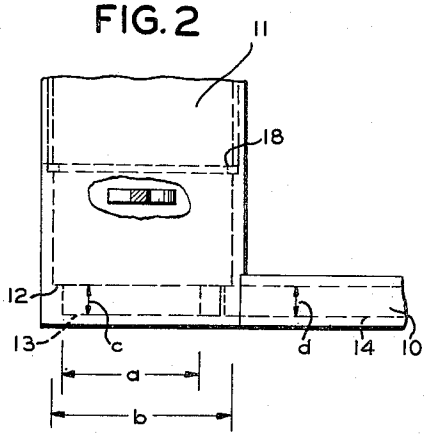


FIG. 4

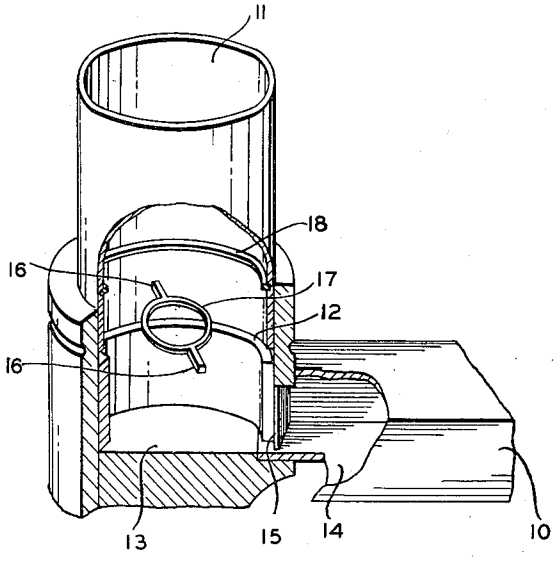


FIG. 3

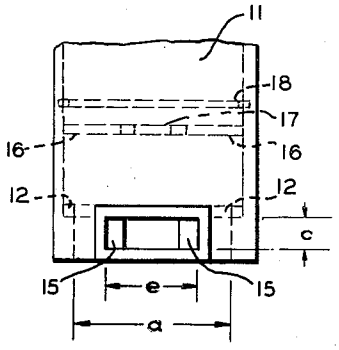


INVENTOR.
FRANCIS E. EHLERS

BY William D. Hall

ATTORNEY

Patented Aug. 22, 1950 2,519,750

# UNITED STATES PATENT OFFICE

2,519,750

## RECTANGULAR TO CIRCULAR WAVE GUIDE JUNCTION

Francis E. Ehlers, Cambridge, Mass., assignor, by mesne assignments, to the United States of America as represented by the Secretary of War

Application April 7, 1945, Serial No. 587,189

9 Claims. (Cl. 178—44)

1

This invention relates to waveguides and more particularly to means for joining a rectangular waveguide to a circular waveguide for transference of energy from one to the other.

One object of this invention is to form a junction between a rectangular waveguide and a circular waveguide such that when the transverse electric mode ($TE_{0,1}$) is propagated in the rectangular guide, the transverse magnetic mode ($TM_{0,1}$) will be propagated in the circular guide. This result is useful, for example in applications where it is desired to form a rotary joint in the circular waveguide. Other objects are to provide improved impedance match at the junction and purity of mode transmission.

Among features of this invention exhibiting improvement over previous efforts to accomplish the desired result are its simpler construction, stronger mechanical features, and better mode purity.

Further objects and advantages are apparent from a study of the device. In the drawings:

Fig. 1 is a view of a preferred embodiment of the invention looking down on the top of the rectangular waveguide showing the circular waveguide in cross section at their junction;

Fig. 2 displays a view in elevation from the side of the rectangular waveguide at its junction with the circular waveguide;

Fig. 3 is an end view looking into the junction from the end of the rectangular waveguide; and

Fig. 4 is a cutaway perspective view of the junction.

Referring now to the drawings, showing a preferred embodiment of the invention, the rectangular waveguide 10 terminates in the base of the vertically extending circular waveguide 11. The long axis of waveguide 10 is perpendicular to the long axis of waveguide 11. A junction of two waveguides with their long axes perpendicular is herein termed a right angle junction. At the base of circular waveguide 11 is a circular ledge 12, of smaller diameter $a$ than the diameter $b$ of circular waveguide 11, and concentric with it. Waveguide 10 is disposed with its broad sides lying in substantially horizontal planes. The height $c$ of ledge 12 is approximately equal to the height $d$ of rectangular waveguide 10, which is the inner height of its narrow sides. The termination of waveguide 10 at waveguide 11 is along the boundary line determined by the intersection of the internal plane surfaces of rectangular waveguide 10 with the cylinder formed by the inner surface of ledge 12. The base 13 of circular waveguide 11 under ledge 12 is flush on the inside with base 14 of rectangular waveguide 10.

At the termination of waveguide 10 adjoining waveguide 11, a pair of conductive, thin, plane-surface pieces 15 are attached to the sides of

2

waveguide 10. Pieces 15 are rectangular in shape, and extend the height $d$ along the narrow sides of waveguide 10. In the art, the opening between pieces 15 is termed a symmetric inductive window. The pieces 15, or structure forming similar symmetric inductive windows, are termed herein symmetric inductive curtains.

A resonant circular ring 17 is supported symmetrically within waveguide 11, some distance above ledge 12, by means of straight conductive strips or bars 16 which are attached to the walls of waveguide 11 and oriented perpendicular to the long axis of rectangular waveguide 10 and to the long axis of waveguide 11. Ring 17 augments the action of ledge 12 in suppressing unwanted modes.

Within circular waveguide 11, some distance above ring 17, a thin circular ring or ledge 18 is attached to the inner wall of waveguide 11, and the inner diameter of ledge 18 is adjusted to further improve the impedance match and mode purity in the circular waveguide.

Operation and design of the structure may be explained by supposing rectangular waveguide 10 to be excited in the $TE_{0,1}$ mode with electrical vectors perpendicular to its broad sides. The excitation at the junction of the two waveguides results in propagation in the circular waveguide 11, not only of the desired $TM_{0,1}$ mode, but of unwanted modes as well, unless the latter are suppressed. The diameter and exact height of ledge 12 is then chosen to give the best $TM_{0,1}$ mode purity in waveguide 11 as well as the best impedance match between the two waveguides. The resonant ring 17 is used to further suppress undesired modes, and its vertical position is chosen to give an impedance which can be matched over a broad band with the symmetric inductive window. The inner diameter and location of circular ledge 18 above ring 17 is chosen to still further improve the impedance match and the mode purity.

Due to the numerous factors involved in obtaining the optimum dimensions, empirical data is probably the best means of determining the optimum design for a desired frequency band and for given dimensions of the rectangular and circular waveguide.

A converse effect is obtained if the circular guide is excited in the $TM_{0,1}$ mode, which will result in transference of energy to the rectangular guide in the $TE_{0,1}$ mode with maximum mode purity and optimum impedance match for the device disclosed. Thus, the use of the circular ledge at the base, the resonant ring, and the circular ledge above the ring with the symmetric inductive window serves not only to give a good impedance match at the junction, but to improve the broad band response. The best results have been obtained when using all of these

devices in combination with the symmetrical inductive window. However, it is possible to obtain a portion of the desired result using only one or any combination of these. Therefore, it is not desired to restrict the claims to the exact structure as shown.

What is claimed is:

1. In a right angle junction between a rectangular waveguide and a circular waveguide wherein the wide sides of the rectangular waveguide are perpendicular to the long axis of the circular waveguide, and in which said circular waveguide has a closed base substantially flush with the bottom of the rectangular waveguide, the combination of a cylindrical ledge adjacent said base substantially equal in height to the inner narrow sides of the rectangular waveguide and concentric with the circular waveguide, said rectangular waveguide communicating with said circular waveguide through said ledge, a pair of symmetrical inductive curtains attached to the narrow sides of the rectangular waveguide in the vicinity of said circular waveguide, said curtains being oriented perpendicularly to the sides of the rectangular waveguide and extending between the broad sides of the rectangular waveguide, a ring resonant at the mid-frequency of the chosen band of operating frequencies, and two longitudinal conductive members supporting said ring in a selected position above said ledge, said members being oriented parallel to a line perpendicular to the long axis of the circular waveguide and to the long axis of the rectangular waveguide; said combination being so proportioned and placed that when electromagnetic energy is propagated toward said junction through the rectangular waveguide in the $TE_{0,1}$ mode maximum energy transference into the circular waveguide in the $TM_{0,1}$ mode is obtained.

2. The combination of claim 1, further comprising a thin, second circular ledge of conductive material attached in a selected position to the inner wall of said circular waveguide above said ring.

3. In a right angle junction of a rectangular waveguide and a circular waveguide wherein the wide sides of the rectangular waveguide are perpendicular to the long axis of the circular waveguide, the combination of means comprising an extension of the bottom of the rectangular waveguide forming a closed base for the circular waveguide, a cylindrical ledge adjacent said base substantially equal in height to the inner narrow sides of the rectangular waveguide and concentric with the circular waveguide, a pair of symmetrical inductive curtains attached to said rectangular waveguide near its junction with the circular waveguide, a resonant circular ring, and longitudinal conductive members supporting said ring symmetrically within said circular waveguide above said ledge, said combination being adapted to provide a maximum transference of electromagnetic energy propagated in the $TE_{0,1}$ mode in the rectangular waveguide to electromagnetic energy in the $TM_{0,1}$ mode in the circular waveguide.

4. The combination of claim 3, further comprising a thin second circular ledge of conductive material attached in a selected position to the inner wall of said circular waveguide above said ring.

5. In a right angle junction between a rectangular waveguide and a circular waveguide wherein the wide sides of the rectangular waveguide are perpendicular to the long axis of the circular waveguide, the combination of means affording a closed base for the circular waveguide substantially flush with the bottom of the rectangular waveguide, a cylindrical ledge in the circular waveguide adjacent the base of said circular waveguide, a pair of symmetrical inductive curtains in the rectangular waveguide near the junction with said circular waveguide, and a resonant ring symmetrically supported in said circular waveguide by two longitudinal conductive members, said combination being adapted to cause a greater transference of electromagnetic energy propagated in the $TE_{0,1}$ mode in the rectangular waveguide to electromagnetic energy in the $TM_{0,1}$ mode in the circular waveguide.

6. The combination of claim 5, further comprising a thin second circular ledge of conductive material attached in a selected position to the inner wall of said circular waveguide above said ring.

7. In a right angle junction between a rectangular waveguide and a circular waveguide wherein the wide sides of the rectangular waveguide are perpendicular to the long axis of the circular waveguide, the combination of a cylindrical ledge adjacent the base of said circular waveguide, and a pair of symmetrical inductive curtains in said rectangular waveguide near its junction with said circular waveguide, said combination being adapted to cause a greater transference of electromagnetic energy propagated in the $TE_{0,1}$ mode in the rectangular waveguide to electromagnetic energy in the $TM_{0,1}$ mode in the circular waveguide.

8. In a right angle junction between a rectangular waveguide and a circular waveguide wherein the wide sides of the rectangular waveguide are perpendicular to the long axis of the circular waveguide, means comprising a resonant ring, and two longitudinal conductive members supporting said ring symmetrically in the circular waveguide, said means being adapted to cause the maximum transference of electromagnetic energy propagated in the $TE_{0,1}$ mode in the rectangular waveguide to electromagnetic energy in the $TM_{0,1}$ mode in the circular waveguide.

9. In a right angle junction between a rectangular waveguide and a circular waveguide wherein the wide sides of the rectangular waveguide are perpendicular to the long axis of the circular waveguide, means adapted for causing a greater transference of electromagnetic energy propagated in the $TE_{0,1}$ mode in the rectangular waveguide to electromagnetic energy in the $TM_{0,1}$ mode in the circular waveguide comprising a resonant ring supported in said circular waveguide by two longitudinal members, said members being disposed perpendicular to the longitudinal axis of said rectangular waveguide and said circular waveguide, and a pair of inductive curtains in said rectangular waveguide near its junction with said circular waveguide.

FRANCIS E. EHLERS.




## REFERENCES CITED

The following references are of record in the file of this patent:

UNITED STATES PATENTS

| Number | Name | Date |
|---|---|---|
| 2,257,783 | Bowen | Oct. 7, 1941 |