United States Patent [19]

Freeman

[11] **Patent Number: Des. 284,526**

[45] **Date of Patent: ** Jul. 8, 1986**

[54] **PORTABLE DESK**

[76] Inventor: **Nettie A. Freeman**, R.R. #2, The Village, #57 Whispering Pine, Flint, Tex. 75762

[**] Term: **14 Years**

[21] Appl. No.: **470,595**

[22] Filed: **Feb. 28, 1983**

[52] **U.S. Cl.** **D3/74**; D3/30.1; D3/39; D6/406

[58] **Field of Search** D19/52, 59, 62, 36; D3/30.1, 74, 76, 33; 312/231, 237; 190/1, 10, 11; 434/432; D6/406

[56] **References Cited**

U.S. PATENT DOCUMENTS

D. 139,024	10/1944	Morando	D3/74
2,441,345	5/1948	Brubaker	D3/74
3,558,205	1/1971	Mueller	D3/74
4,190,918	3/1980	Harvell	190/1
4,194,628	3/1980	Campos	D3/74

Primary Examiner—George P. Word

Attorney, Agent, or Firm—Gerald G. Crutsinger; John F. Booth; Monty L. Ross

[57] **CLAIM**

The ornamental design for a portable desk, substantially as shown and described.

DESCRIPTION

FIG. **1** is a left front perspective view of a portable desk showing my new design;

FIG. **2** is a left rear perspective view thereof, the right side being substantially similar to the left side;

FIG. **3** is a bottom plan view thereof; and

FIG. **4** is a left front perspective view similar to FIG. **1** with the compartments in the open position.

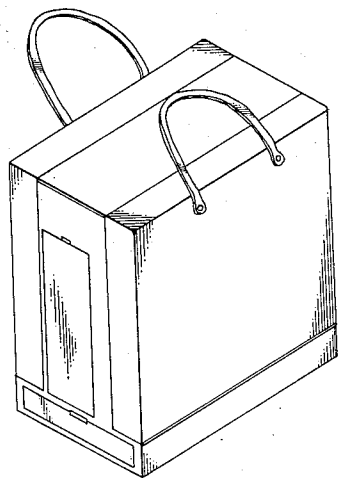

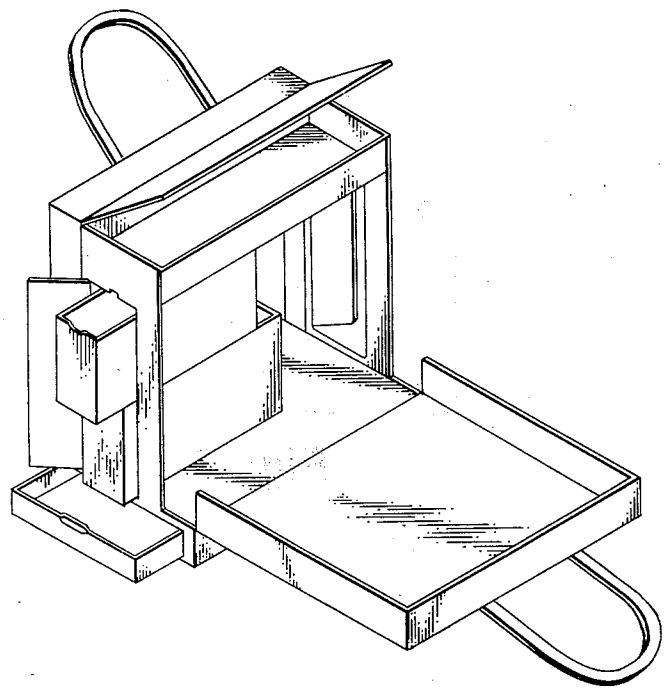

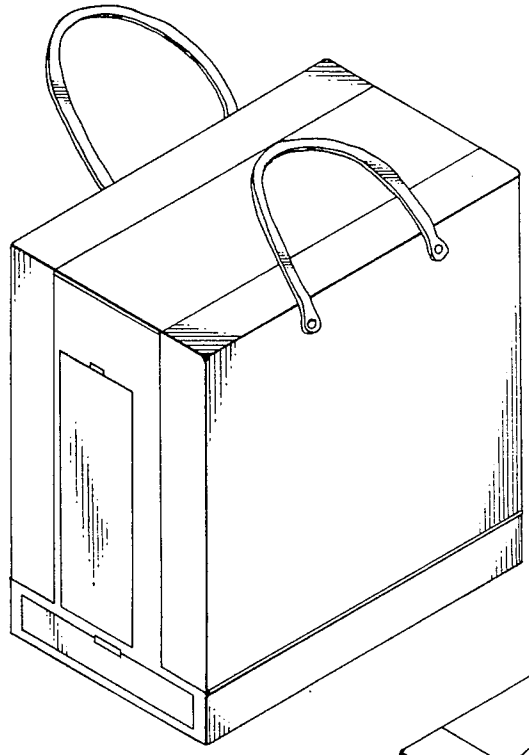

Fig. 1

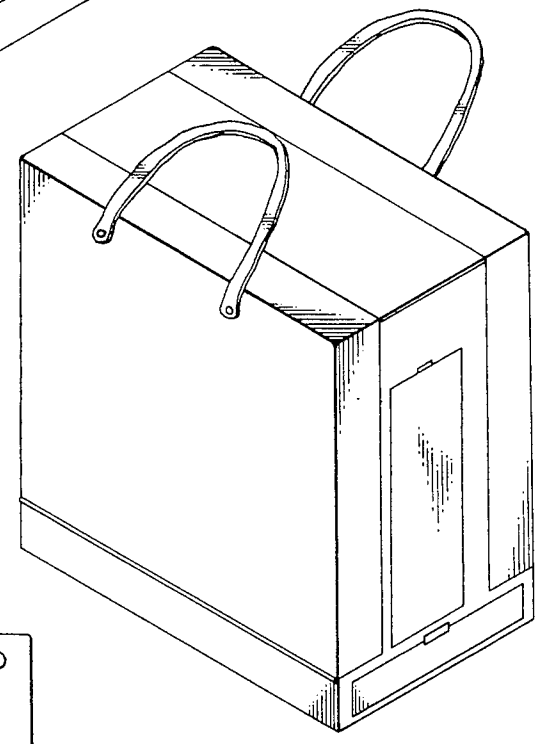

Fig. 2

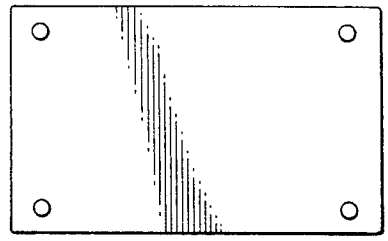

Fig. 3

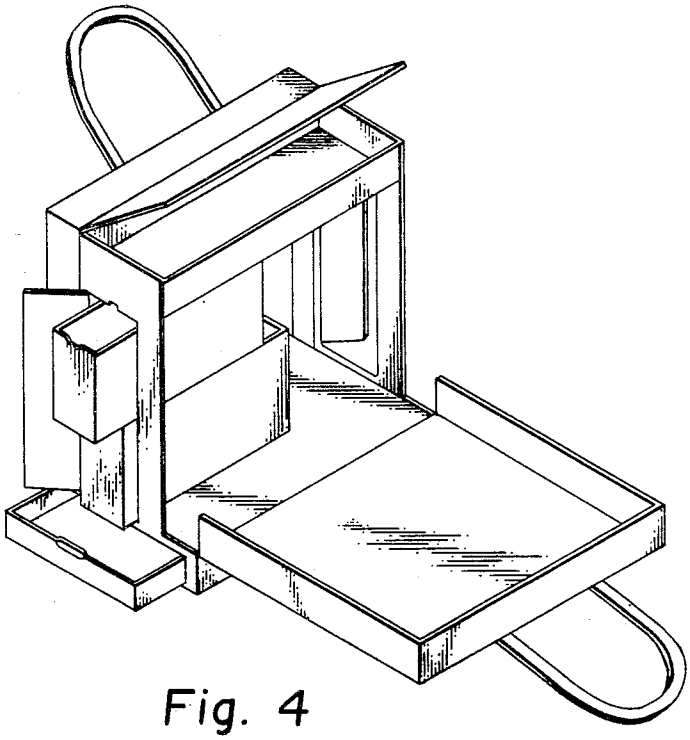

Fig. 4