Jan. 26, 1960 J. U. SMICK 2,922,163

STAPLER WITH SWINGABLE ARM

Filed Nov. 3, 1958 2 Sheets-Sheet 1

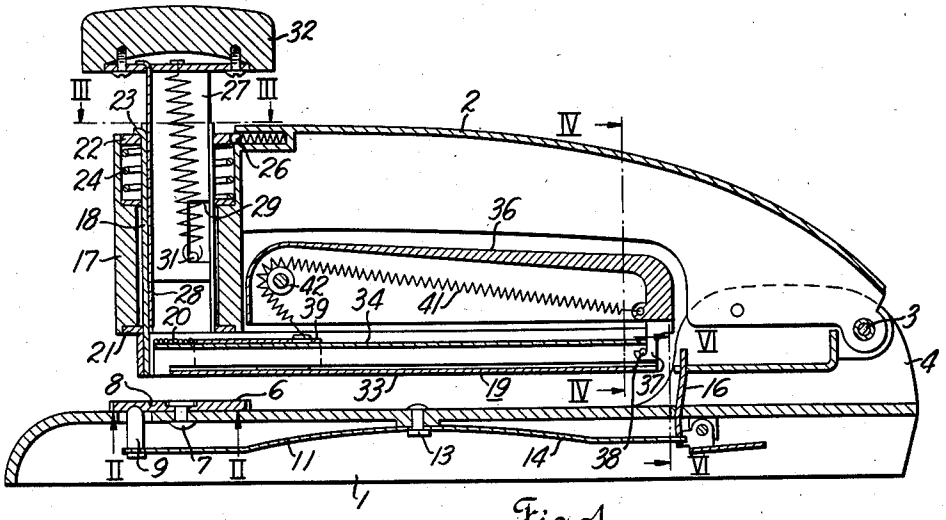

Fig. 1

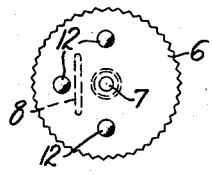

Fig. 2

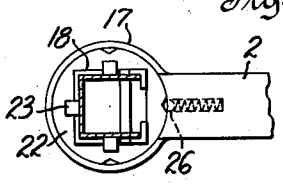

Fig. 3

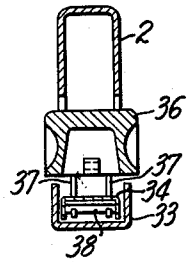

Fig. 4

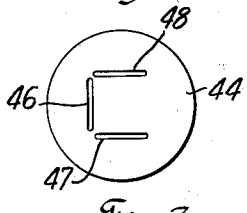

Fig. 7

Inventor
John U. Smick
by T. Lloyd LaFave
Attorney

Jan. 26, 1960 J. U. SMICK 2,922,163

STAPLER WITH SWINGABLE ARM

Filed Nov. 3, 1958 2 Sheets-Sheet 2

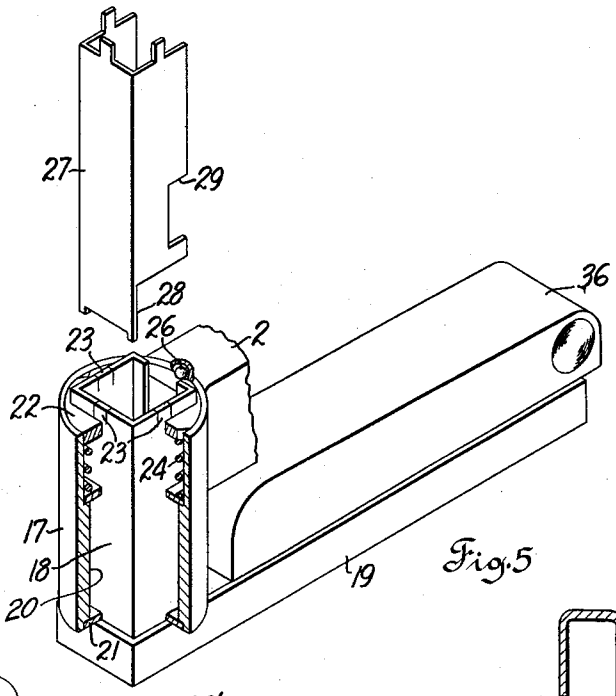

Fig.5

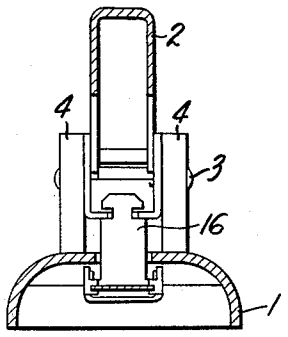

Fig.6

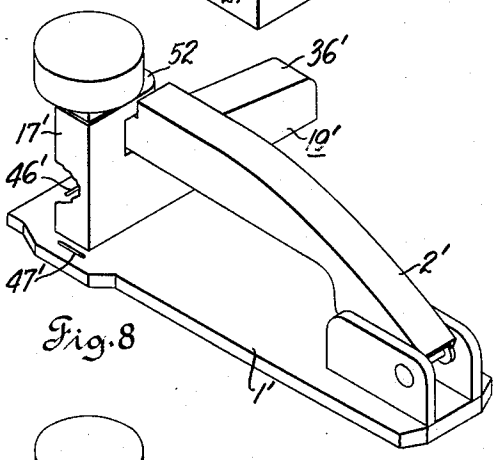

Fig.8

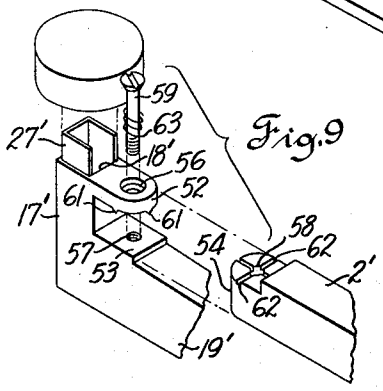

Fig.9

Inventor
John U. Smick
by T. Lloyd Le Fave
Attorney

United States Patent Office 2,922,163
Patented Jan. 26, 1960

2,922,163

STAPLER WITH SWINGABLE ARM

John U. Smick, Madison, Wis.

Application November 3, 1958, Serial No. 771,426

6 Claims. (Cl. 1—3)

This invention relates to a stapler or stapling device particularly of the hand operated portable type.

Staplers heretofore have been awkward and oversize devices when adapted to staple work pieces together at a point that is a relatively long distance from a given edge of the workpiece. The depth or reach of such machines has been entirely limited by the length of the stapling arm from its hinge connection on a base of the machine. Extra long stapling arms and T-shaped stapling arms have heretofore been provided to overcome some of these difficulties.

According to the present invention such difficulty is obviated by a construction and arrangement of parts that maintain the stapler advantages of compact desk type staplers and provide advantages of the larger saddle and T-shaped staplers.

It is therefore an object of the present invention to provide a stapling machine of the type having a stapling arm overlying a base in which the length of the arm does not limit the effective depth or reach of the stapler for securing, for example, several sheets of paper together along a line spaced from a parallel edge a distance greater than the length of the stapling arm.

Another object of the invention is to provide a stapler that may be used to staple sheets of material together at a point extending within the full length of the stapling arm from the edge thereof disposed within the throat of the stapler which permits the staple to be inserted either on a line parallel to the edge in the stapler or on a line perpendicular thereto.

Another object of the present invention is to provide a relatively small desk type stapler with a stapling mechanism that is laterally swingable about an axis at or adjacent to the point of application.

Another object of the invention is to provide a stapler with a stapling arm swingable to selected lateral positions and utilizing the same anvil plate in the base for different angular positions of the stapling mechanism.

Other objects and advantages will be apparent upon a reading of the following description together with the accompanying drawings, in which:

Fig. 1 is a sectional view in elevation of a stapling device embodying the present invention; Fig. 2 is a bottom view of the anvil plate of Fig. 1; Fig. 3 is a view taken along the line III—III of Fig. 1; Fig. 4 is a view taken along the line IV—IV of Fig. 1; Fig. 5 is an isometric view of a portion of the stapling mechanism of Fig. 1 with a portion broken away and with the plunge channel shown removed; Fig. 6 is a view taken along the line VI—VI of Fig. 5; Fig. 7 is a view of another anvil plate; Fig. 8 is a perspective view of another stapling device embodying the present invention; and Fig. 9 is a perspective view of portions of the stapling device of Fig. 8 showing the stapling head and the frame separated to be pivotally connected by a pivot pin.

Referring to the drawings the stapler illustrated in Fig. 1 comprises a longitudinally extending base 1 and

overlying frame or arm 2 pivotally connected about a transverse pin 3 extending through spaced ears 4 that are integral to an end of the base.

An anvil 6 is mounted on the forward end of the base by a rivet 7 that serves as a vertical pivot for the anvil. A staple bending recess or slot 8 is formed in the anvil. Under the base, a detent for locking the anvil in any rotated position, comprises a stud 9 secured to a leaf spring 11 and extends through an aperture in the base and in engagement with one of a plurality of circumferentially spaced holes 12 or recesses in the bottom face of the anvil. The leaf spring is secured by rivet 13 to the base 1.

The leaf spring may have a portion 14 that holds another detent mechanism under the base including a pivotal member 16 that detachably locks with the upper frame for securing it in operative position with the base in a known manner. Suitable spring means may be provided to bias the arm 2 to the raised work receiving position shown in Figure 1, such as by means of the leaf spring 14 and the latch 16 which detachably engages the frame of the arm 2. When arm 2 is depressed, as in a stapling operation, the latch 16 pushes down against leaf spring 14 further tensioning the spring which reacts to return the arm to its normal position limited by the latch 16.

A head 17 is secured to the free end of the arm 2 and supports a stapling mechanism as hereinafter described that selectively permits application of staples, transversely of the arm and base, to work pieces such as sheets of material disposed in the throat of the stapler, or the application of a staple in a line parallel with the length of the base.

A vertical plunger receiving channel 18 extends through a bore 20 in head 17 and is rigidly secured or integral with a horizontal swing arm 19 that normally underlies the frame arm 2. A washer 21 disposed about plunger channel 18 abuts the bottom of head 17 in a counterbore therein for radially aligning the channel 18 for rotation within head 17 about the axis of the bore therein. A washer 22 is disposed about the upper end of channel 18 in a counterbore in head 17 for radially guiding the upper portion in the head 17. Portions 23 of channel 18 are shown bent over washer 22 to axially secure channel 18 within head 17. A spring 24 is disposed in the counterbore under washer 22 to urge the washer and the channel 18 upward so that the swing arm abuts the washer at the bottom of head 17, thereby axially securing the plunger channel and permitting rotation thereof within head 17. Upper and lower washers 21 and 22 are rotatable in their counterbores in head 17 and being in non rotatable relation to plunger receiving channel 18, which extends through the bore 20 in head 17 and through the washers, the washers therefore provide means for rotating the channel 18 in bore 20. Thus, the L shaped structure provided by the plunger and staple receiving channels is swingable about the axis of the bore 20. With the upper washer rotatable with channel 18, a spring biased detent 26 engages one of a plurality of notches in the periphery of washer 22 to secure it against free rotation, but yields upon torque applied to channel 18 by hand swinging of arm 19.

A plunger 27 is disposed in plunger receiving channel 18 and has a portion 28 extending downward and serving as a ram or hammer for engaging an end staple fed into the plunger channel. Plunger 27 has an elongated slot 29. A pin 31 extends through plunger channel 18 and through slot 29 to limit axial movement of plunger 27. A compression spring disposed in plunger 27 between pin 31 and plunger cap 32 urges plunger 27 normally upward.

Swing arm 19 carries and feeds staples 20 to be engaged by the hammer of the plunger when it is forced downward in a stapling operation. Swing arm 19 comprises a U-shaped channel integrally secured to plunger channel 18. A smaller U-shaped channel 34, Fig. 4, is disposed and secured within and to the bottom of channel 33 to form in a known manner a guide rail over which staples are disposed.

A hood 36 is mounted in overlying relation to channel 19 under the arch of frame 2. When the swing arm 19 is pivoted out of the plane of the base and frame 2, then the hood may be removed from the swing arm or vertically pivoted upward about its free end for hood 36 has a hook 37 that engages a pin 38 mounted transversely in the end of channel 34. The other end of hood 36 may be conveniently secured in closed position as by making frictional engagement with the head 17.

For urging the staples 20 in swing arm 19 forward toward the head 17, a slide bar 39 slides on channel rail 34 and is correspondingly shaped with a flange portion underlying a leg of the rail so that the slide bar can only move longitudinally of the channel rail. A tension spring 41 has one end connected to the rear or pivot end of the hood 36. A roller 42 is mounted on a pin secured to opposite walls of the hood at its forward end, and spring 41 rides over this roller for applying spring bias urging slide bar 39 forward.

In the embodiment of the invention above described the anvil 6 is shown as rotatable to different positions for alignment of the staple receiving slot with the position of the hammer 28 when the swing arm has been rotated. Fig. 7 shows another anvil 44 that may be rigidly secured to base 1 and which is provided with a first staple receiving slot 46 aligned with hammer 28 when the swing arm is in the plane of the frame and base, and a second staple receiving slot 47, 48 at right angles to the first, for alignment with the hammer 28 when the swing arm is pivoted in one direction 90 degrees from its normal position.

Fig. 8 shows another stapling device embodying the present invention. Parts similar to those of the device of Figure 1 carry a corresponding prime reference number. In Fig. 8 the pivotal connection between the stapling mechanism and the frame arm 2 is shown outside of the plunger area. Arm 2' is mounted on a base 1', as in Fig. 1, and the stapling mechanism is mounted on the free end of arm 2' and includes a head 17' that has a plunger receiving channel 18' suitably formed therein, and a plunger 27' reciprocable in channel 18'. Channel 18' may be formed within head 17' or be an insert disposed and rigidly secured therein as non rotatable relation to head 17'.

Head 17' includes a pair of flanges 52, 53 on the upper and lower portions thereof which form a clevis receiving the free end 54 of frame arm 2'. A bore 56 in flange 52 is aligned with a threaded hole 57 in flange 53 and a bore 58 through end 54 aligns therewith with a pivot pin 59 extending through bores 56, 57 and secured in hole 58 to pivotally secure head 17' to arm 2'. Raised or ridge portions 61 on the underside of flange 52 are adapted to seat in corresponding V-shaped grooves 62 in the mating face of the end 54 to frictionally hold the members in position for stapling with the swing arm 19' in the plane of the frame arm 2' and the base 1 and also in a transverse position thereto. A spring 63 disposed about pin 59 between the flange 53 and end 54, urges the end 54 in abutment with the upper flange 52 to take up play between the end 54 and the clevis formed by the flanges 52, 53.

Base member 1' may have an anvil plate with staple bending slots formed therein for alignment with the stapling head in its normal and transverse positions. Base 1 is shown however as having stapling bending

slots 46', 47' formed in the face thereof, Fig. 8. These slots 46', 47' are circumferentially spaced about a center that aligns with the pivot axis of pin 59 when the head is forced downward in a stapling operation.

Head 17' and swing arm 19' are rigid with one another and swing together about the axis of pivot pin 59, which as shown is disposed outside of the plunger area of head 17' but as close thereto as is convenient so as to maintain a short radius for the application of staples.

While but few embodiments of the present invention have been shown and described, other embodiments and modifications may be made that are within the spirit of the present invention and scope of my claims.

I claim:

1. A stapling device such as a desk type stapler having a longitudinally extending base with a staple bending anvil mounted on a free end of said base, a frame normally overlying said base and hingedly secured to an end of said base remote from said anvil, a head at a free end of said frame secured in a generally upright relation thereto, a plunger containing channel, a plunger reciprocable therein, said plunger containing channel extending through said head and supported therein for rotation about the axis of said plunger containing channel, a staple storing and feeding channel secured to the bottom of said plunger containing channel and extending normally in underlying relation to said frame between said frame and said base, said plunger channel and staple channel being swingable about said axis to and away from the plane including said frame and said base, a first staple bending slot in said anvil at a right angle to said base and a second staple bending slot in said anvil in the line of said base with said first slot positioned to receive the ends of a staple when said swingable staple channel is in the plane of said frame and base and with said second slot positioned to receive the ends of a staple when said swingable staple channel is normal to said plane.

2. A stapler for applying a staple to a workpiece, said stapler comprising a rigid longitudinally extending base, a frame overlying said base in spaced relation thereto and pivotally secured at a rearward end to said base, the free end of said frame defining a head having a bore normal to said base, channel means for storing staples and having a staple passing slot in the bottom of said channel at the forward end thereof, an upright member normal to said channel and secured to the free end thereof, a plunger reciprocable in said upright member and having an upper end extending above said head for receiving a staple transmitting thrust, spring means urging said plunger upward to a normal position such that a lower end of said plunger is disposed above and in alignment with an end staple overlying said staple passing slot, means rotatably supporting said upright member in said bore in said head so that said upright member and said channel are swingable about the axis of said bore, and stop means secured to said head for preventing axial movement of said upright member in said bore.

3. In a stapling device having a rigid longitudinally extending base and a frame hingedly connected at one end to said base, a staple transmitting mechanism including a staple channel normally disposed in underlying relation to said frame and adapted to guide a supply of staples therein and a plunger guide rigidly secured to said staple channel and extending upright therefrom to form an L-shaped structure, pivot means axially securing and supporting said L-shaped structure on the free end of said frame, said pivot means having a generally vertical axis for swinging said staple transmitting mechanism so that said staple channel which may normally underlie said frame is swingable laterally therefrom, a plunger disposed in said plunger guide overlying the position of an end staple in said staple guide, and an anvil for bending the ends of a staple that are

forced through a workpiece, said anvil mounted on said base in underlying relation to said plunger, and detent means formed radially adjacent said pivot means in cooperating faces of said frame and said L shaped structure for securing said L-shaped structure in selected swingable positions.

4. A stapler comprising a longitudinally extending base, an arm pivotally secured to said base, a head mounted on the free end of said arm, an L-shaped structure formed by the combination of a generally horizontal channel for normally containing a supply of staples and an upright member containing a plunger fitted for reciprocable movement therein, said horizontal channel having a staple passing slot at its forward end and means urging said staples toward said slot, said plunger having a bottom end aligned with said slot and shaped for pushing a staple through said slot, spring means urging said plunger upward away from said slot, and means rotatably disposed in top and bottom ends of said head and secured against axial movement therein, said upright member extending through said rotatable means and then secured axially and rotatably therewith, whereby said L-shaped structure including said plunger receiving channel and said staple receiving channel are

swingable to and from the plane of said arm and said base about the axis of said rotatable means in said head.

5. A stapler as defined in claim 4 including detent means mounted in said frame for securing said upright member against rotation in said head.

6. A stapler as defined in claim 4 including an anvil plate positioned on the forward end of said base in axial alignment with the bore in said head, said anvil plate having a pair of staple bending slots disposed therein at right angles to one another and spaced from the axis of said bore a distance slightly greater than one half the length of the staple bending slot so that said staple bending slots do not overlap.

References Cited in the file of this patent

UNITED STATES PATENTS

1,222,149	Shafer	Apr. 10, 1917
1,586,583	Skrebba	June 1, 1926
2,358,463	Masters	Sept. 19, 1944

FOREIGN PATENTS

675,007	Germany	Apr. 27, 1939
928,437	France	Nov. 27, 1947