Feb. 20, 1940. J. S. HARDY 2,190,783

ELEVATOR

Filed Jan. 25, 1938

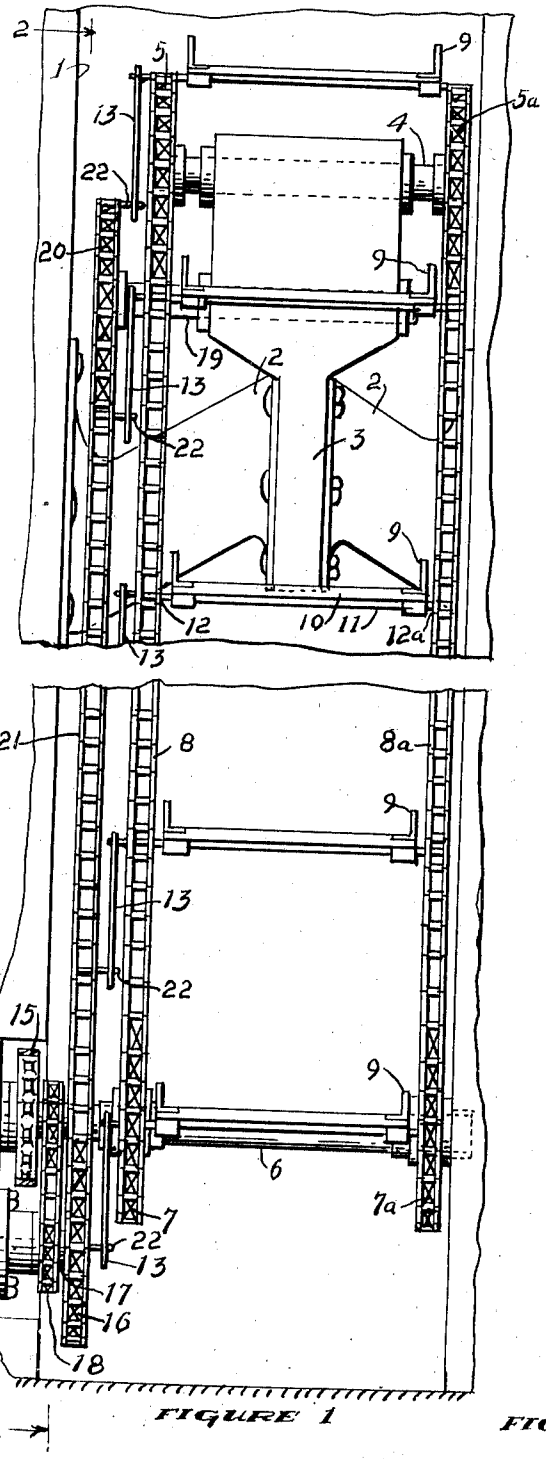

FIGURE 1

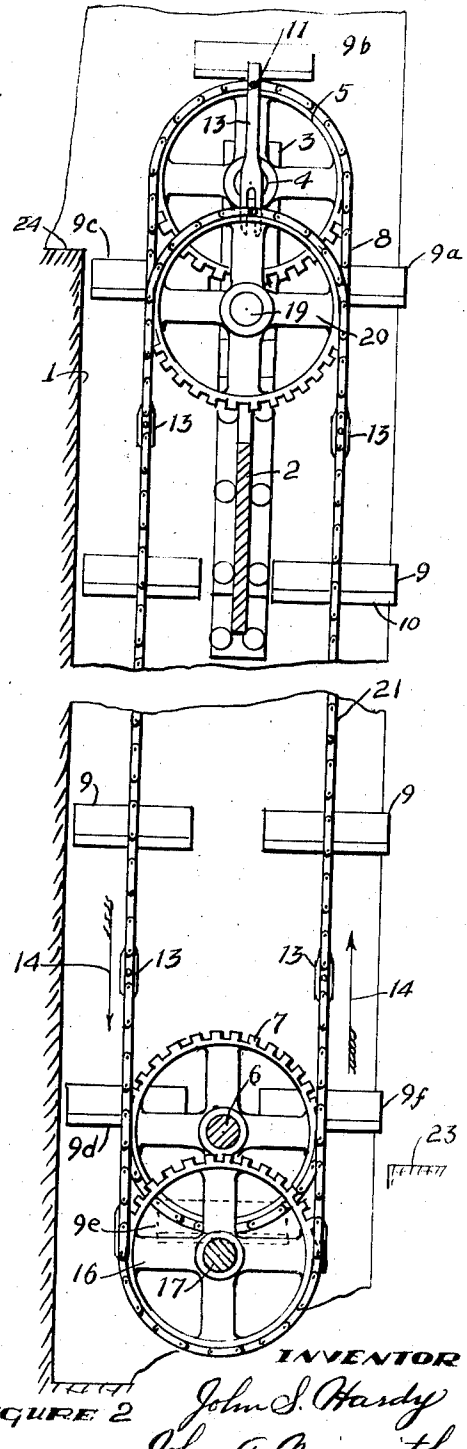

FIGURE 2

INVENTOR
John S. Hardy
John A. Naismith
ATTORNEY

Patented Feb. 20, 1940 2,190,783

UNITED STATES PATENT OFFICE

2,190,783

ELEVATOR

John S. Hardy, San Jose, Calif.

Application January 25, 1938, Serial No. 186,836

1 Claim. (Cl. 198—154)

It is one object of the invention to provide an elevator whereby items may be transported from a given level to a higher or lower level through the medium of an endless chain or belt, and presented for removal on either side of the belt without changing their positions relative to a horizontal plane during the period of transportation.

It is also an object of the invention to provide an elevator of the character indicated wherein the item supporting devices are positively and accurately controlled to travel the entire circuit smoothly and without jar.

Finally, it is an object of the invention to provide an elevator of the character indicated that will be economical to manufacture, simple in form and construction, positive in operation, strong, durable, and highly efficient in its practical application.

In the drawing:

Figure 1 is a front elevation of an elevator embodying my invention, partly broken away.

Figure 2 is a sectional view on line 2—2 of Figure 1.

In the particular embodiment of the invention as herein disclosed, I show at 1 a recess in a wall upon the sides of which are mounted brackets 2 supporting a central bearing member 3.

In the top portion of member 3 is journaled a shaft 4 having sprockets 5—5a mounted on its opposite ends to rotate therewith.

Directly below shaft 4 and journaled in the side walls of the recess in parallel relation to said shaft, is another shaft 6 having sprockets 7—7a mounted on its opposite ends to rotate therewith.

Mounted upon the sprockets 5—7 and 5a—7a are belt chains 8—8a, and upon these chains are mounted the several item carrying devices indicated generally at 9.

Each device 9 comprises a platform 10 rigidly mounted upon a centrally disposed bar 11, the said bar 11 being journaled in the two chains as at 12—12a and one end of the bar being fitted with a forked arm 13 which is rigidly attached thereto.

The chain belts 8—8a and parts mounted thereon are driven in the direction indicated by arrows 14 by means of a chain and sprocket drive to shaft 6, indicated generally at 15.

At 16 is shown a sprocket fixedly mounted on a stub shaft 17 which is in turn rotatably mounted in the side wall of recess 1 directly below shaft 6 and in parallel relation thereto.

The shaft 17 is rotated simultaneously with shaft 6, and driven at the same speed and in the same direction, by means of a chain and sprocket drive indicated generally at 18.

Mounted in the bearing member 3 immediately below shaft 4 is a shaft 19 having a sprocket 20 rotatably mounted thereon in the plane of sprocket 16, and on the two sprockets 16 and 20 is mounted a chain belt 21.

In effecting the assembly above described the chain drive 16, 20, 21 is a duplicate of the chain drive 5, 7, 8, and is disposed to operate in a plane parallel therewith, with the axes of rotation of the several shafts also lying in the same plane. The shafts 17 and 19, however, are offset vertically with relation to shafts 4 and 6.

Mounted on chain 21 and directed inwardly toward the chain 8, are spaced pins 22, the spacing of these pins being the same as the spacing of the bars 11 carrying platforms 10. When completely assembled each forked arm or lever 13 engages one of the pins 22, and the spacing between the axes of the bar 11 and pin 22 is equal to the spacing of the axes of the shafts 4 and 19, and shafts 6 and 17.

The result of the construction described is that the position of the item carrying device remains unchanged throughout its complete path of travel. For instance, in the structure disclosed the carrier 9 has a horizontal floor surface as it travels upwardly on the vertical portion of the chain, and it is held in that position through the engagement of the lever 13 with a pin 22. Since the movement of pin 22 corresponds exactly with that of the bar 11 as they travel over their respective sprockets it follows that the horizontal position remains unchanged as the carrier travels from one side of the elevator to the other as through the positions 9a, 9b, 9c, and of course, through positions 9d, 9e, 9f. The forked engagement of the lever with the pin 22 allows for any slight variations in the two chain structures without interfering with their accurate cooperation as described.

In this embodiment of the invention the carrier elements are travelling in the direction indicated by the arrows 14 with loading and unloading platforms at 23 and 24 respectively, but it is obvious that these carriers may be operated in either direction, with the platforms disposed at any height and on either side of the structure, also that items may be placed upon the carriers 9 and removed therefrom, either manually or by automatically operated item handling devices.

It is to be understood, of course, that while I have herein shown and described but one specific example of the invention, changes in form construction, and method of assembly and operation may be made within the scope of the appended claim.

I claim:

The combination with an endless chain elevator having item carrying devices pivotally mounted thereon, of means for maintaining each device in predetermined relationship with the horizontal, said means comprising, an endless control chain structure substantially duplicating the elevator chain structure and operable in a plane paralleling the plane of rotation of the elevator chain structure, with its axis of rotation lying in the plane of the axis of rotation of the elevator chain structure but offset relative thereto, a pin mounted on the control chain, and a forked arm fixedly mounted on the item carrier with its forked end engaging said pin, the spacing of the pivotal mounting of the carrier and the pin on the control chain being equal to the offset between the axes of rotation of the control and elevator chains, and means for driving the two chain structures at a uniform rate of speed in the same direction comprising, a drive shaft operatively associated with the elevator chain structure and driving means connected thereto, a drive shaft operatively associated with the control chain structure and disposed to parallel the last mentioned shaft, and cooperating drive means connecting the last two mentioned shafts adapted to drive the second shaft at the same speed and in the same direction as the first shaft.

JOHN S. HARDY.