Nov. 11, 1941. C. G. FLYGARE ET AL 2,262,721

GRINDING MACHINE

Filed Dec. 17, 1940 4 Sheets-Sheet 1

Fig.1

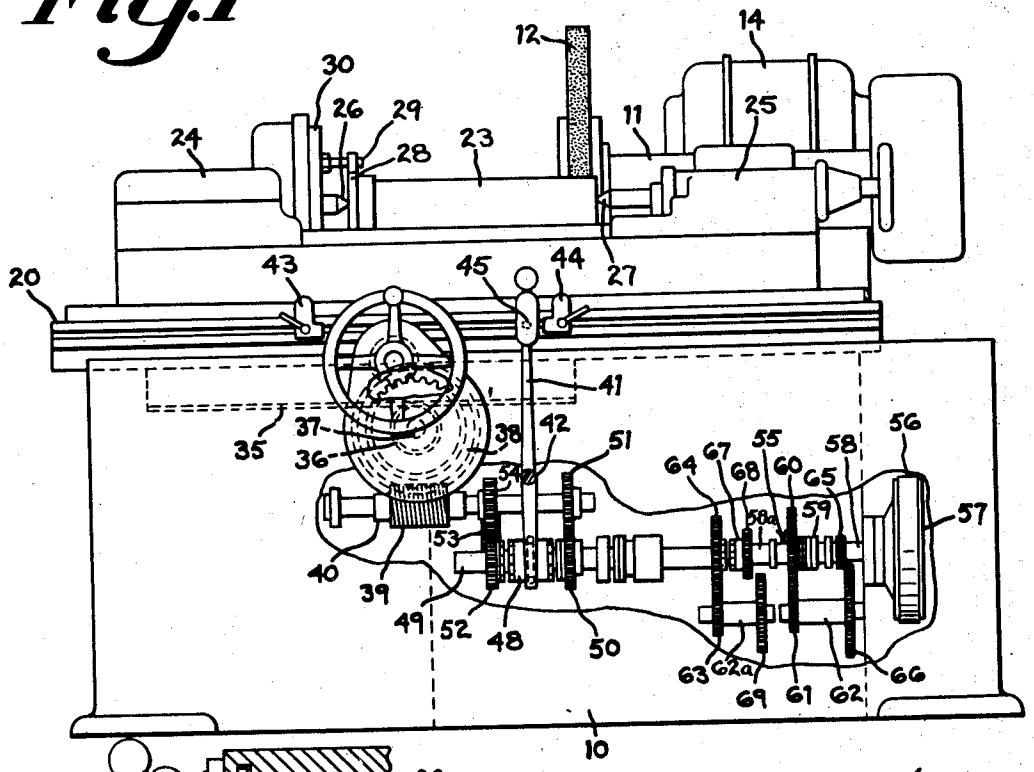

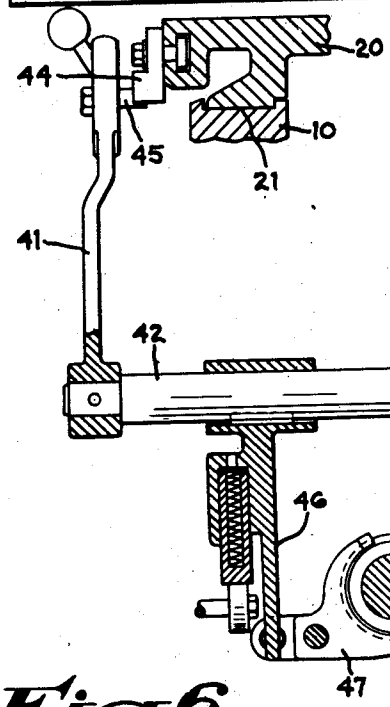

Fig.6

Fig.7

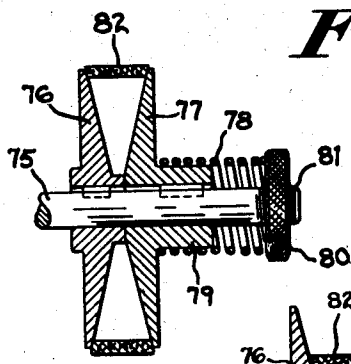

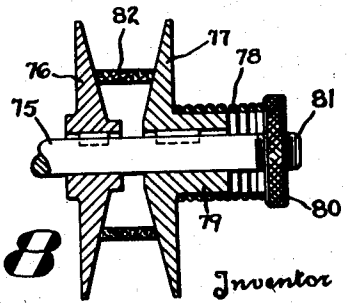

Fig.8

Inventor

CARL G. FLYGARE

STEWART S. MADER

By Harold W. Eaton

Attorney

Nov. 11, 1941. C. G. FLYGARE ET AL 2,262,721

GRINDING MACHINE

Filed Dec. 17, 1940 4 Sheets-Sheet 2

Fig. 2

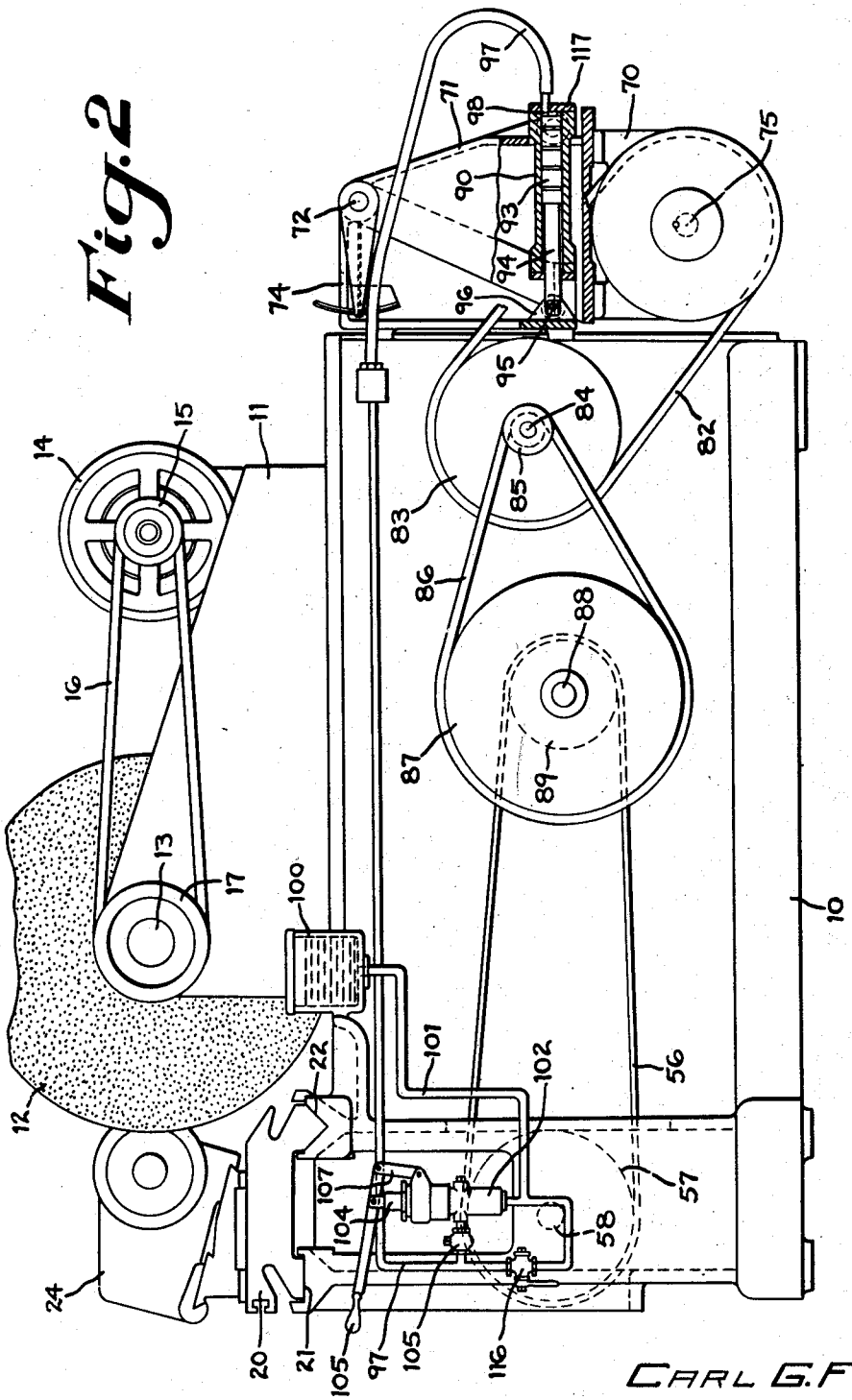

Inventor

CARL G. FLYGARE

STEWART S. MADER

By Harold W. Eaton

Attorney

Nov. 11, 1941. C. G. FLYGARE ET AL 2,262,721

GRINDING MACHINE

Filed Dec. 17, 1940 4 Sheets-Sheet 3

Fig. 4

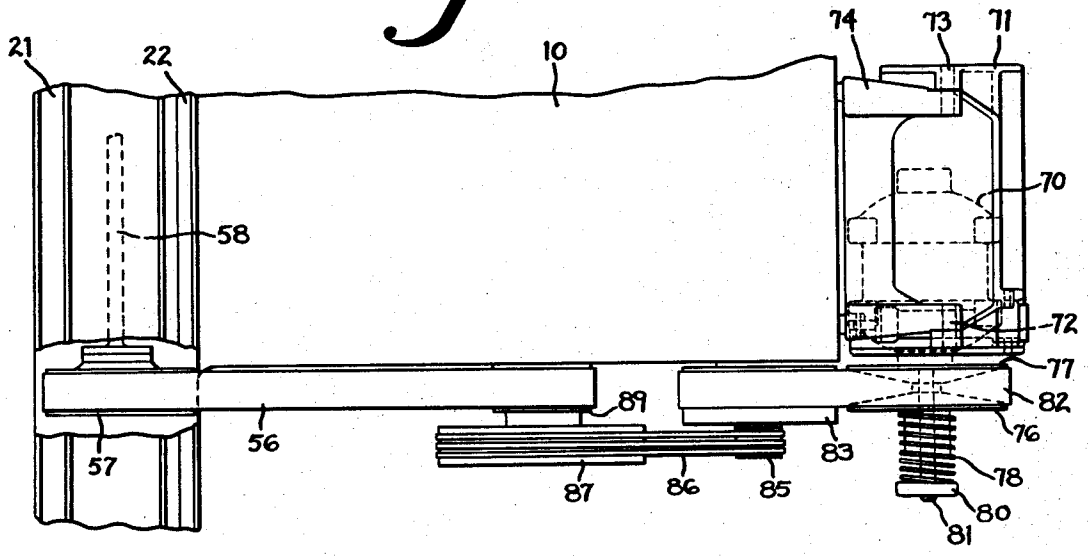

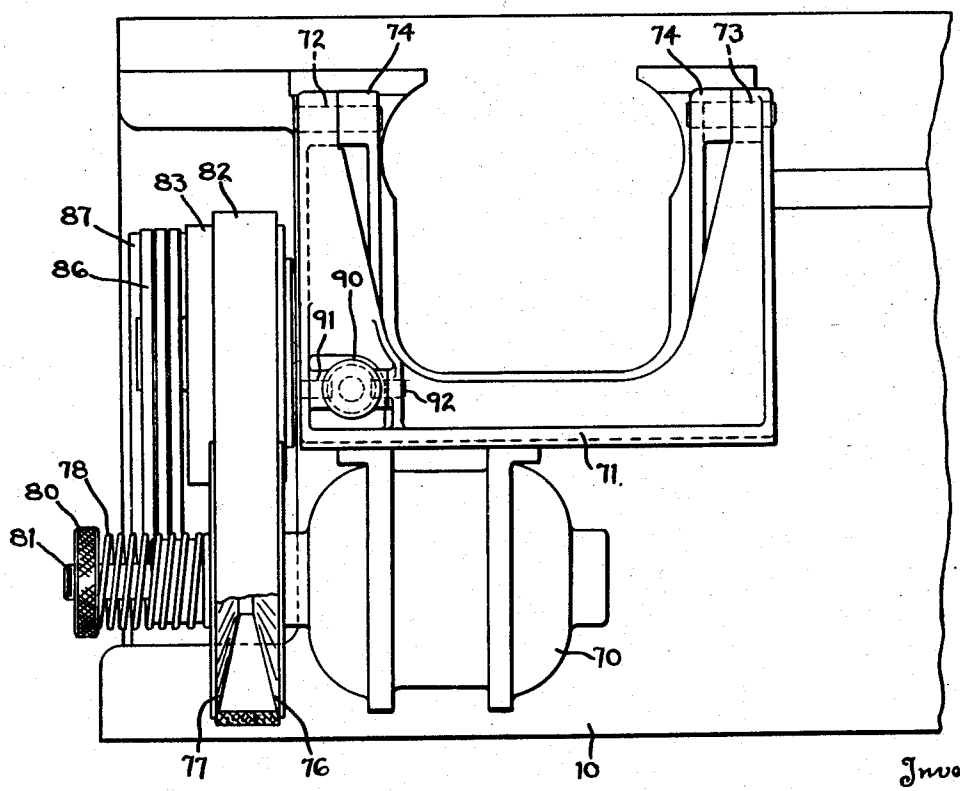

Fig. 3

Inventor

CARL G. FLYGARE

STEWART S. MADER

By Harold W. Eaton

Attorney

Nov. 11, 1941. C. G. FLYGARE ET AL 2,262,721

GRINDING MACHINE

Filed Dec. 17, 1940 4 Sheets-Sheet 4

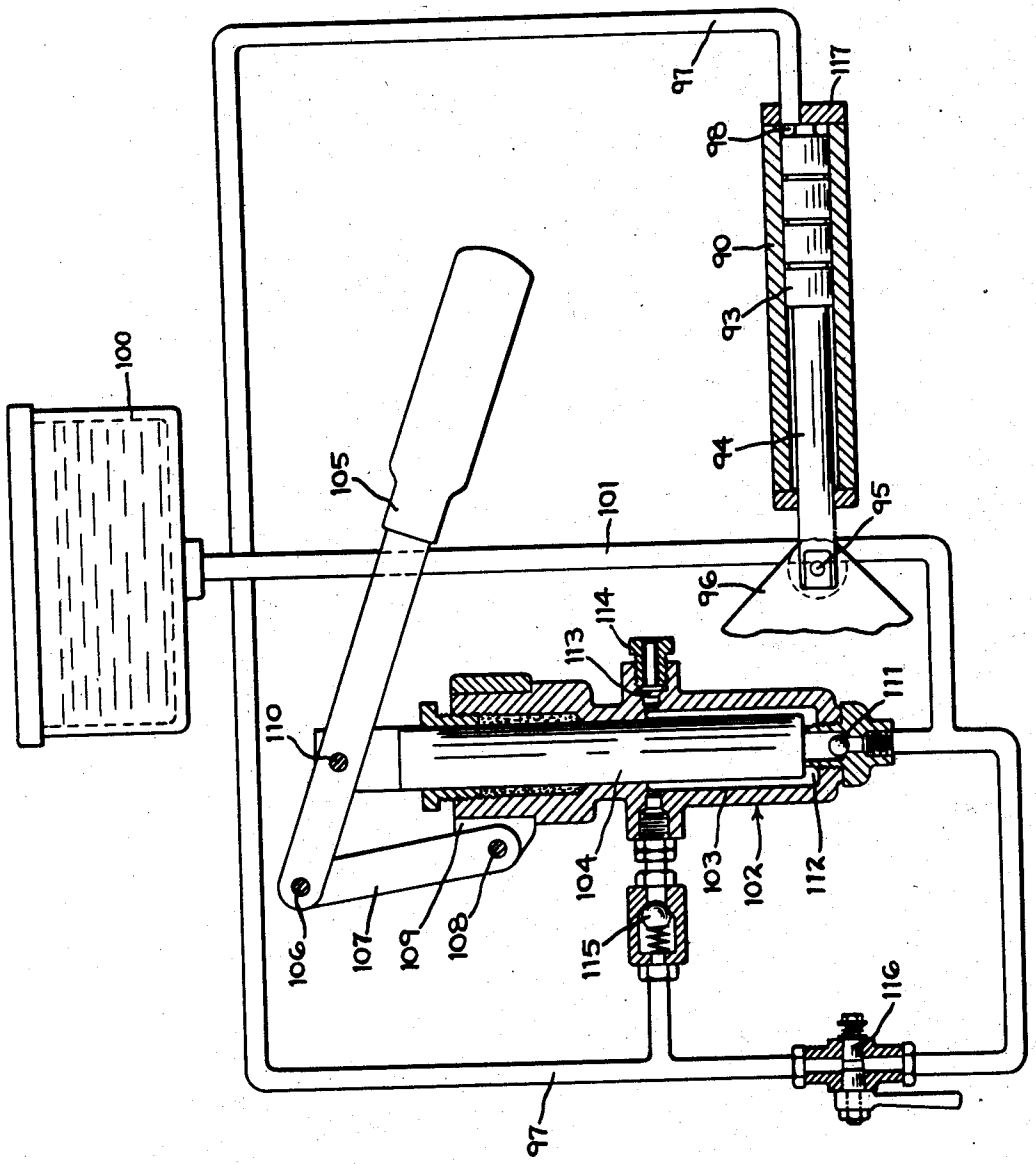

Fig. 5

Inventor

CARL G. FLYGARE

STEWART S. MADER

By Harold W. Eaton Attorney

Patented Nov. 11, 1941 2,262,721

UNITED STATES PATENT OFFICE

2,262,721

GRINDING MACHINE

Carl G. Flygare and Stewart S. Mader, Worcester, Mass., assignors to Norton Company, Worcester, Mass., a corporation of Massachusetts

Application December 17, 1940, Serial No. 370,514

2 Claims. (Cl. 51—231)

The invention relates to grinding machines, and more particularly to a variable speed table driving mechanism for a cylindrical type grinding machine.

One object of the invention is to provide a simple and thoroughly practical cylindrical type grinding machine having a readily controllable variable speed table driving mechanism. Another object of the invention is to provide a variable-speed motor-driven table driving or reciprocating mechanism. Another object of the invention is to provide a motor driven variable speed cone driving mechanism for a grinding machine table.

Another object of the invention is to provide a variable-speed opposed-cone motor driven driving mechanism for a grinding machine table, in which the motor-driven cone-drive is pivotally mounted so that the center distance between the motor shaft and the drive shaft may be varied to vary the speed of the table. It is a further object of the invention to provide a motor driven opposed cone variable speed driving mechanism, in which a manually operable, hydraulically actuated control mechanism is provided for controlling the position of the motor so as to vary the speed of the table movement.

A further object of the invention is to provide a motor driven variable speed table driving mechanism, in which a fluid pump is utilized to control the position of the driving motor so as to vary the work table speed. Other objects will be in part obvious or in part pointed out hereinafter.

The invention accordingly consists in the features of construction, combinations of elements, and arrangements of parts, as will be exemplified in the structure to be hereinafter described, and the scope of the application of which will be indicated in the following claims.

In the accompanying drawings, in which is shown one of various posible embodiments of the mechanical features of this invention,

Fig. 1 is a front elevation of the improved cylindrical grinding machine, having parts broken away to show a portion of the interior mechanism;

Fig. 2 is a right-hand end elevation, on an enlarged scale, having parts broken away and shown in section;

Fig. 3 is a fragmentary rear elevation, on an enlarged scale, showing the motor drive for the table;

Fig. 4 is a fragmentary plan view, on an enlarged scale, showing a portion of the table driving mechanism;

Fig. 5 is a piping diagram of the hydraulically operated table speed control mechanism;

Fig. 6 is a fragmentary cross-sectional view, on an enlarged scale, through the table reversing lever;

Fig. 7 is a fragmentary cross-sectional view of the opposed driving cones positioned for maximum speed; and

Fig. 8 is a similar fragmentary cross-sectional view showing the opposed driving cones positioned for a reduced table speed.

A grinding machine has been illustrated in the drawings, comprising a base 10 which supports a transversely movable grinding wheel slide 11. The wheel slide 11 is arranged to slide transversely on the base 10 on the usual old and well known V and flat ways (not shown). A grinding wheel 12 is supported on one end of a wheel spindle 13 which is journalled in suitable bearings (not shown) in the wheel slide 11. The grinding wheel 12 and its supporting spindle 13 are rotated by means of an electric motor 14 which is mounted on the upper surface of the wheel slide 11. The motor 14 is provided with a driven multi-V-grooved pulley 15 which is connected by a multiple V-belt 16 with a multi-V-grooved pulley 17 which is mounted on the end of the wheel spindle 13.

The base 10 also serves as a support for a longitudinally reciprocable work supporting table 20. The table 20 is arranged to slide longitudinally on a flat way 21 and a V-way 22 formed on the upper surface of the base 10. The table 20 is provided with a rotatable work support for rotatably supporting a cylindrical work piece 23 for a grinding operation. The rotatable work suport may comprise a headstock 24 and a footstock 25 which are adjustably supported on the upper surface of the table 20. A headstock center 26 and a footstock center 27 serve rotatably to support the opposite ends of the work piece 23 for a grinding operation. A driving dog 28 is mounted on the left-hand end of the work piece 23 and is provided with an upwardly extending portion which is arranged to be engaged by a driving pin 29 carried by a rotatable face plate 30 on the headstock 24. When the headstock face plate 30 is rotated by any of the old and well known mechanisms, the pin 29 engaging the dog 28 wil produce a rotary motion of the work piece 23.

The table 20 may be reciprocated longitudinally by means of a rack and gear mechanism comprising a rack bar 35 depending from the under side of the table 20. A gear 36 which

is supported on a rotatable shaft 37 meshes with the rack bar 35. The shaft 37 is journaled in suitable bearings (not shown) in the base 10 of the machine. The shaft 37 also carries a worm gear 38 which meshes with a worm 39. The worm 39 is mounted on a shaft 40 which is rotatably journalled in suitable bearings (not shown) in the base 10.

A reversing mechanism is provided comprising a pivotally mounted reversing lever 41 which is fixedly supported on the outer end of a shaft 42 (Figs. 1 and 6). The reversing lever 41 is arranged to be shifted in a clockwise or counterclockwise direction by a pair of adjustable table dogs 43 or 44 which are arranged in the path of a stud 45 which is fixedly carried by the reversing lever 41. The rock shaft 42 supports a downwardly extending arm 46 (Fig. 6) which is arranged to shift a yoked member 47 longitudinally when the reversing lever 41 is actuated by the table dogs 43 or 44. The yoked member 47 is arranged to straddle and engage a groove formed in the periphery of a slidably mounted clutch member 48. The clutch member 48 is slidably keyed to a rotatable drive shaft 49 which is in turn journalled in suitable bearings in the base 10 of the machine. When the clutch member 48 is shifted toward the right (Fig. 1), it engages or mates with clutch teeth carried by a gear 50 which is in turn rotatably supported on the shaft 49. The gear 50 meshes with a gear 51 fixedly supported on the shaft 40. It will be readily apparent from the foregoing disclosure that when the clutch member 48 is in a right-hand end position (Fig. 1), rotary motion of the shaft 49 will be transmitted through the gear 50 and the gear 51 to rotate the shaft 40 in one direction.

Similarly, if the clutch member 48 is shifted toward the left (Fig. 1), it meshes with clutch teeth carried by a gear 52 which is in turn rotatably supported on the shaft 49. In order to transmit a reverse motion to the shaft 40, the gear 52 meshes with a rotatable idler gear 53. The idler gear 53 in turn meshes with a gear 54 which is fixedly mounted on the shaft 40. It will be readily apparent from the foregoing disclosure that when the clutch 48 is in a left-hand end position (Fig. 1), rotary motion of the shaft 49 will be transmitted through the gear 52, the idler gear 53, to rotate the gear 54 and the shaft 40 in the reverse direction, thus transmitting its motion through the worm 39, the worm gear 38, the shaft 37, the gear 36, to move the rack bar 35 in the opposite direction. When the clutch is shifted either toward the right or toward the left, the table 20 is caused to traverse in a direction either toward the right or toward the left and is automatically reversed in its direction of travel after a predetermined reciprocatory stroke by means of the table dogs 43 and 44 which are adjustably supported on the front edge of the table 20.

A driving mechanism is provided for rotating the shaft 49 and preferably includes a speed reduction gear unit 55 within the base of the machine. Power is supplied to the gear reduction unit 55 by means of a driving belt 56 from a source to be hereinafter described. The driving belt 56 drives a pulley 57 which is supported on the right-hand end of a shaft 58 (Fig. 1). A clutch member 59 is slidably keyed to the shaft 58 and, as shown in Fig. 1, is in engagement with clutch teeth fixed relative to a gear 60. The gear 60 is keyed to a rotatable shaft 58a. A slidably mounted clutch member 68 is slidably keyed to the shaft 58a. When the clutch member 68 is moved toward the left (Fig. 1), it engages clutch teeth which are formed on the end of or fixedly mounted on the end of the shaft 49 to provide a direct driving connection between the pulley 57 and the shaft 49 to impart a fast reciprocatory movement to the table 20.

A gear 65 is fixedly mounted relative to the clutch member 59 and is arranged to slide longitudinally therewith. If a slow reciprocatory movement of the table 20 is desired, the clutch member 59 is shifted toward the right (Fig. 1) to mesh the gear 65 with a gear 66 which is fixedly mounted on a rotatable shaft 62. The shaft 62 supports a gear 61 which meshes with the gear 60. The gear 60 is fixed on the shaft 58a. In this position of the clutch 59, a slow rotary motion is imparted to the clutch 67 and through the shaft 49 and the parts previously described to impart a slow reciprocatory motion to the table 20.

A gear 68 is fixedly mounted relative to the clutch 67. If an intermediate speed of the table 20 is desired, the clutch member 67 is shifted toward the right (Fig. 1) to mesh the gear 68 with a gear 69 which is fixedly mounted on a rotatable shaft 62a. A gear 63 is also fixedly mounted on the shaft 62a and meshes with a gear 64 which is fixedly mounted adjacent to the end of the shaft 49. It will be readily apparent from the foregoing disclosure that by manipulation of the clutches 59 and 67, a plurality of different speed combinations may be obtained to vary the reciprocatory speed of the table 20. The clutch members 59 and 67 are preferably operatively connected to be actuated by levers (not shown) mounted on the front of the machine base.

A variable speed motor driven mechanism is provided for driving the table reciprocating mechanism, comprising an electric motor 70 which is fixedly supported on the under side of a bracket 71 (Figs. 2, 3 and 4). The bracket 71 is pivotally supported on trunnion studs 72 and 73 (Figs. 2 and 3) which are in turn fixedly supported on a bracket 74 which is fixedly mounted on the rear of the machine base 10.

The electric motor 70 is provided with a rotor shaft 75 which supports a variable speed driving pulley. The driving pulley preferably comprises a pair of spaced frusto-conically shaped disks 76 and 77, both of which are keyed to the shaft 75. The driving cone disk 76 may be fixedly keyed to the shaft 75 and the driving cone disk 77 is slidably keyed thereto. A compression spring 78 surrounds a hub 79 formed integral with the cone-shaped driving disk 77 and is interposed between the cone-shaped disk 77 and an adjustable knurled nut 80 which is screw-threaded onto a threaded portion 81 of the motor shaft 75. The compression of the spring 78 serves normally to exert a pressure tending to maintain the driving cones 76 and 77 in the relative position shown in Figs. 3 and 7.

A driving belt 82 is provided having its side faces bevelled to mate with the conical surfaces of the cone shaped driving disks 76 and 77. The inner surface of the driving belt 82 wraps around the outer periphery of a pulley 83 which is mounted on a rotatable jack shaft 84. The shaft 84 is journalled in suitable bearings (not shown) formed in the base 10 of the machine. A multiple V-groove pulley 85 is supported on the shaft 84 and is connected to rotate with the pulley 83. Multiple V-belts 86 connect the pulley 85 with a pulley 87 which is fixedly supported on a rotatable shaft 88. The shaft 88 also supports a

pulley 89 which is connected by means of the driving belt 56 with the pulley 57 to transmit a rotary motion to reciprocate the table 20 as desired.

As shown in Figs. 2, 3 and 7, the driving belt 82 is positioned to transmit the maximum speed of the motor 70 to drive the table reciprocating mechanism. In order to vary the effective driving speed of the motor 70, the pivotally mounted bracket 71 may be swung in a counter-clockwise direction so as to increase the center distance between the motor shaft 75 and the jack shaft 84. The compression of the spring 78 is adjusted so as to maintain the driving cones 77 in the desired relationship with the fixed cone 76 to impart the desired power through the belt 82 in any position of the motor 70. When the bracket 71 is moved in a counterclockwise direction to increase the center distances between the motor shaft 75 and the jack shaft 84, the pull on the driving belt 82 will move the slidably keyed driving cone 77 toward the left (Fig. 3), thus compressing the spring 78 so that the driving belt engages the cones 76 and 77, respectively, at a point nearer the axis of the motor shaft 75 (Fig. 8), thus decreasing the effective driving speed transmitted by the cones 76 and 77 so as to reduce the effective driving speed of the motor 70 and thus produce a slower reciprocatory movement of the work table 20.

It is desirable to provide a mechanism for regulating the position of the driving motor 70 so that the effective driving speed thereof may be readily controlled from the operator's control station in front of the machine. In the preferred form a hydraulically operated mechanism is provided comprising a cylinder 90 which is readily supported on trunnion studs 91 and 92 (Fig. 3) on the pivotally mounted frame 71. A slidably mounted piston 93 is contained within the cylinder 90. The piston 93 is connected to one end of a piston rod 94. The other end of the piston rod 94 is pivotally connected by means of a stud 95 to a projecting lug 96 which is formed integral with the bracket 74. It will be readily apparent from the foregoing disclosure that when fluid is passed through a pipe 97 into a cylinder chamber 98, the piston 93 being relatively fixed, the cylinder 90 will move in a direction toward the right (Figs. 2 and 5) to swing the bracket 71 together with the driving motor 70 in a counterclockwise direction, thus lengthening the center distance between the motor shaft 75 and the jack shaft 84 so that the effective driving speed of the motor and the opposed cone driving member disks 76 and 77 will be reduced to transmit a reduced reciprocatory speed to the work supporting table 20.

It is desirable to provide a manually operable control mechanism for controlling and regulating the admission of fluid under pressure through the pipe 97 into the cylinder chamber 98 and also to control the exhaust of fluid therefrom. In the preferred construction a hydraulically operated control system is provided comprising a fluid reservoir 100 which is fixedly supported on the machine base 10. The reservoir 100 is connected by means of a pipe 101 with a manually operable fluid pump 102. The fluid pump 102 comprises a fluid cylinder 103 having a reciprocable piston 104 slidably mounted therein. The fluid pump 102 is arranged to be actuated by a manually operable lever 105 which is pivotally connected by a stud 106 to the upper end of a link 107. The lower end of the link 107 is pivotally connected by means of a stud 108 which is carried by a bracket 109 which in turn is supported on the upper end of the pump 102. The lever 105 is also pivotally connected by means of a stud 110 with the upper end of the piston 104. A ball check valve 111 is provided at the lower end of the cylinder 103 and is arranged to facilitate admission of fluid from the pipe 101 into a cylinder chamber 112 when the piston 104 is moved upwardly but is arranged automatically to close to prevent downward passage of fluid from the cylinder 112.

An air vent valve 113 is provided in the cylinder 103 by means of which air within the system may be readily exhausted when desired. A manually operable threaded sleeve 114 normally holds the valve 113 closed, that is, fixed to its seat formed in the cylinder member 103. When it is desired to exhaust air within the hydraulic system and the cylinder 103, the sleeve 114 is loosened so that the valve 113 may be opened to facilitate exhaust of air therefrom. After air has been exhausted from the system, the sleeve 114 is then tightened. A spring-pressed ball check valve 115 is provided to allow the passage of fluid under pressure from the cylinder chamber 112 on the down stroke of the piston 104. The ball check valve 115 is a spring-closed valve which prevents fluid from passing back into the cylinder chamber 112. A manually operable valve 116 is interposed between the pipes 97 and 101 by means of which fluid within the cylinder chamber 98 and the pipe 97 may be exhausted into the reservoir 100 when it is desired to obtain the maximum driving speed of the motor.

In the position of the parts as shown in Fig. 5, the motor 70 is swung into a position so that its maximum driving speed is imparted to the mechanism. In this position, the piston 93 engages an end cap 117 which encloses the right-hand end of the cylinder 90. When it is desired to reduce the effective driving speed of the motor, the valve 116 is closed. The manually operable lever 105 is then moved upwardly to raise the piston 104 which serves to draw fluid from the reservoir 100 and pipe 101 through the ball check valve 111 to fill the cylinder chamber 112 with fluid. The lever 105 is then moved downwardly. As soon as the up movement of the lever 105 ceases, the ball check valve 111 closes, and the down movement of the lever 105 produces a down movement of the piston 104 which forces fluid within the cylinder chamber 112 through the ball check valve 115 and the pipe 97 into the cylinder chamber 98 to move the cylinder 90 together with the pivotally mounted bracket 71 and motor 70 in a counterclockwise direction so as to increase the center distance between the motor shaft 75 and the jack shaft 84. During this movement, the pull on the driving belt 82 due to the increased center distance causes the cone-shaped disk 77 to move away from the cone-shaped disk 76 against the compression of the spring 78 so as to reduce the effective diameter of the driving cones 76 and 77. The change in speed is incremental and the extent of reduction is determined by the number of strokes of the control lever 105 and piston 104. Each time the piston 104 is raised and then lowered, an additional quantity of fluid is forced from the pump chamber 112, through the ball check valve 116 and pipe 97, into the cylinder chamber 98 to move the cylinder 90 in a direction toward the right (Figs. 2 and 5) which serves to rock the bracket 71 and motor 70 also in a clockwise direction to increase the center distance

between the motor shaft 75 and the jack shaft 84, thus decreasing the effective driving speed of the motor 70 to slow down the speed of the work supporting table 20.

When the motor 70 together with its supporting bracket 71 are positioned to impart a reduced driving speed to the mechanism and it is desired to increase the effective speed of the motor 70, the valve 116 is manually opened to allow fluid to exhaust from the cylinder chamber 98, through the pipe 97, through the valve 116 and the pipe 101, into the reservoir 100. By manipulation of the valve 116, the effective driving speed of the motor 70 may be increased to the desired extent.

The operation of this improved grinding machine driving mechanism will be readily apparent from the foregoing disclosure. The table dogs 43 and 44 are adjusted to produce the desired reciprocatory stroke of the table 20. The speed reduction unit 55 is adjusted to the desired and predetermined speed combination by manipulation of the clutches 59 and 67, after which the machine may be set in motion. If a reduction in the effective driving speed of the motor 70 is desired, the valve 116 is closed and the pump lever 105 is moved up and down to draw fluid from the reservoir 100, through the pipe 101 and ball check valve 111, into the cylinder chamber 112 on the up stroke of the piston 104. On the down stroke of the piston 104, the fluid within the cylinder chamber 112 is forced outwardly through the ball check valve 115 and pipe 97 into the cylinder chamber 98 to move the cylinder 90 together with the bracket 71 and the motor 70 in a counterclockwise direction, thus lengthening the center distance between the motor shaft 75 and the jack shaft 84 to decrease the effective driving speed of the motor 70. It will be readily apparent that one or more strokes of the manually operable pump lever 105 may be had to effect the desired shifting movement of the motor to reduce its effective driving speed to the desired and predetermined extent. At the start of the operation of the speed adjusting mechanism, if air is encountered within the system, the air vent valve 113 may be opened on the initial stroke of the manually operable pump lever 107 to exhaust air from the system, after which the valve may be closed and remains closed during the operation of the machine. If the effective speed of the motor 70 is reduced and it is desired to increase the effective driving speed, this may be accomplished by manual manipulation of the valve 116 as above described.

It will thus be seen that there has been provided by this invention apparatus in which the various objects hereinabove set forth together with many thoroughly practical advantages are successfully achieved. As many possible embodiments may be made of the above invention and as many changes might be made in the embodiment above set forth, it is to be understood that all matter hereinbefore set forth or shown in the accompanying drawings is to be interpreted as illustrative and not in a limiting sense.

We claim:

1. In a grinding machine having a base, a transversely movable rotatable grinding wheel, a longitudinally reciprocable table, means including a reversing clutch to reciprocate said table, a rotatable drive shaft in the base, a driving belt connecting said shaft with said clutch, an electric driving motor pivotally mounted on said base, yieldable opposed driving cones on said motor shaft, a driving belt drivingly connecting said shaft and the driving cones, and a fluid pressure system including a piston and cylinder operatively connected to adjust the position of said motor, a fluid pump to convey fluid under pressure to said cylinder to swing said motor so as to decrease the effective driving speed of the motor, and means including a valve to control the exhaust of fluid from said cylinder to swing said motor so as to increase the effective driving speed of said motor.

2. In a grinding machine having a base, a transversely movable rotatable grinding wheel, a longitudinally reciprocable table, means including a reversing clutch to reciprocate said table, a rotatable driving shaft in said base, a driving belt connecting said shaft with said clutch, an electric driving motor pivotally mounted on said base, yieldable opposed driving cones on the motor shaft, a driving belt drivingly connecting said shaft and driving cones, and a fluid pressure system including a piston and cylinder operatively connected to adjust the position of said motor, a manually operable fluid pump to convey fluid under pressure in one direction to said cylinder to swing said motor so as to decrease the effective driving speed of said motor, and means including a manually operable valve to control the exhaust of fluid in the opposite direction from said cylinder to swing said motor so as to increase the effective driving speed of said motor.

CARL G. FLYGARE.
STEWART S. MADER.