E. H. MEYER.

AUTOMATIC MATCH LIGHTER.

APPLICATION FILED MAR. 29, 1909.

929,683. Patented Aug. 3, 1909.

4 SHEETS—SHEET 1.

FIG. 1.

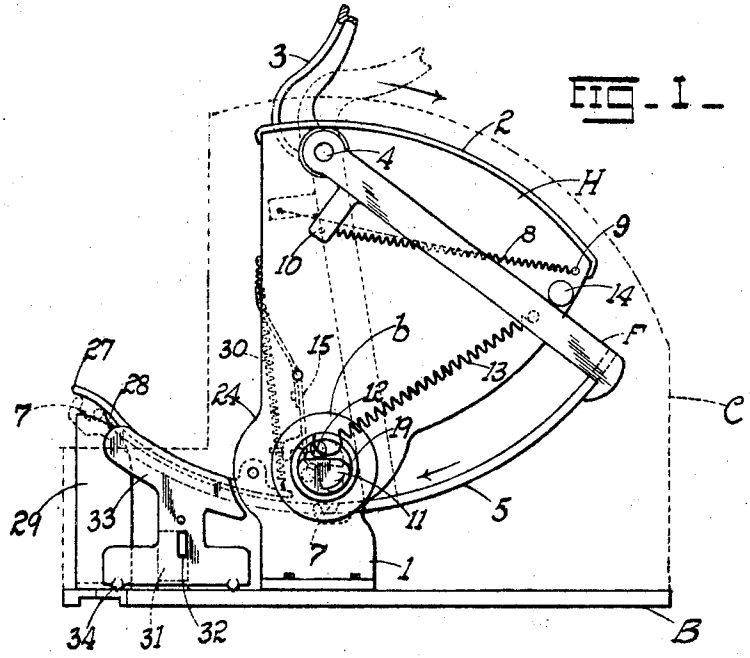

FIG. 2.

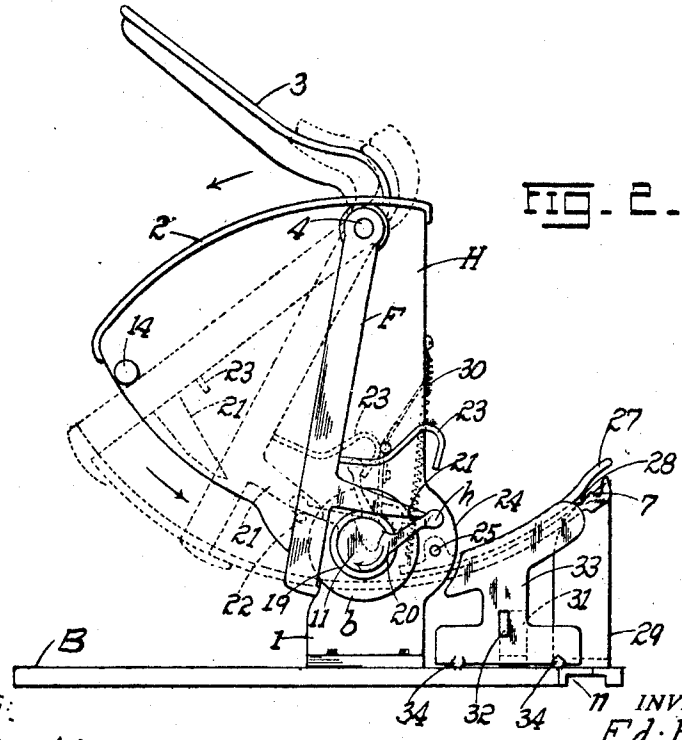

WITNESSES:

Harry A. Beiner.

Jos. A. Michael

INVENTOR.

Ed. H. Meyer.

BY

Emil Klarer

ATTORNEY.

ANDREW. B. GRAHAM CO., PHOTO-LITHOGRAPHERS. WASHINGTON, D. C.

E. H. MEYER.

AUTOMATIC MATCH LIGHTER.

APPLICATION FILED MAR. 29, 1909.

929,683.

Patented Aug. 3, 1909.

4 SHEETS—SHEET 2.

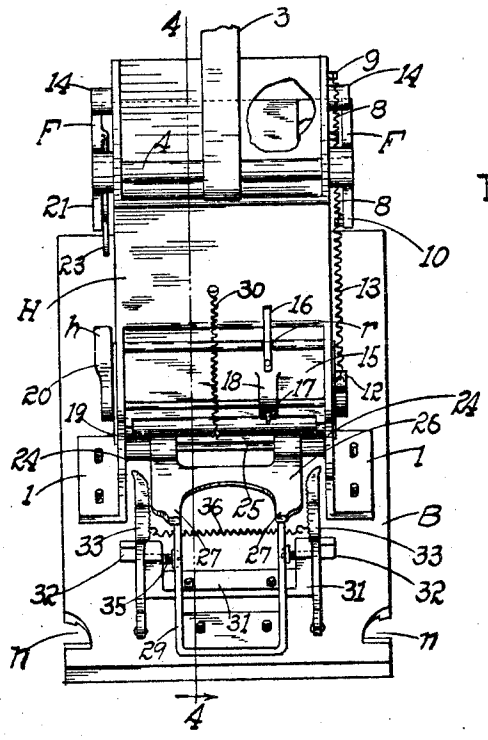

FIG. 3.

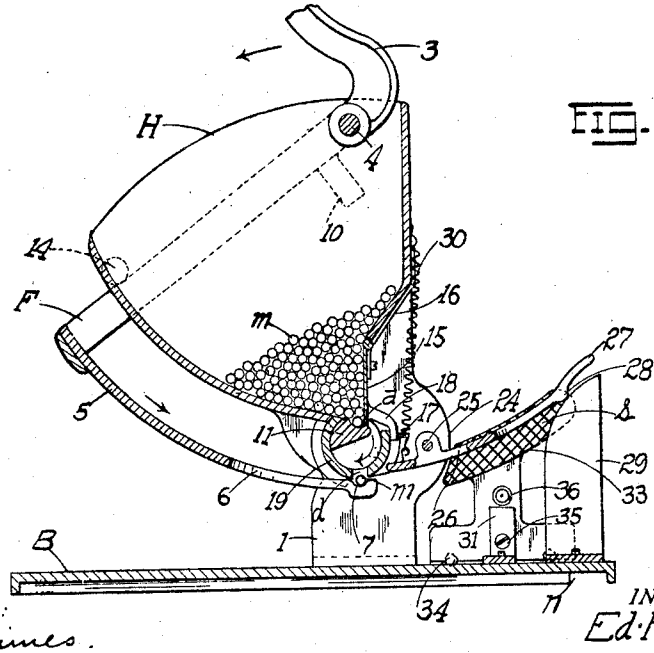

FIG. 4.

WITNESSES:

Harry A. Beimes.

Jos. A. Michel

INVENTOR.

Ed. H. Meyer.

BY

Curt Starck

ATTORNEY.

ANDREW B. GRAHAM CO., PHOTO-LITHOGRAPHERS, WASHINGTON, D. C.

E. H. MEYER.

AUTOMATIC MATCH LIGHTER.

APPLICATION FILED MAR. 29, 1909.

929,683.

Patented Aug. 3, 1909.

4 SHEETS—SHEET 3.

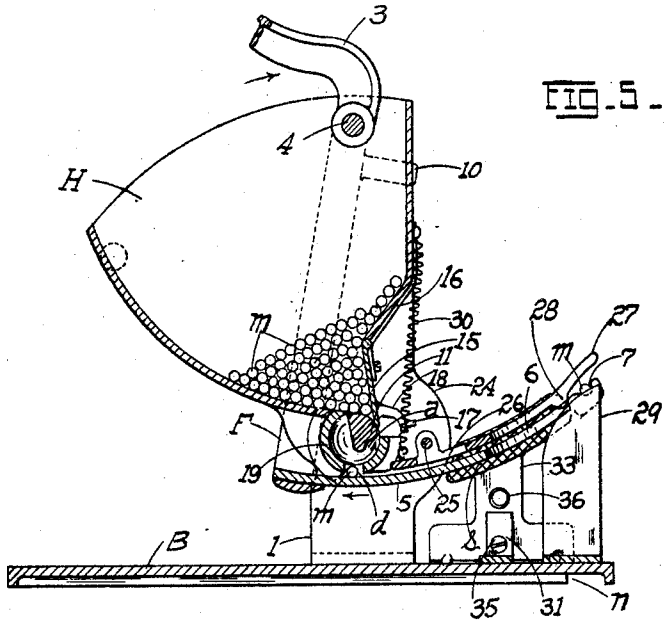

FIG. 5.

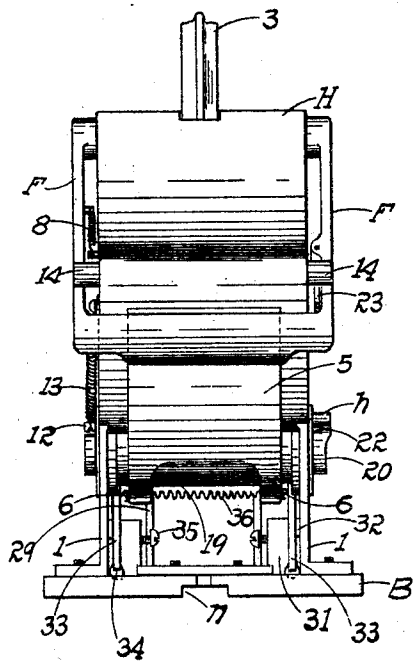

FIG. 6.

WITNESSES:

Harry A. Beimer

Josamichel

INVENTOR.

Ed. H. Meyer.

BY

Emil Starer

ATTORNEY.

ANDREW. B. GRAHAM CO., PHOTO-LITHOGRAPHERS, WASHINGTON, D. C.

E. H. MEYER.

AUTOMATIC MATCH LIGHTER.

APPLICATION FILED MAR. 29, 1909.

929,683.

Patented Aug. 3, 1909.

4 SHEETS—SHEET 4.

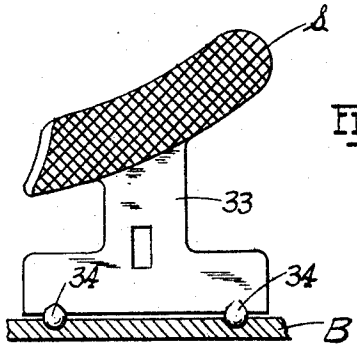

Fig. 7.

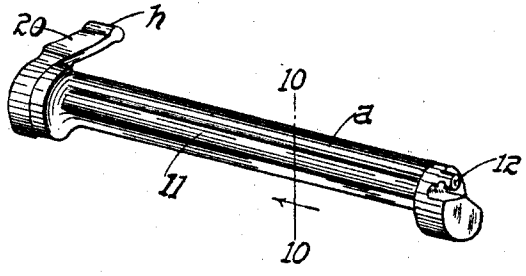

Fig. 8.

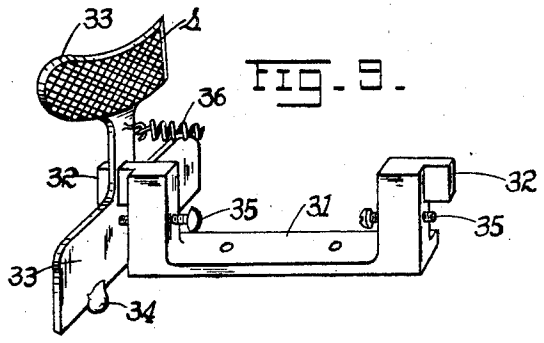

Fig. 9.

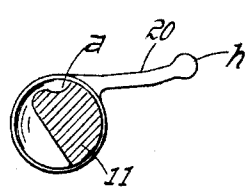

Fig. 10.

WITNESSES:

Harry A. Beimes

Jos. A. Michel

INVENTOR.

Ed. H. Meyer.

BY Ernest Stuart

ATTORNEY.

ANDREW. B. GRAHAM CO., PHOTO-LITHOGRAPHERS. WASHINGTON, D. C.

UNITED STATES PATENT OFFICE.

EDWARD H. MEYER, OF MOUNT OLIVE, ILLINOIS.

AUTOMATIC MATCH-LIGHTER.

No. 929,683. Specification of Letters Patent. Patented Aug. 3, 1909.

Application filed March 29, 1909. Serial No. 486,579.

To all whom it may concern:

Be it known that I, EDWARD H. MEYER, a citizen of the United States, residing at Mount Olive, in the county of Macoupin and State of Illinois, have invented certain new and useful Improvements in Automatic Match-Lighters, of which the following is a full, clear, and exact description, reference being had to the accompanying drawings, forming a part hereof.

My invention has relation to improvements in automatic match lighters; and it consists in the novel construction and arrangement of parts more fully set forth in the specification and pointed out in the claims.

In the drawings, Figure 1 is a side elevation of my invention (casing removed and shown in dotted outline) with parts in normal position, the operating handle or lever being partly broken; Fig. 2 is a side elevation taken from the opposite side of the device, with parts shown in position for the discharging of a match, the normal and intermediate positions being shown dotted; Fig. 3 is a front elevation taken along a line about forty-five degrees to the horizontal, the parts being shown in normal position; Fig. 4 is a vertical transverse section on the line 4—4 of Fig. 3; Fig. 5 is a similar section with parts corresponding however, to those shown in Fig. 2 or in position for the discharge of one match and the lighting of the match previously discharged; Fig. 6 is a rear elevation of the device; Fig. 7 is a detached inside elevation of one of the scratch plates, with a section of the bed plate in which it is fulcrumed; Fig. 8 is a perspective view of the cut-off cylinder or valve detached; Fig. 9 is a perspective of the guide-bracket for the scratch plates, showing one of the plates in position and a portion of the spring connecting the plates; and Fig. 10 is a cross section on the line 10—10 of Fig. 8.

The object of my invention is to construct an automatic match lighting device which will light one match at a time out of an initial supply stored in the hopper or receptacle of the lighter, the special object sought being to construct a machine which will be positive and certain of operation; one which shall be simple in its make-up; one which may be readily adjusted to any length of match on the market; one which may be readily assembled; one which shall be light, durable, and composed of a minimum number of parts; one not easily put out of order, and which shall be cheap; and one possessing further and other advantages better apparent from a detailed description of the invention which is as follows:

Referring to the drawings, B represents a base plate provided with notches *n*, *n*, for engaging locking lugs of an outer casing C (shown only in dotted lines as it is not concerned with the invention proper) the plate having secured thereto a suitable hopper H provided with flanged legs or feet 1 through which the securing screws are passed, the hopper having a front vertical wall and a rear curved wall as shown, and closed by a curved cover plate 2 which is cut away sufficiently to allow for the projection therethrough of the operating handle or lever 3. The fixed end of the lever 3 is secured at the center of a rock-shaft 4 mounted between the side walls of the hopper adjacent to the top of the front vertical wall thereof, the projecting ends of the shaft having secured thereto the ends of the side arms of a U-shaped oscillating frame F, the base of which extends considerably beyond the curved wall of the hopper as shown. To the basal member of the frame F is secured a curved cradle 5, the forward portion of which terminates in the forks or arms 6 which are provided on top near their free ends with alining grooves 7 which jointly receive the match *m* previously deposited on the body portion of the cradle as subsequently to be explained. Normally, the position of the frame F is such as to bring the ends of the forks or arms 6 opposite the discharge mouth of the hopper (Fig. 1) the parts being held in this position by the contracting spring 8, one end of which is secured to a pin 9 at the rear of one of the side walls of the hopper, the opposite end of the spring being secured to the end of an arm or lug 10 formed with one of the arms of the frame F at a point near the rock-shaft 4. The curved rear wall of the hopper converges toward the front vertical wall, there being formed at the line of convergence a discharge opening or mouth permanently closed by a cut-off rocker-member or cylinder 11, the body of the member instead of being cylindrical in cross-section being preferably reduced to substantially a semi-cylinder to

avoid excess of metal (see Figs. 4, 8 and 10). though its terminals are cylindrical as shown to afford proper bearings therefor in the bosses *b* formed for their reception in the bottoms of the side walls of the hopper. The face of one of the cylindrical terminals of the cut-off 11 is recessed or notched, leaving a terminal pin 12 positioned eccentrically to the axis or rotation of the cut-off (Fig. 1) said pin serving as an anchor for one end of a contracting spring 13, the opposite end of which is secured to the side wall of the hopper at a point opposite the adjacent arm of the U-shaped frame F when the latter is occupying its normal position. It may be stated in passing that the frame F is arrested when it reaches what should be its normal position, by the arresting lugs or pins 14 projecting from the rear upper portions of the side walls of the hopper.

Formed in the cut-off member 11 opposite the discharge mouth of the hopper is a match-receiving and discharging groove *a*, which, for the normal position of the handle lever 3 and the frame F, points upwardly into the hopper (Fig. 4) and in this position it always has a single match *m* lodged therein. Now, bearing against the semi-cylindrical surface of the cut-off 11 along a line close to the edge of the groove in which the match is resting, is the free edge of an oscillating apron or wiper 15 which is hinged at the base of the terminal inwardly inclined continuation of the front vertical wall of the hopper (Fig. 4) said apron being caused to hug the cut-off by virtue of the resiliency of a flexed spring 16 whose fixed end is secured to the outside of the apron, the spring extending across the hinge axis of the apron and its free end bearing against the base of the vertical front wall of the hopper. As shown (Figs. 3, 4) the hinge is recessed to allow the spring 16 to lie close to the wall, the recess (*r*) likewise preventing any accidental lateral displacement of the spring. The degree or closeness with which the apron shall hug or wipe the semi-cylinder 11 is accurately adjusted by the adjusting screw 17 carried by a curved arm 18 on the apron, the inner end of the screw being made to engage the wall of the transversely disposed tubular guide or chute 19 (inclosing the cut-off 11) into which the matches are first received before being deposited on the cradle 5, said chute being provided with a bottom slit or discharge mouth *d* through which the match is properly directed to land accurately and transversely across the cradle 5. The turning or rocking of the cut-off 11 sufficiently to discharge its match is accomplished by a rearward depression or oscillation of the lever 3, an action which is manifestly attended with a forward oscillation of the frame F and its cradle 5 (Fig. 4). Now, the cut-off rock cylinder 11 is provided at the opposite end with a radial arm 20 terminating in a rounded impact head *h* which, as the frame F thus oscillates forwardly (upon a depression of the operating lever 3) is engaged by a tappet arm or finger 21 formed with the adjacent arm of the U-shaped frame F, and as the tappet 21 strikes the arm 20 it oscillates it forwardly thereby rotating or rocking the member 11 about its axis. In this rotation the match in the groove *a* is crowded toward the apron 15 (Fig. 4), the remaining matches being cut off since only one match can lodge in the groove *a*, the edge of the apron bearing or wiping against the cylindrical periphery of the cut-off during the rotation of the latter and until the cut-off has rotated to bring the groove *a* beyond the edge of the wiper by which time the match drops out of the groove into the chute 19 (Fig. 5). Of course, to accomplish the result just referred to, the lever 3 should be depressed its full limit, or until the free oscillating end of the frame F is arrested by the legs 1, of the hopper (Figs. 2, 5). Upon a release of the handle 3, it, together with the frame F and cradle 5, is restored to normal position by the contraction of the spring 8; the cut-off 11 on the other hand is restored to its normal position by the contraction of the spring 13, the parts being properly arrested by a pin 22 which contacts with the arm 20.

Of course, the purpose of the wiper or apron 15 is to form a yielding wall for the passage of the match out of the hopper and yet hold back all other matches, and it sometimes happens that a sliver may lodge between the edge of the wiper and cylinder 11 preventing a proper return of the latter to its normal position, the power of the spring 13 being insufficient to turn the cylinder owing to the presence of the sliver. To assist the spring in rocking back the cylinder 11 to its normal position, I provide a forwardly projecting hook 23 on the side of the arm carrying the finger 21, which is so positioned as to clear the arm 20 before the latter is engaged by the tappet 21, but which will engage the front face of the arm on the return or released stroke of the lever 3 should the arm "stick" and not be sufficiently responsive to the draft of the spring 13 which tends to return it to normal position, but can not owing to the presence of the sliver between the wiper and cut-off cylinder (see dotted engagement between parts 23 and 20, Fig. 2). To allow the apron to engage the cylinder 11, a portion of the peripheral wall of the guide tube or chute 19 is cut away as shown; obviously during the ejection of a match from the cylinder 11, the apron will have imparted thereto a slight outward oscillation, but not very much, the degrees depending on the thickness of any particular match.

Between a pair of basal lobes or cheeks 24

formed at the front edges of the side walls of the hopper is a cylindrical rod 25 serving as a bearing for a vertically oscillating or yielding frome or jaw 26, the front portion having the greater part of the metal removed thereby forming fork members 27, the bottoms of which are provided with inner lobes or ears 28 which normally bear against the curved edges of the arms of a U-shaped bracket 29 secured to the base plate B. The members 27 are forced into yielding engagement with said bracket by the contacting spring 30, one end of which is secured to the front vertical wall of the hopper, the opposite end being secured to the rearward extension of the frame 26 on the opposite side of the rod 25. This rearward extension therefore, corresponds to the short arm of a lever pivoted to the rod 25, the long arm of which is composed of the main body of the jaw 26 and its fork members 27. The purpose of this jaw or yielding frame is to prevent displacement of a match when once it has lodged in the grooves 7 of the cradle, during the scratching operation, as presently to be seen. Immediately to the rear of the bracket 29 there is secured to the plate B a shallow U-shaped plate or bracket 31 from the rear vertical edges of whose terminal arms project outwardly suitable guide arms or members 32 which pass loosely through proper openings formed in the central portions of the yielding and oscillating "scratch" plates 33. The latter have an expanded base provided with projections or pegs 34 loosely received in sockets formed in the plate B, and an expanded head provided on the inner face with a roughened match-scratching surface *s*, said roughened surfaces being positioned so as to come in contact with the head of the match *m* lying in the grooves 7 of the cradle arms 6, the particular scratching surface to be brought into requisition depending on which end of the match-stick the head happens to be on. The roughened heads of the scratch plates as shown conform to the general curvature of the arc through which the cradle 5 oscillates, the match while being scratched being held down by the resilient jaw 26. Since some matches are longer than others, the initial distance between the scratch plates 23 may be carefully adjusted by the screws 35 in the vertical arms of the bracket 31 which screws limit the oscillation or movement of the plates inwardly according to the length of match intended to pass between them, the plates being caused to close against the ends of the match by the contracting action of the spring 36 by which the plates are united.

The operation of the lighter will be readily understood from the description in which the functions of the several parts have already been set forth. The hopper H having been supplied with the matches *m*, and the parts in normal position as shown in Figs. 1, 3, 4, the operator depresses the lever 3 its full limit, oscillating it rearward or as shown by arrows in Figs. 1, 2, 4, this action causing the finger or tappet 21 to strike the arm 20 and oscillate the same in proper direction to cause the cut-off cylinder 11 to rotate toward the apron or wiper 15 (the rotation being to the right in Figs. 4 and 5), the match resting in the groove *a* of said cut-off passing beyond or outside the edge of the apron and dropping into the chute 19 (Fig. 5). The match then falls through the slot *d* of the chute and is deposited on the body of the cradle 5 on which it is supported for the full return or backward stroke of the cradle. To effect such return, the operator releases the lever 3, whereupon the spring 8 restores the parts to normal position. The parts thus restored to their first position bring the grooved portions 7 of the forked ends 6 of the cradle under the slot *d*, permitting the match *m* which rested upon the cradle (and which could not move from the position in the slot *d*) to drop into the grooves 7. The operator again depresses the lever 3, causing the cradle 5 to oscillate forward, the match *m* resting in the grooves 7 being carried forward under the jaw or frame 26 and forked ends 27 thereof, and between the scratch-members 33, the head of the match rubbing against the rough surface *s* of one of the members and lighting. With this second depression of the lever 3 of course, another match is deposited on the cradle which upon release of the parts again drops into the grooves 7 of the cradle arms resuming their normal position under the slot *d*. It follows therefore, that after the first operation or depression of the lever 3 there will always be a match deposited in the grooves 7 to be lighted by persons who may come after the first smoker or party who had occasion to light a match. A match which has been lighted will pass under the yielding jaw 26 and forks 27 thereof; and as the cradle arms 6 recede to resume their normal position upon release of the lever 3, the lighted match is held back by the forks 27 which hold it frictionally against the curved edges of the vertical arms of the bracket 29 (Fig. 1). The burning match can then be withdrawn from between the bracket 29 and the forks 27 of the jaw 26 and the cigar or pipe lighted, or the match may be used for any other suitable purpose. Of course the removal of the lighted match leaves the grooves 7 free to receive the next match resting and left deposited on the cradle between the sides of the slot *d* of the chute 19, with any particular depression of the operating lever 3. As previously described, the cut-off 11 is restored to its original position with the release of the operating lever, by the contrac-

tion of the spring 13; and should the cut-off stick, it will be assisted back by the hook 23 engaging or seizing the arm 20 and thus rocking the cut-off cylinder 11 back to normal position with its match receiving and discharging groove *a* pointing into the hopper (Figs. 1, 4). While the jaw 26 serves to prevent accidental upward displacement of the match resting in the grooves 7 of the cradle-arms 6, it at the same time serves to temporarily hold the burning match between the forks 27 and the match supporting bracket arms 29, permitting the match to be seized and withdrawn. In this temporary retention of the match, the latter virtually rests against and in front of the lobes or ears 28 which arrest the match against falling or rolling down the incline of the curved edges of the arms of the bracket 29, should the pressure of the jaw-arms 27 upon the match be insufficient to hold it. The ears 28 thus have a special function to perform in this connection (Fig. 1), in that they effect a positive retention of the match left behind upon a return of the cradle 5 to its original position. The spring 36 is sufficiently yielding to allow all the matches to pass between the scratch surfaces *s* of the yielding members 33, and should the matches be too short or too long, the distance between the members 33 may be accurately adjusted by the screws 35, the latter determining the limits of the inner oscillations or movements of said scratch members. After the first depression of the lever 3 there will always be a match resting on the cradle arms ready to strike, so that all persons coming after the first need depress the lever 3 but once to get results. There will always be but one match in the groove *a* of the cut-off 11 so that only one match at a time can be projected into the chute 19.

Having described my invention, what I claim is:—

1. In a match-lighter, a suitable hopper, a rotatable cut-off for the matches having a groove formation for the reception of a single match, a hinged apron or wiper bearing with its free edge against the surface of the cut-off, means on the outside of the hopper for rotating the cut-off through an arc to cause the groove thereof to pass outside the apron and discharge the match, and a cradle for catching the match thus discharged, substantially as described.

2. In a match-lighter, a suitable hopper, a rotatable cut-off for the matches having a groove formation for receiving a single match, a hinged apron having its free edge bearing against the surface of the cut-off, a cradle oscillating below the discharge mouth of the hopper, intermediate connections between the cradle and cut-off for rocking the latter upon oscillation of the cradle in one direction, thereby advancing the groove of the cut-off past the edge of the apron and discharging the match and depositing it on the cradle, means on the cradle for seizing the match and moving the same a suitable distance beyond its point of discharge from the hopper, with a subsequent oscillation of the cradle in the same direction, and scratching members in the path of movement of the ends of the match for scratching the head of the match, substantially as set forth.

3. In a match-lighter, a suitable hopper, a rotatable cut-off cylinder closing the discharge mouth thereof, and provided with a groove for receiving a match, a hinged apron bearing with its free edge against the surface of the cylinder along a line to one side of the groove, an oscillating frame embracing the sides and bottom of the hopper, a curved cradle attached to said frame and oscillating beneath the discharge mouth of the hopper, a chute surrounding the cut-off and provided with a discharge slot, adjacent to the upper surface of the cradle, an arm at one end of the cut-off, a tappet on the oscillating frame adapted to engage the arm and rock the cut-off through an arc to cause the groove thereof to pass outside the apron and discharge the match into the chute, and thence on the cradle upon oscillation of the frame and cradle in one direction, a lever for actuating the frame, a spring for restoring the aforesaid parts to normal position upon release thereof, the cradle being provided with a groove at its free end for receiving the match deposited therein with a return of the cradle to original position, and scratch-members disposed in the path of movement of the match held in the groove of the cradle upon a subsequent oscillation of the cradle in the same direction, a second match being discharged and deposited on the body of the cradle in such second oscillation from its normal position, substantially as described.

4. In a match-lighter, a suitable hopper, a cut-off at the discharge mouth thereof, means for actuating the cut-off and effecting the discharge of a single match, a reciprocating cradle for receiving the deposit of the match thus discharged, upon a forward stroke of the cradle, means on the end of the cradle for seizing the match on the return stroke of the cradle and subsequently advancing the match beyond its point of discharge from the hopper on the next forward stroke, and scratching devices in the path of the match thus advanced, substantially as described.

5. In a match-lighter, a suitable hopper, a cut-off for effecting successive discharges of the several matches stored in the hopper, a chute for receiving the matches discharged from the hopper, and provided with a discharge slot, a reciprocating cradle controlling the cut-off and operating in close prox-

imity to the slot of the chute, the match discharged from the hopper on the forward stroke of the cradle resting between the sides of the slot on top of the cradle during the return stroke of the cradle, the front end of the latter being provided with grooves assuming a position under the slot upon the end of the return stroke of the cradle and receiving the match thus released from the slot, said match being advanced a suitable distance beyond the slot upon the next forward stroke of the cradle, and igniting devices for scratching the end of the match thus advanced, substantially as described.

6. In a match-lighter, a suitable hopper, means for discharging one match at a time therefrom, a pair of spring controlled oscillating scratching members, placed in opposed relation in the path of the ends of the match, a reciprocating cradle for receiving the matches from the hopper and passing them between the scratch members, means for adjusting the degree of oscillation of the members according to the length of match passing between them, and means for guiding the members in their oscillatory movements, substantially as described.

7. In a match-lighter, a pair of scratch members, fulcrumed to oscillate about their lower edges, a spring connecting the said members, a bracket having outwardly extending arms passed through suitable openings in said members for guiding and supporting the same, a bracket having arms located in advance of the members, a suitable hopper, discharging one match at a time, a vertically oscillating member or jaw secured to the hopper and having ear formations resting on the edges of the arms of the last mentioned bracket, a reciprocating cradle having forked terminals operating between the scratch members and beneath and in close proximity to the jaw aforesaid, the terminals of the fork members being provided with grooves for the support of a match, the ends of which engage the scratch members aforesaid, the match being intercepted by the ears of the jaw and left supported on the arms of the last named bracket, after ignition, substantially as described.

In testimony whereof I affix my signature, in presence of two witneses.

EDWARD H. MEYER.

Witnesses:

EMIL STAREK,

JOS. A. MICHEL.