V. G. & M. FASTIGGI.

HOT AIR APPARATUS.

APPLICATION FILED FEB. 14, 1912.

1,068,637.

Patented July 29, 1913.

2 SHEETS—SHEET 1.

Fig. 2.

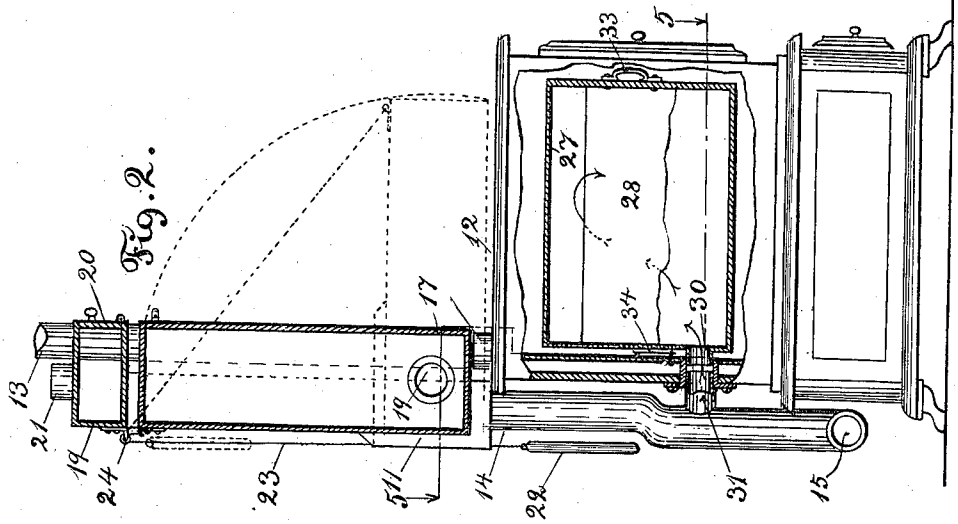

Fig. 1.

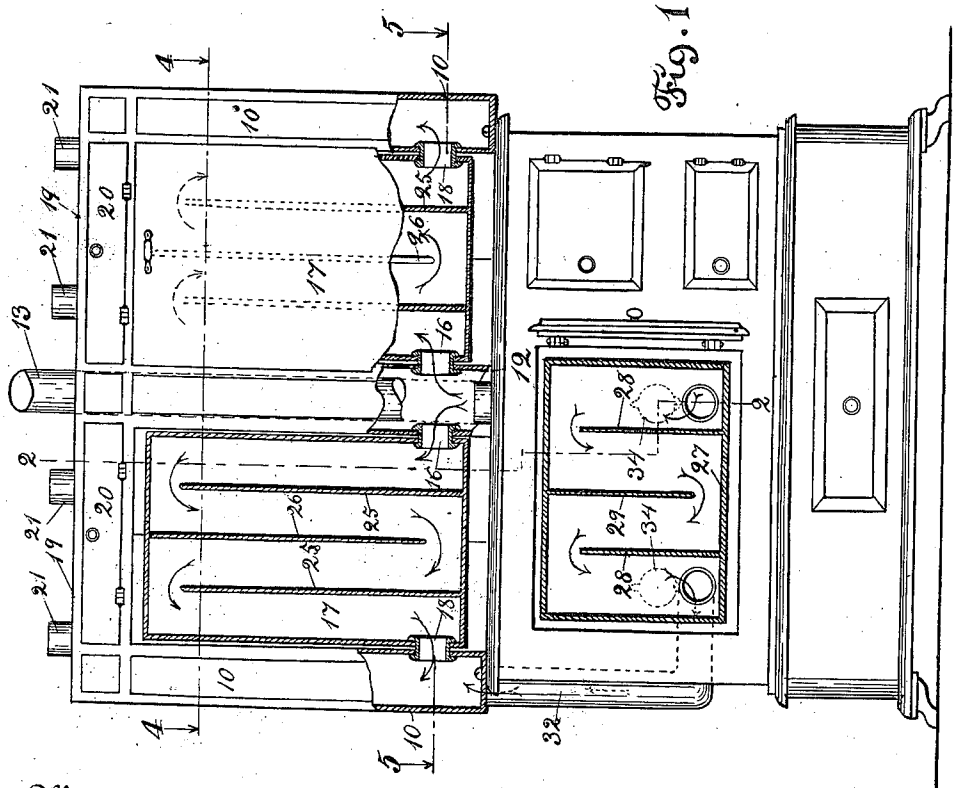

Witnesses:
Daniel M. Randine
Bertha E. Henry.

Inventors
Vit. Gaetano Fastiggi
Michele Fastiggi

V. G. & M. FASTIGGI.

HOT AIR APPARATUS.

APPLICATION FILED FEB. 14, 1912.

1,068,637.

Patented July 29, 1913.

2 SHEETS—SHEET 2.

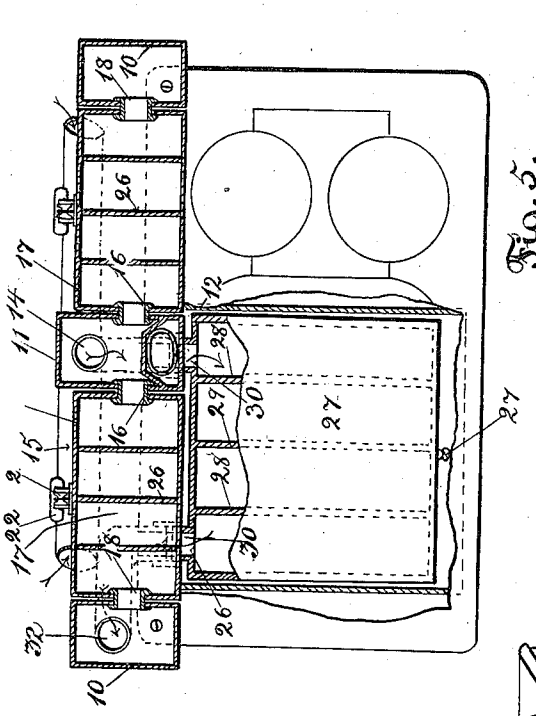

Fig. 5.

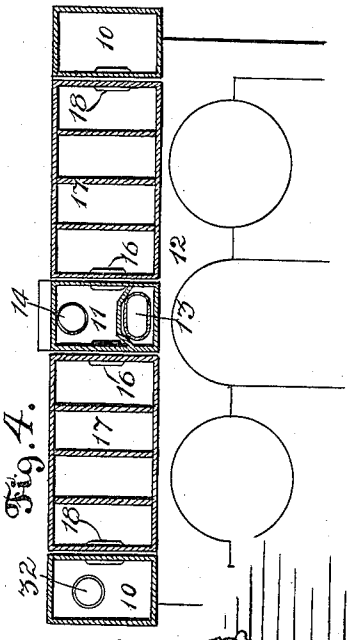

Fig. 4.

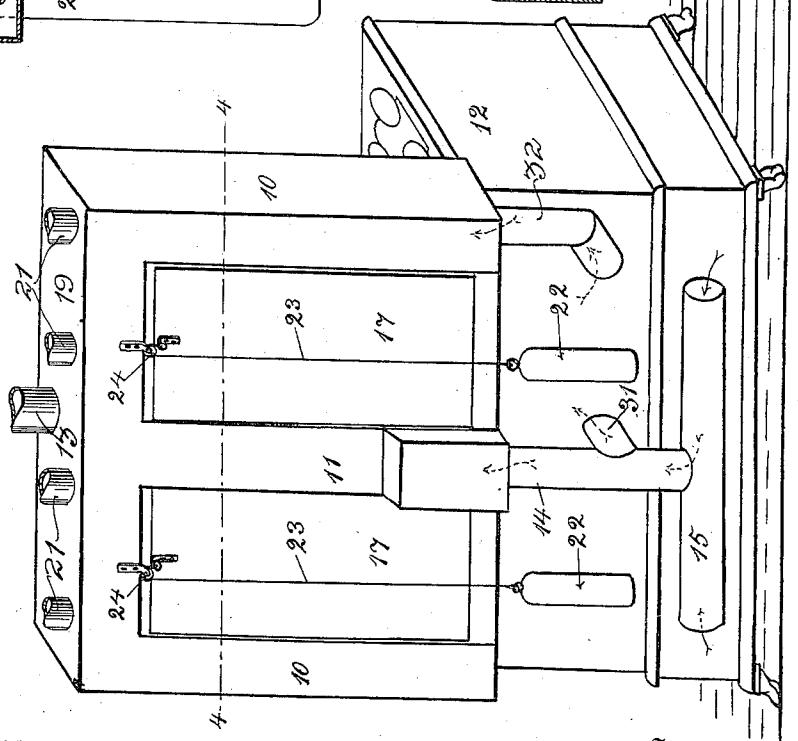

Fig. 3.

Witnesses:
Daniel W. Rantine
Bertha E. Henry.

Inventor
Vit. Gustavo Fastiggi
Michele Fastiggi

UNITED STATES PATENT OFFICE.

VITO GAETANO FASTIGGI AND MICHELE FASTIGGI, OF NEW YORK, N. Y.

HOT-AIR APPARATUS.

1,068,637. Specification of Letters Patent. Patented July 29, 1913.

Application filed February 14, 1912. Serial No. 677,594.

To all whom it may concern:

Be it known that we, VITO G. FASTIGGI and MICHELE FASTIGGI, citizens of the United States, residing in the city of New York, county of New York, and State of New York, have invented new and useful Improvements in Hot-Air Apparatus, of which the following is a specification.

This invention relates to improvements in hot air apparatus and particularly to that class adapted for use in connection with kitchen stoves and ranges, and its objects are:—First, to provide devices for the economical conservation of heat, derived from consuming fuel conveying any excess to remote apartments in which it may be desired to raise the temperature. Second, to provide such apparatus in forms adaptable to any style of house range, whether built-in or self contained, in which is used any kind of fuel, as coal, wood, oil, or gas. Third, to provide means whereby fresh air, preferably from an outside source, may be thoroughly heated and delivered free from any odors or gases arising from the customary use of the range and without interfering with any of its functions, or with its draft.

Other objects, such as moderate cost of construction, non-liability of disorder, utilization of unoccupied space, ornamental appearance and the like, will become more fully apparent in the following specification and are also indicated in the annexed drawings, in which:—

Figure 1 is a front elevation of the apparatus, parts being broken away showing the interior. Fig. 2 is a sectional elevation taken on line 2—2 of Fig. 1. Fig. 3 is a perspective view looking from the rear. Fig. 4 is a partial transverse sectional view taken on line 4—4 of Fig. 1 and, Fig. 5 is a partial plan view of a range, parts being broken away showing the interior, and section of the apparatus taken on line 5—5 of Fig. 1.

The device comprises a pair of stationary, hollow cast or sheet metal standards 10 and in alinement with and midway between these standards is a similar third member 11, all of which are rigidly secured on the top of a range 12 at its rear, the outer standards being at the ends of the range and so disposed as not to conflict or interfere with the free use of the range openings or with operating the lids when supplying fuel or manipulating cooking utensils, the smoke and other products of combustion passing away through the pipe 13 arranged in the usual manner.

An air pipe 14, having its inlets 15 preferably extending out of the building so that pure fresh air may be obtained, enters the central standard 11 at the lower end thereof; the air passes through hollow trunnions 16 to the heating chambers 17 and outwardly therefrom through similar trunnions 18 to the outer standards 10 which are connected by the heat diffusing chamber 19, the latter serving as a bridge between the outer standards 10 and also is secured to the central standard 11.

From the heat diffusing chamber 19, which is provided with doors 20 so that the same can be used as a warming oven, the heat is conducted away by distributing ducts 21 provided with dampers (not shown) to control the current of hot air passing through on its way to such points as may be desired.

Returning to the heating chambers 17 it will be noticed that each is pivotally mounted between the outer standard 10 and the central member 11 upon the trunnions 16 and 18 in such manner as to swing clear of the heat diffusing chamber 19 and are adapted to be swung forward and downward until they rest upon the top of the range; this operation is assisted by the counterbalancing weights 22, attached to the chains or cords 23 running over the sheaves 24 and connected to the rear wall of the heating chambers. These chambers are provided with partitions 27 and 26 attached at their ends alternately to the top and bottom walls forming compartments but leaving a clear space at their unattached ends in such manner that the entering air current is caused to travel from one compartment to

another and to be subjected to heat derived from the range in its passage through the chambers. There is also provided an auxiliary heating chamber 27 adapted to be disposed within the main oven of the range which may be on either side of the fire-box; this chamber is similarly provided with partitions 28 and 29 for the same purpose as before described; it is also arranged with slip joints 30, which pass through openings made in the rear walls of the oven and connect with a tee 31 attached to the cold air inlet pipe and also with the standards 10 as indicated at 32.

When the oven is required for other purposes, as cooking, the auxiliary chamber may be withdrawn, a handle 33 being provided for that purpose, and the openings to the air connections may be covered by swinging plates or dampers 34. Thus it will be seen that the arrangement is highly economical, no extra fuel being consumed and also that the device supplies heat in the same manner as a house-heating furnace but without its attendant expense and trouble.

It will be evident that the heat derived from burning fuel, that has been hitherto wasted or worse than wasted by over heating the room in which the range is situated is, by this apparatus, conserved and made to effectively raise the temperature in other rooms than that in which the apparatus is placed.

Having thus described our invention what we claim as new and desire to secure by Letters Patent, is:—

1. In an apparatus of the class described, in combination with a range, a chamber pivotally supported over the range, partitions extending partially through said chamber attached at their ends alternately to the upper and lower walls of said chamber so that a tortuous air passage is formed therethrough, means for admitting air into said chamber, a second chamber horizontally disposed over the first named chamber, hollow standards for supporting said second chamber affording an air passage between the first and second chambers and flues leading from the last named chamber to points of air delivery.

2. In an apparatus of the class described, in combination with a range, a hingedly mounted air circulating chamber adapted to be disposed over the top of said range, a counter-balance therefor, rigid hollow vertical supports for said chamber at each end thereof, a distributing chamber communicating with said circulating chamber through said hollow supports, means for air entrance to said circulating chamber and air ducts leading from said distributing chamber.

3. In an apparatus of the class described, in combination with a range, a hingedly mounted air circulating chamber arranged to swing outward and downward upon the top of said range, hollow supports rigidly mounted on top of the range on each side of said circulating chamber and having air passages providing communication between said chamber and supports, partitions within said chamber adapted to cause a circulation of air therein, an air inlet communication with said circulating chamber and an air outlet from said hollow support.

4. In an apparatus of the class described, in combination with a range, air heating chambers pivotally mounted over the range to swing over and rest upon the top thereof, hollow supports at the sides and between said chambers, tubular trunnions connecting said supports to said chambers, an air distributing chamber connected with the side supports over said heating chambers, and an air inlet communicating with said heating chambers, through the inner support, means for causing the air to pass circuitously through said heating chambers and air outlets combined with said distributing chambers.

5. In an apparatus of the class described, in combination with a range, a hot air distributing chamber and main air heating chamber operatively disposed thereon, of a supplementary heating chamber removably disposed within the oven of said range, connections for admitting air to said supplementary heating chamber and other connections whereby the heated air is conveyed to the said hot air distributing chamber.

6. In an apparatus of the class described, in combination with a range, a plurality of air heating chambers operatively disposed thereon, and an air distributing chamber, of a supplementary heating chamber removably disposed within the oven of said range, connections for admitting air to said supplementary chamber, covers adapted to close said connections when not in use and other connections whereby the heated air is conveyed to said air distributing chamber and mingled with the air from said main heating chambers.

7. In an apparatus of the class described, in combination with a range, heating chambers hingedly mounted so as to swing downward upon the top of said range, a balancing counterweight for said chamber, hollow side supports for said chamber, a hollow central support, tubular trunnions affording air passages between said supports and said chambers, a heat receiving chamber over the heating chamber and communicating with the side supports, tubular connections adapted to convey air to said central support, an auxiliary heating chamber

adapted to be removably disposed within the said range, means of air communication between said auxiliary heating chamber and the said tubular connections, and means of air communication between said auxiliary heating chamber and said heat receiving chamber.

In testimony whereof we have hereunto signed our names to this specification in the presence of two subscribing witnesses.

VITO GAETANO FASTIGGI.
MICHELE FASTIGGI.

Witnesses:
DANIEL W. RANTINE,
BERTHA E. HENRY.

Copies of this patent may be obtained for five cents each, by addressing the "Commissioner of Patents, Washington, D. C."