A. GORDON.

SPRING BED-BOTTOMS.

No. 194,426. Patented Aug. 21, 1877.

Fig. 1

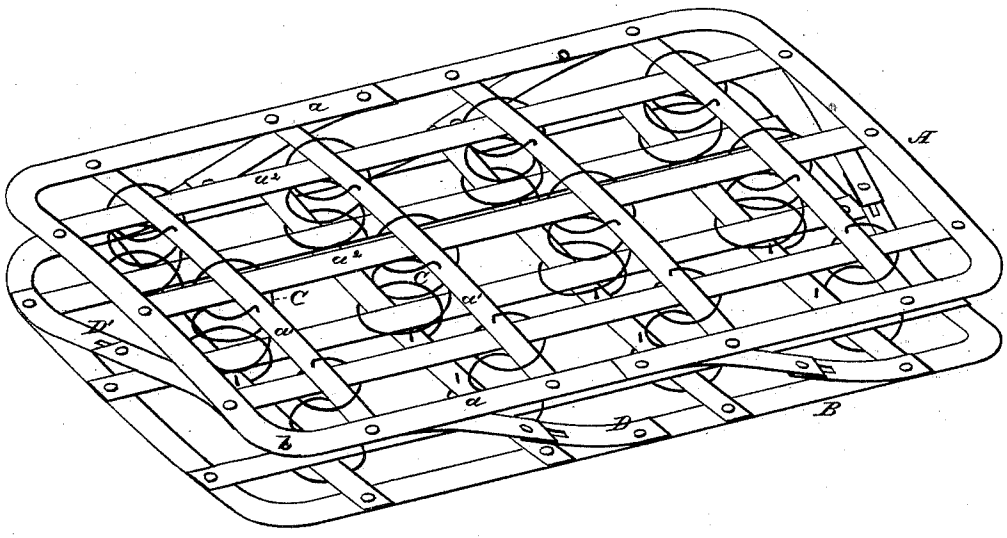

Fig. 2.

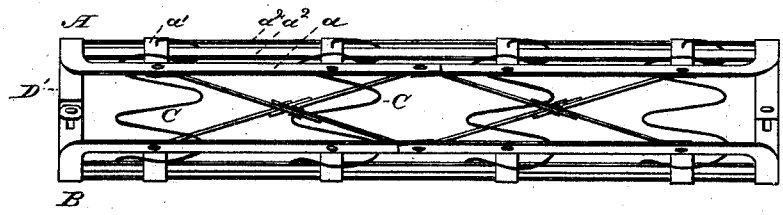

Fig. 3.

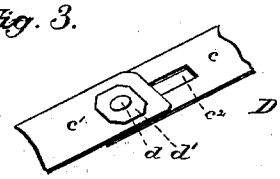

Attest:

S. W. Seely

R. N. Dyer.

Inventor:

Alfred Gordon

by Geo W Dyer & Co

attys

N. PETERS, PHOTO-LITHOGRAPHER, WASHINGTON, D. C.

UNITED STATES PATENT OFFICE.

ALFRED GORDON, OF WILLIAMSPORT, PENNSYLVANIA.

IMPROVEMENT IN SPRING BED-BOTTOMS.

Specification forming part of Letters Patent No. **194,426**, dated August 21, 1877; application filed May 26, 1877.

To all whom it may concern:

Be it known that I, ALFRED GORDON, of Williamsport, in the county of Lycoming and State of Pennsylvania, have invented a new and useful Improvement in Spring Bed-Bottoms; and I do hereby declare that the following is a full and exact description of the same, reference being had to the accompanying drawings, and to the letters of reference marked thereon.

My invention relates to that class of spring bed-bottoms having two metallic frames with interposed spiral springs, and its object is to construct such a bed-bottom so that it will better retain its shape, be more durable in use, and adapted to be fitted conveniently and closely to a bedstead, and packed flat for transportation.

My invention therein consists in the peculiar construction of the adjustable inclined braces or straps placed between the frames of the bed-bottom; and, further, in the construction and arrangement of the several parts composing my bed-bottom, as fully hereinafter explained.

To enable others skilled in the art to make and use my improvement, I proceed to describe the same, having reference to the drawings, in which—

Figure 1 is a perspective view of the bed-bottom; Fig. 2, a side elevation; and Fig. 3, a separate view of a part of one of the adjustable braces.

Like letters denote corresponding parts in each figure.

A and B are the top and bottom frames of the bed-bottom, and C the interposed spiral springs. The frames A and B are each composed of an outer frame, *a*, and cross-straps a^1 a^2, riveted at their ends to the said outer frame, all constructed of strap-metal. The outer frames *a* have round corners *b*, and the metal straps composing these frames are riveted together at the center of the sides and ends of the bed-bottom, as shown. These round corners allow a closer fit to be made between the bedstead and the bed-bottom, since they work clear of the corner stay-blocks found in most bedsteads. The interposed spiral springs C are secured at the intersections of the cross-straps a^1 a^2, in the manner shown in Fig. 1. At the sides and ends of the bed-bottom, between the upper and lower frames, are situated adjustable braces D D′. These braces are made of spring-metal, and connect diagonally the outer frames *a*, to which they are riveted, the bed-bottom being preferably provided with two of such braces on each side and one at each end thereof.

For cheapness and convenience in construction, the upper end of one brace and the lower end of the other brace on the sides are riveted at the center of the sides with the same rivets that secure together the straps composing the outer frames *a*. Each of the adjustable braces is constructed of two spring-straps, *c* c^1, Fig. 3, one of which has a slot, c^2, The two straps are secured together by a pin, *d*, which is rigidly attached to one strap, passes loosely through the slot in the other, and has a washer, *d′*, on its ends, thus allowing the two parts of the brace to play lengthwise upon each other the extent of the slot.

The two braces upon one side run diagonally in an opposite direction from those on the other side of the bed-bottom, the same being also the case with the braces at the ends of the bed-bottom, and these braces straining only one way in the direction of their length, it is necessary to have them thus arranged so as to prevent the upper frame rocking to any extent either sidewise or lengthwise, and at the same time to allow it a free vertical movement. The braces, by being adjustable, prevent the rocking of the upper frame, and, by sliding upon themselves when the bed-bottom is depressed, do not impede the vertical movement of such upper frame, and never become twisted or bent out of shape. These adjustable braces also allow the bed-bottom to be packed flat for transportation, with the upper and lower frames forced together, without injuring such braces.

Having thus fully described my bed-bottom and explained some of its advantages, what I claim as new therein, and desire to secure by Letters Patent, is—

1. In a bed-bottom, a brace composed of two

straps, c c^1, secured together by a slot and pin, and sliding upon each other, substantially as described and shown.

2. The bed-bottom described, consisting of the frames A B, having cross-straps and rounded corners, and the braces D D′, made in two parts, adapted to slide upon one another, and inclined in opposite directions from those on the other side or end of the bed-bottom, all constructed and arranged substantially as set forth and shown.

This specification signed and witnessed this 20th day of April, 1877.

ALFRED GORDON.

Witnesses:
JAS. M. WOOD,
GEORGE GORDON.