J. M. MASON.

PUNCHING MACHINE.

APPLICATION FILED APR. 6, 1914.

1,170,455.

Patented Feb. 1, 1916.

5 SHEETS—SHEET 1.

Fig. 1.

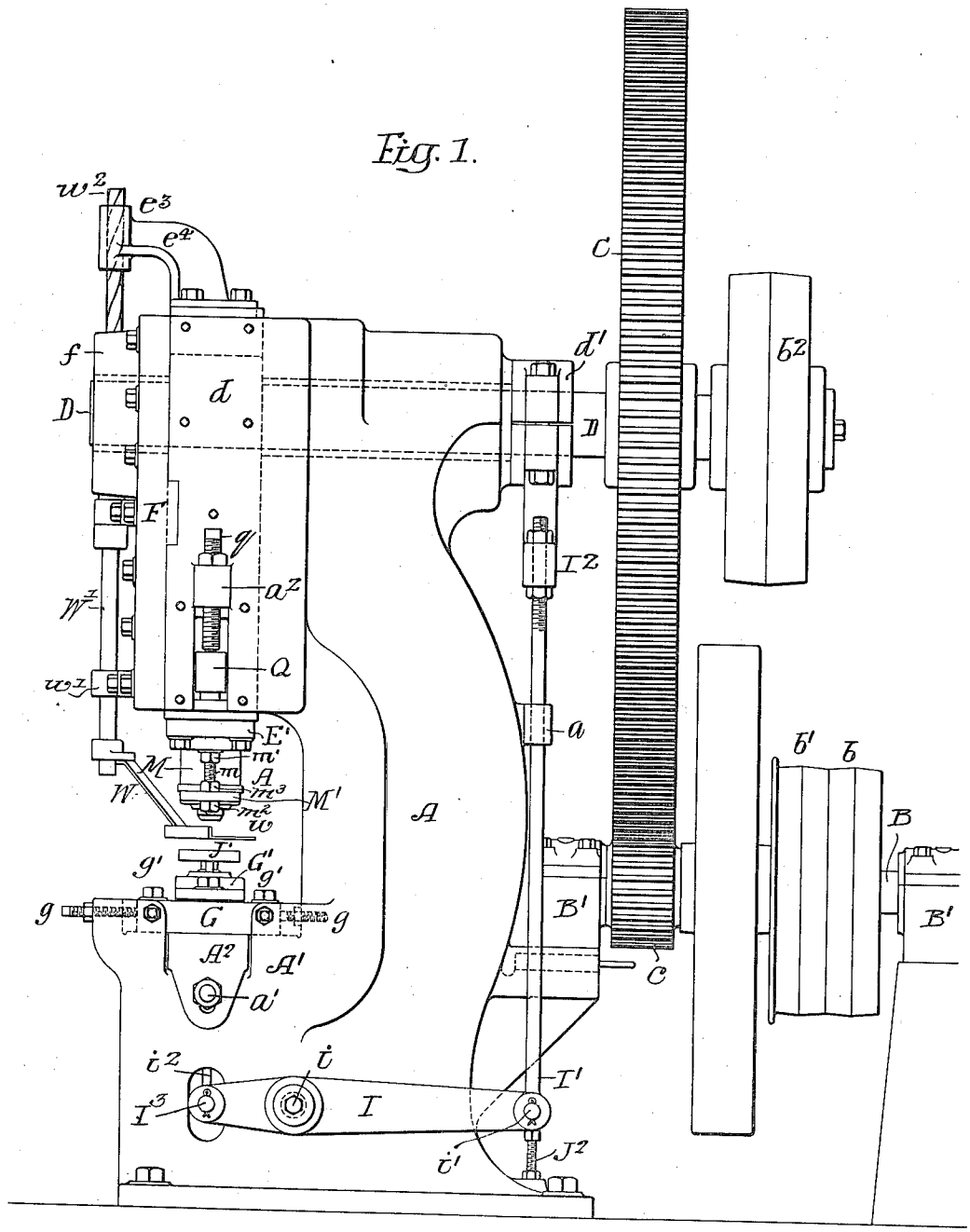

Witnesses—
Wills A. Brunones
Walter F. Pullinger

Inventor—
Joseph M. Mason.
by his Attorneys—
Howson & Howson

J. M. MASON.

PUNCHING MACHINE.

APPLICATION FILED APR. 6, 1914.

1,170,455.

Patented Feb. 1, 1916.

5 SHEETS—SHEET 2.

Fig. 2.

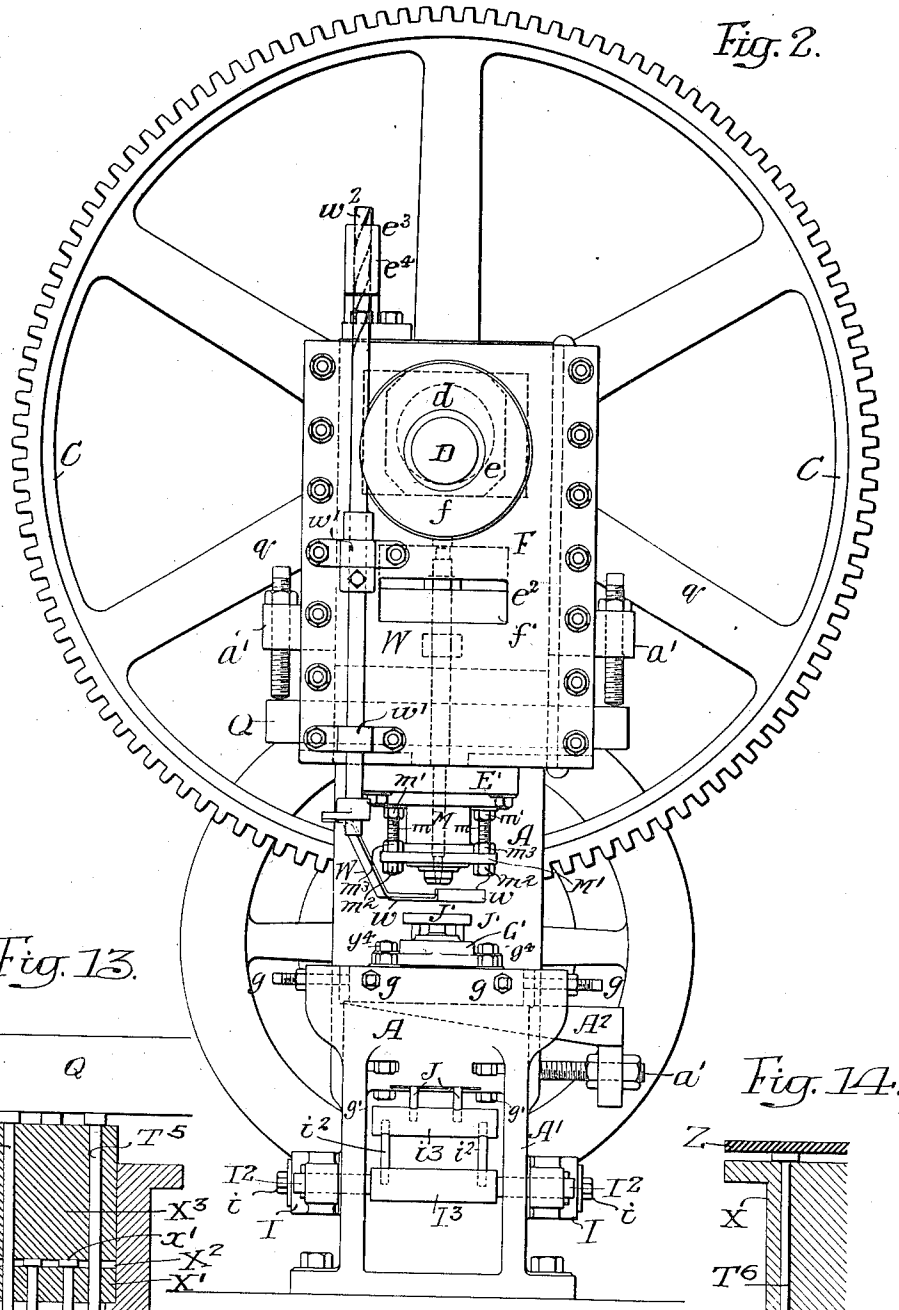

Fig. 13.

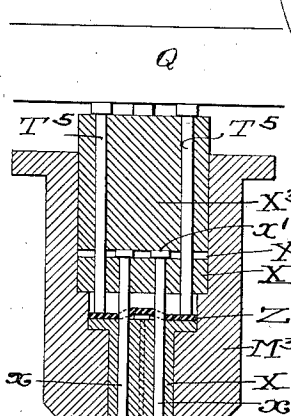

Fig. 14.

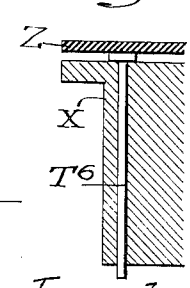

Witnesses.—
Willis Burrows
Walter F. Pullinger

Inventor.—
Joseph M. Mason.
by his Attorneys.—
Howson & Howson

J. M. MASON.

PUNCHING MACHINE.

APPLICATION FILED APR. 6, 1914.

1,170,455.

Patented Feb. 1, 1916.

5 SHEETS—SHEET 3.

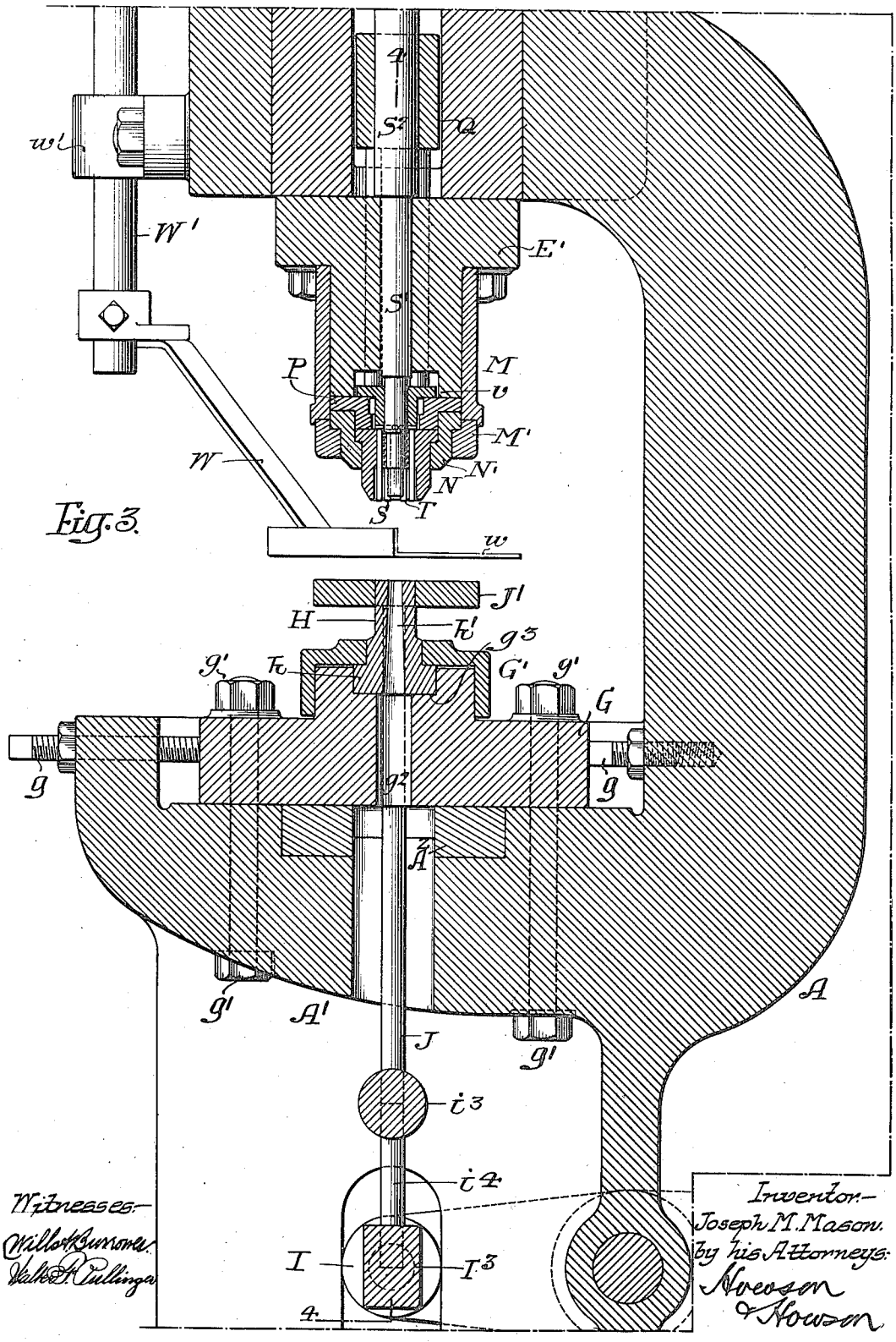

Fig. 3.

J. M. MASON.

PUNCHING MACHINE.

APPLICATION FILED APR. 6, 1914.

1,170,455.

Patented Feb. 1, 1916.

5 SHEETS—SHEET 4.

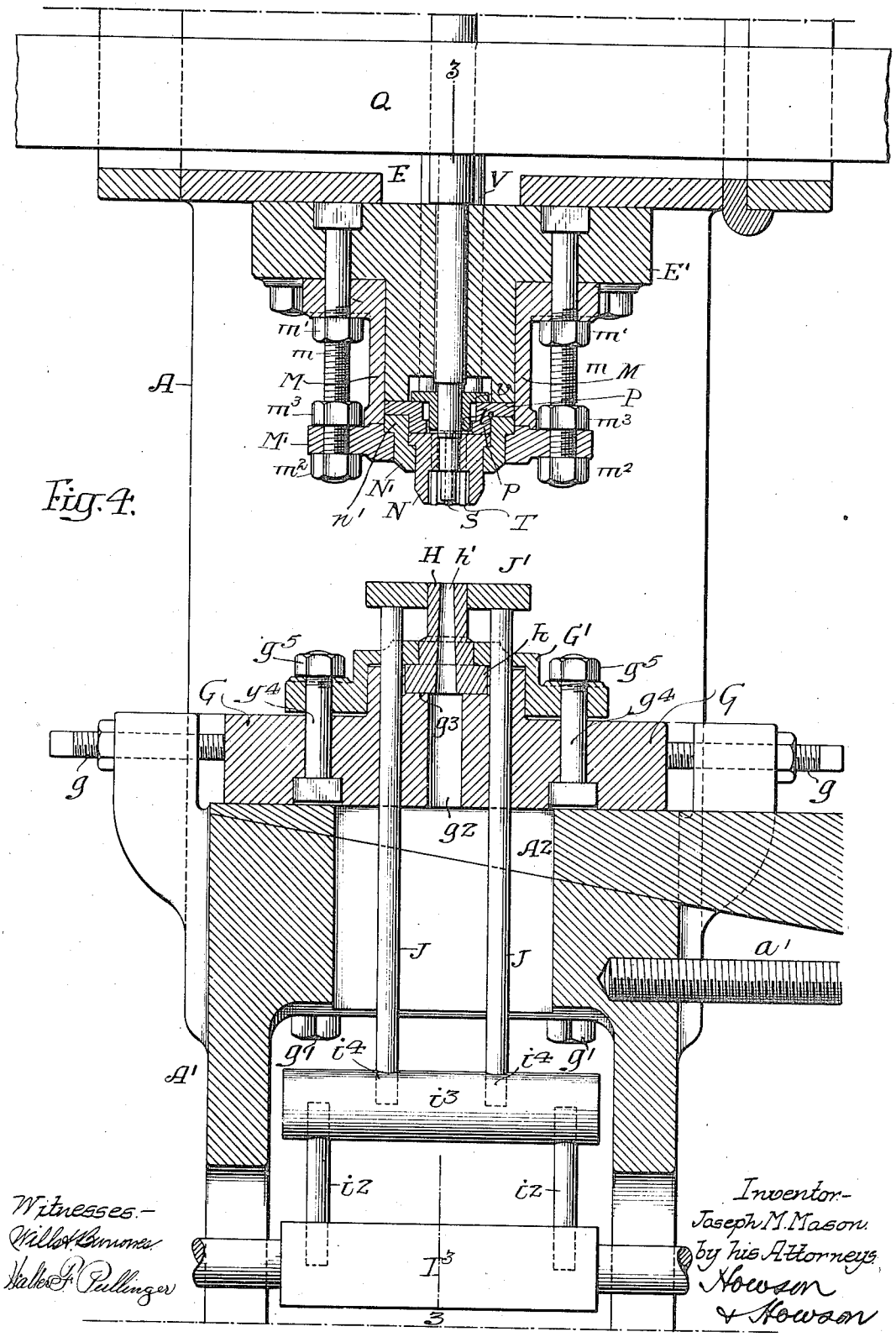

Fig. 4.

Witnesses.—
Willis A. Bunnes
Walter F. Pullinger

Inventor—
Joseph M. Mason.
by his Attorneys
Howson
& Howson

J. M. MASON.

PUNCHING MACHINE.

APPLICATION FILED APR. 6, 1914.

1,170,455.

Patented Feb. 1, 1916.

5 SHEETS—SHEET 5.

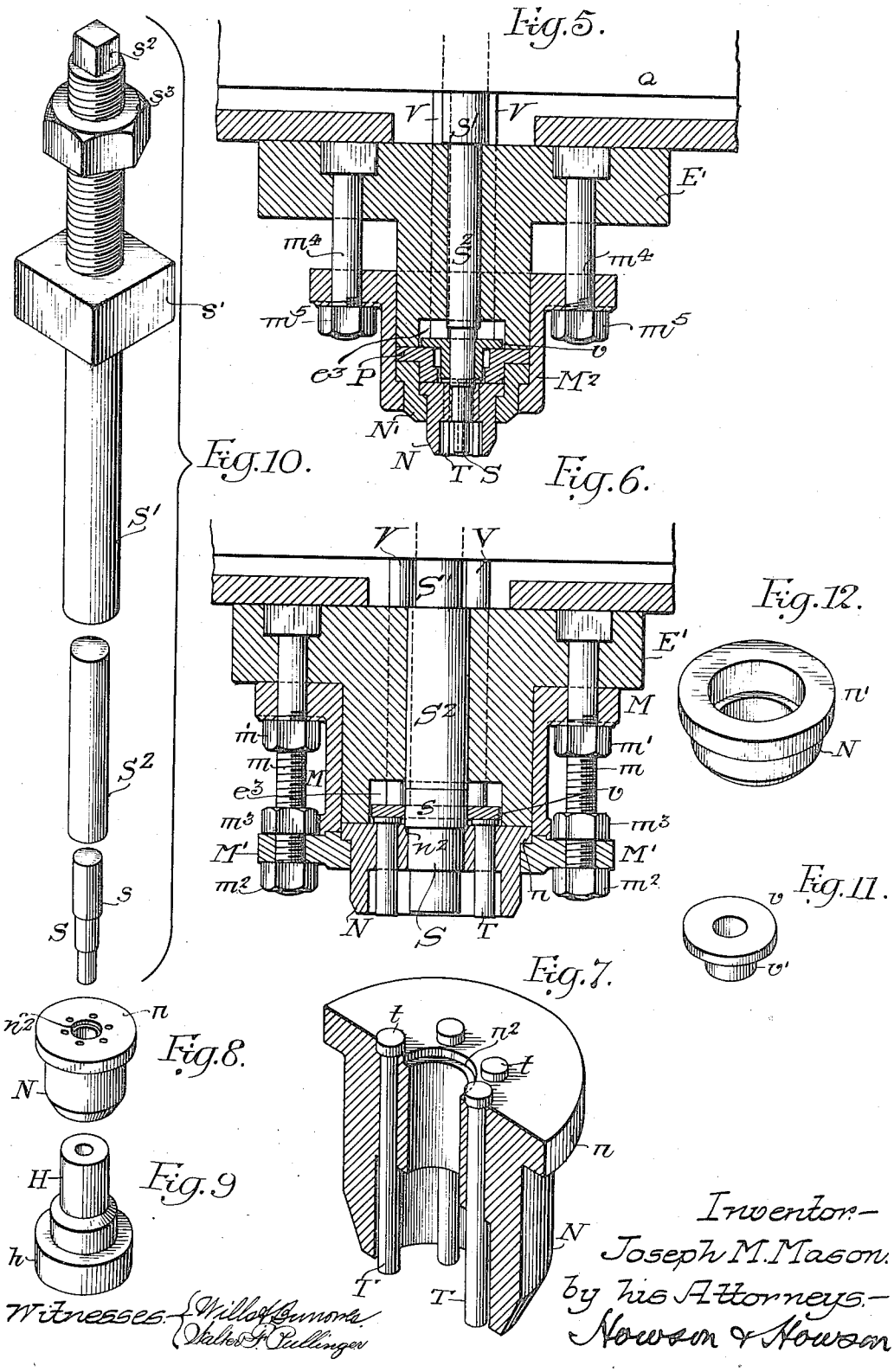

Witnesses. { Wills & Burrows. Walter F. Pullinger

Inventor.— Joseph M. Mason. by his Attorneys.— Howson & Howson

UNITED STATES PATENT OFFICE.

JOSEPH M. MASON, OF PHILADELPHIA, PENNSYLVANIA, ASSIGNOR OF ONE-HALF TO JOHN H. HILLS, OF PHILADELPHIA, PENNSYLVANIA.

PUNCHING-MACHINE.

1,170,455. Specification of Letters Patent. Patented Feb. 1, 1916.

Application filed April 6, 1914. Serial No. 829,971.

To all whom it may concern:

Be it known that I, JOSEPH M. MASON, a citizen of the United States, residing in Philadelphia, Pennsylvania, have invented certain Improvements in Punching-Machines, of which the following is a specification.

My invention relates to punching machines, and consists of certain improvements in punching machines of the character especially intended for punching washers by a single operation.

One object of my invention is to provide means for properly holding the upper and lower dies, and another object is to provide for the ready removal of the stripper rods.

My invention also relates to certain improvements in the upper dies and in the means for adjusting the several parts.

These and other features of my invention are more fully described hereinafter, reference being had to the accompanying drawings, in which:

Figure 1, is a side elevation of my improved washer punching machine; Fig. 2, is a front elevation of the same; Fig. 3, is an enlarged sectional view on the line 3—3, Fig. 4; Fig. 4, is an enlarged sectional view on the line 4—4, Fig. 3; Figs. 5 and 6, are views illustrating different constructions of the upper dies; Fig. 7, is a detached sectional perspective view of the upper die; Fig. 8, is a perspective view of the upper die; Fig. 9, is a perspective view of the lower die; Fig. 10, is a detached perspective view of the punch and the adjustable rod; Fig. 11, is a perspective view of the ejecting ring; Fig. 12, is a perspective view of the coupling ring, and Figs. 13 and 14, are sectional views illustrating another arrangement of the upper die construction.

The present machine is particularly adapted for punching washers in one operation. The upper and lower dies cut the washer from the blank, and the punch and lower die cut the hole in the washer. The metal from which the washers are to be punched is fed between the dies and the washers are removed from the punch by any suitable means. In the present instance, I have shown a reciprocating device for throwing the washers to one side and into any suitable receptacle.

A driving shaft is shown at B, on which are mounted fast and loose pulleys b, b', and such driving shaft is preferably mounted in vertically adjustable bearings B'. On the driving shaft is a pinion c meshing with a gear wheel C on a shaft D, and this shaft may be provided with a pulley b^2, if desired. When it is desired to drive the machine at high speed the pinion c is moved out of gear with the wheel C by adjusting the bearings B', and a driving belt is placed on the pulley b^2; the shaft B being used when low speed is desired. The shaft D is mounted in suitable bearings in the frame A and in a bearing f on the front plate F, and has an eccentric portion d adapted to a block e, shown by dotted lines, Fig. 1, which block is mounted on the reciprocating plunger E carrying the upper die and presser. I provide a table A', forming part of the frame A, and mounted on this table is a die carrier G, adjustable laterally on said table by means of set screws g and held in place after adjustment by bolts g'.

The die carrier has an opening g^2 extending through it, and this opening is enlarged to form a recess g^3 at the upper end for the reception of the base h of the lower die H. This die is held in its seat in the die carrier by means of a clamping ring G' which extends over the base and is secured to the die carrier by bolts g^4 having nuts g^5. Pivoted at i on each side of the frame A near its base are levers I. These levers are connected at the rear by a cross bar i', and are also connected by rods I' to a head I^2 actuated by an eccentric or cam d' on the shaft D; the rods I' sliding in guides a projecting from the frame A. The short arms of the lever I are connected to a cross bar I^3 from which project rods i^2 carrying a block i^3. The block i^3 has a pair of recesses i^4 for the lower ends of the rods J carrying the stripper plate J' which is apertured to fit snugly around the lower die H, and the rods J extend through the die carrier G and the clamp ring G'. At the rear of the base I provide an adjusting screw J^2 adapted to a threaded opening in said base, and this adjusting screw bears against the rod i' and limits the downward movement of the long arms of the levers I, and consequently the upward movement of the stripper plate J'. By adjusting this screw the stripper plate can be brought flush with the upper surface of the lower die. When it is wished to remove the rods J for any purpose, they are raised and

the block i^3 is turned outward on the bar I^3 as its pivot, so as to move the block away from the rods, when they can be lowered and removed from the under side of the die carrier, and they can be readily replaced in the same manner without the necessity of dismantling any portion of the upper dies.

Mounted on the table A′ and supporting the lower die holder in the present instance is a wedge block A^2, which can be adjusted by a set screw a' to raise or lower the die carrier and the lower die. The plunger E has a reciprocating movement toward and from the lower die, and the upper die carrier E′ is secured thereto. An upper die N is secured to the carrier E′ which has an opening of such a size as to allow the lower die to fit snugly therein; the two dies forming a gutter for the washer.

In Figs. 3 and 4 I have shown a small upper die mounted on a large carrier E′. In this instance I use the die ring N′ in which the flange of the upper die is seated, and a flange n' of this ring is in turn seated in a cap M clamped to the shell M′ and the carrier E′ by bolts m. Located between the ring N′ and the end of the die carrier E′ is a filler plate P having a flange p against which the upper end of the die N rests. This filler plate is of sufficient strength to withstand the pressure due to the cutting action of the die. The heads of the bolts m are mounted in the die carrier E′; nuts m' secure the shell M′ to the carrier; nuts m^2 secure the cap M in place, and nuts m^3 act as jam nuts to hold the cap rigid. There may be as many of these bolts m as desired.

The punch for punching the slug or center out of the washer is shown at S. The end of this punch fits an opening h' in the lower die and as this opening is tapered, flaring outwardly toward the bottom as illustrated in Figs. 3 and 4, the slug will free itself and pass through to the opening g^2 and be discharged. The punch S has a flange s which limits its downward movement, and this flange rests on a seat n^2 in the die N. The punch S is removable with the die from the die carrier and may be of different lengths, and in order to adjust the punch properly with respect to the lower die I provide an adjustable rod S′ which is carried by the plunger E. A nut s' fits snugly in a cavity in said plunger, so as to prevent it from turning, and the rod is screw threaded, the threaded portion being adapted to the nut, so that on turning the rod S′ it can be moved toward and from the punch. On the end of the rod is a head s^2 for the reception of a wrench for turning the rod, and a jam nut s^3 for locking the rod in the position to which it is adjusted. Access may be had to the head s^2 and the nut s^3 through an opening e^2 in the plunger and through an opening f' in the plate F. Mounted between the lower end of the rod S′ and the upper end of the punch in the present instance, is a rod S^2, but the rod S′ may be of such a length as to dispense with the section S^2.

In order to discharge the washer from the upper die I mount in said die a series of pins T, shown in Figs. 6 and 7; said rods having heads t. These pins are removable with the die and the number of pins may be varied. Permanently mounted in the die carrier are pins V, and between the pins V and the pins T is a disk v which adapted to a recess e^3 in the die carrier E′. The disk v in the constructions illustrated in Figs. 3, 4 and 5, has a depending flange v', shown more particularly in Fig. 11, as the distance between the ends of the pins V and the heads t of the pins T is greater than the thickness of the disk, but in the construction illustrated in Fig. 6, a plain disk is used.

The pins V contact with the under side of a bar Q mounted in the frame A and extending through a slot in the plunger E. The position of this bar Q is regulated by set screws q mounted in brackets a^2 projecting from the frame A, so that when the plunger with the die carrier is raised the rods V strike the bar Q holding the washer stationary through the medium of the disk v and pins T, while the die N is drawn away, allowing the washer to drop.

Any suitable means may be used for catching the washer and throwing it to one side of the machine. In the present instance I have shown a plate w mounted on the end of an arm W carried by a bar W′ mounted in bearings w' on the face plate F and the end of this bar is squared and twisted so as to form a spiral w^2, which passes through a nut e^3 carried by a bracket e^4 secured to the upper plunger, so that as said plunger is reciprocated the plate w will be moved into position to receive a washer, and on the return movement will be moved to one side, throwing the washer to one side of the machine in any suitable receptacle.

In Fig. 5, I have illustrated a die carrier of smaller size than that illustrated in Fig. 4, in which a small die is used, and instead of the flat cap M′ illustrated in Fig. 4, I use a deep flanged cap M^2 and plain bolts m^4 having nuts m^5 for securing the cap to the carrier E′, otherwise the parts are identical with the construction illustrated in Fig. 4.

In Fig. 6, I have shown a construction of die and die carrier for making large and heavy washers. In this instance the die N comes in direct contact with the die carrier E′ and the cap M′ holds the die into its seat. In this instance, as above remarked, the disk v mounted between the two sets of pins V and T is flat.

In Figs. 13 and 14, I have shown a modified arrangement of the upper die structure in which a plurality of punches are provided. In this instance, the punch head is indicated at M^3 and carries a punch guide X with punches x mounted therein; said guide being free to yield vertically during the punching operation and said punches having heads x' which rest on the top of a filler block X′ fitting a recess X^2 in the punch carrying head. Resting on top of the punch heads is a block X^3, and passing through this block and the filler block are pins T^5 having heads arranged to be engaged by the block Q. Preferably, I provide cushioning means as shown at Z between the lower ends of these pins T^5 and the punch guide, and said punch guide additionally carries displacing pins T^6 which are held down lightly by the said cushioning means Z which is free to yield under pressure when the punch is cutting; such cushioning means being sufficient after the cutting operation has been completed to cause said pins T^6 to lower and press the article under operation away from the punch carrier should there be danger of air suction holding the same thereto.

The operation is as follows: The dies for a particular size washer are placed in their respective holders. If a large die is used, then it is assembled as illustrated in Fig. 6; if a small die is used with a large carrier, then the construction illustrated in Fig. 4 is used, and if a small die with a small carrier is used, I preferably use the construction illustrated in Fig. 5.

The plate from which the washers are punched is passed through the space between the upper and lower dies and as a reciprocating motion is imparted to the upper die it punches a washer from the blank and the center punch S forms the hole in the washer. The washer passes into the upper die while the plug punched out of the washer passes through the tapered opening in the lower die. As the upper die punches the strip from which the washers are formed, it forces said strip below the edge of the lower die on to the stripper J′, and on the vertical movement of the stripper it returns the strip to position in line with the upper surface of the lower die, when the strip can be fed or moved into position to be punched again. The pins T, as the upper die is raised, force the washer from the upper die and the washer drops onto the plate w and is thrown to one side of the machine in the manner described.

By the above construction it will be seen that the machine can be readily changed to punch washers of any size desired, and that the dies can be kept in proper cutting order and the upper die group, consisting of the upper die, pins and punch, can be quickly removed from or mounted on the die carrier E′.

When it is wished to remove the rods J carrying the stripper plate, it is only necessary to lift the rods, turn the block I^3 out and withdraw the rods from the under side of the lower die carrier as before described, obviating the necessity of dismantling the upper die.

While I have described certain constructions as embodying the features of my invention, it will be understood that I do not wish to be limited to the precise constructions shown and described, and the claims are intended to cover such constructions as well as mechanical equivalents capable of carrying out the object and purpose of my invention.

I claim:

1. The combination, in a washer punching machine, of a frame, upper and lower dies carried by said frame; the latter being apertured below the lower die, a shaft, a cam on the shaft, rods moved by the cam, levers connected to the rods, a block carried by the levers and internally disposed with respect to the frame, said block having sockets, and stripper rods mounted in said sockets and disposed in the aperture of the frame, said stripper rods being guided at their upper ends and carrying a stripper plate.

2. The combination, in a punching machine, of a frame, upper and lower dies, a carrier for the lower dies, lever mechanism, a block pivotally mounted on said lever mechanism and having sockets, stripper rods adapted to bearings in the lower die carrier and having their lower ends mounted in the sockets, a stripper plate carried by the upper ends of the rods and encircling the lower die, so that on raising the stripper rods they can be lifted out of their sockets in the block and on turning the block the rods can be withdrawn on the downward movement.

3. The combination of a frame, a lower die holder having a socket, a die having an enlarged base adapted to the socket, a clamp extending over the base, means for securing the clamp to the die holder, an upper die, and means for reciprocating the said upper die.

4. The combination, in a washer punching machine, of a frame, upper and lower dies, a shaft, a cam on the shaft, cam rods, two levers one on each side of the frame, a stripper connected to the levers, a cross bar connecting the levers at the rear, and an adjustable set screw at the back of the frame for limiting the movement of the levers.

5. The combination of a frame, a lower die holder having an opening, said opening being enlarged at the upper end and forming a socket, a lower die having an enlarged

base flange fitting said socket, a flanged clamping ring extending over the base flange of the lower die and secured to the carrier therefor, an upper die, and means for reciprocating the upper die with respect to the lower die.

6. The combination, in a washer punching machine, of a frame, a lower die, a plunger, an upper die carried by the plunger, means for reciprocating the plunger, ejector pins movable in the upper die, a second set of pins in the die carrier, and a disk mounted between the two sets of pins and forming an operative connection whereby the movement of one set of pins may react upon the other.

7. The combination, in a washer punching machine, of a frame, a lower die, a plunger, an upper die carried by the plunger, means for reciprocating the plunger, ejector pins movable in the upper die, a second set of pins in the die carrier, a disk mounted between the two sets of pins and forming an operative connection whereby the movement of one set of pins may react upon the other, and a block extending through the plunger against which the pins strike in their upward movement, so as to force the finished washer out of the upper die.

8. The combination, in a washer punching machine, of a frame, a lower die, a plunger, means for reciprocating the plunger, a die carrier secured to the plunger, a shell fitting the die carrier, an upper die having an enlargement, a cap fitted to the shell and extending over the enlargement and holding the die to the die carrier, bolts securing the cap and shell to the die carrier and means for holding the shell to the die carrier independently of the upper die.

9. The combination, in a washer punching machine, of a frame, a lower die, a plunger, means for reciprocating the plunger, a die carrier secured to the plunger, a shell fitting the die carrier, an upper die having an enlargement, a cap fitted to the shell and extending over the enlargement and serving to hold the die to the carrier, bolts securing the cap and shell to the die carrier, and sets of nuts on said bolts; one set securing the shell to the die carrier and another set securing the die retaining cap to the die carrier independently of the shell.

10. The combination of the frame, of a lower die, a plunger, means for reciprocating the plunger, a die carrier secured to the plunger and having a central extension, a die having an enlargement forming a base flange, a shell, a cap mounted on the shell and extending over the flange of the die, a recess in the die carrier, a disk mounted in the recess, pins extending through the die and in contact with the disk, pins extending through the die carrier and resting on the disk, said disk forming an operative connection between the two sets of pins whereby the movement of one set may react upon the other, and a block in the frame against which the pins strike when the plunger and die are raised.

11. The combination, in a machine for punching washers, of a frame, a plunger vertically movable in the upper part of the same, means for reciprocating the plunger, a die carrier secured to the plunger, a die having an enlarged base flange mounted in said carrier, a flanged ring mounted on the die carrier and recessed to receive said base flange, an annular clamp overlying and engaging the flange of said ring, means for securing said clamp to the die carrier whereby the ring and die will be secured in place, and a fixed lower die with which said first-named die coacts.

12. The combination, in a machine for punching washers, of a frame, a plunger vertically movable in the upper part of the same, means for reciprocating the plunger, a die carrier secured thereto, an upper die having an enlarged base flange mounted in said carrier, means for securing said die in place, a punch extending through said die and movable with respect to the same, an adjustable rod axially mounted with respect to the plunger and in line with said punch, and a lower die with which said upper die coacts.

13. The combination, in a machine for punching washers, of a frame, a fixed lower die carried by the same, a plunger vertically movable in the upper part of said frame, a die carrier secured thereto, a flanged upper die mounted in said carrier, a punch axially mounted with respect to said die, a flanged cap for engaging the flange of the die, means for securing said cap to the die carrier, a rod axially mounted with respect to the plunger and punch, said rod being screw-threaded at its upper end, and a nut confined to the plunger through which the threaded end of the rod passes, said rod being adjustable therein to form a proper bearing for the punch.

14. In a washer punching machine, the combination of a frame, a fixed lower die carried thereby having a central opening, a reciprocating plunger mounted in the frame above the lower die, a die carrier secured to the plunger, an upper die mounted in said carrier, a punch axially mounted in said die, an adjustable rod carried by the plunger and axially mounted therein in line with said punch, a series of headed ejecting pins carried by the upper die and surrounding the punch, a series of pins mounted in the die carrier surrounding the rod, and a disk located between the two sets of pins, said disk forming an operative connection whereby the movement of one set of pins may react upon the other.

15. In a washer punching machine, the combination of a frame, a fixed lower die having a central opening, a reciprocating plunger mounted in the frame above the lower die, a die carrier secured to the plunger, a flanged upper die mounted in said carrier, an apertured cap overlying the flange of said die, a shell for centering said die, bolts for securing said shell and the die-retaining cap to the carrier, a punch mounted in said upper die, an adjustable rod axially mounted in line with said punch and carried by the plunger, a series of ejecting pins carried by the upper die and surrounding the punch, a series of pins mounted in the die carrier surrounding the rod, and a disk located between the two sets of pins, said disk forming an operative connection whereby the movement of one set of pins may react upon the other.

16. The combination, in a washer punching machine, of a frame, a fixed lower die, a reciprocating plunger, a die carrier secured thereto, and recessed, a shell surrounding the die carrier, a flanged die, a cap through which the body portion of the die extends, means for securing the cap and the shell to the die carrier, an internally and externally flanged ring located between the die and the die carrier, a centrally arranged punch, a series of ejector pins mounted in the die, a series of pins mounted in the die carrier and a disk mounted in the recess of the die carrier and located between the two sets of pins.

17. The combination, in a machine for punching washers, of a frame having a table, a lower die carrier mounted on the table, a hollow lower die having an enlarged base, a clamp ring extending over the base and securing the die to the die carrier, a shaft, a plunger mounted in the upper portion of the frame, an upper die carrier secured to the plunger, an upper die having an enlarged base resting against the die carrier, a shell, a cap, said cap extending over the base of the upper die and securing it to the die carrier, a punch for punching the hole in the washer, a series of pins in the upper die, a series of pins in the die carrier, a disk between the two, a block against which the pins strike when the plunger is raised, stripper rods extending through the lower die, a stripper carried by the stripper rods and surrounding the lower die, and means whereby the stripper rods can be detached from the operating mechanism and removed from the under side of the die carrier.

18. The combination, in a washer punching machine, of a frame, upper and lower dies carried by said frame; the latter being apertured below the lower die, a shaft, a cam on the shaft, rods moved by the cam, levers connected to the rods outside the frame, a block carried by the levers inside the frame, said block having sockets, stripper rods mounted in said sockets and disposed in the aperture of the frame, a carrier for the lower die; the upper ends of said stripper rods passing through said carrier and being guided thereby, and a stripper plate carried by said stripper rods.

In testimony whereof, I have signed my name to this specification, in the presence of two subscribing witnesses.

JOS. M. MASON.

Witnesses:
MURRAY C. BOYER,
WM. A. BARR.

Copies of this patent may be obtained for five cents each, by addressing the "Commissioner of Patents, Washington, D. C."