No. 650,923. Patented June 5, 1900.

J. W. BOYNTON.

ADJUSTABLE REAMER.

(Application filed June 23, 1899.)

(No Model.)

Fig. 1.

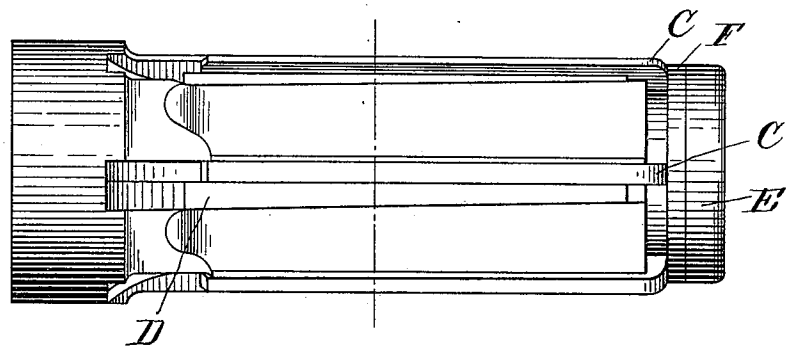

Fig. 2.

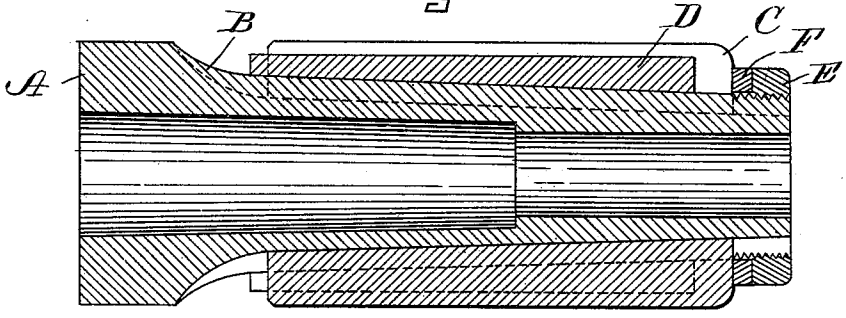

Fig. 3.

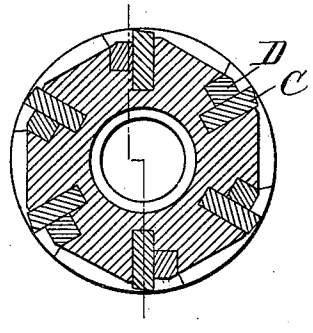

WITNESSES.

A. D. Grover.

Fred E. Dorr.

INVENTOR.

John W. Boynton
by Alex P. Browne,
attorney.

THE NORRIS PETERS CO., PHOTO-LITHO., WASHINGTON, D. C.

UNITED STATES PATENT OFFICE.

JOHN W. BOYNTON, OF NEW BEDFORD, MASSACHUSETTS, ASSIGNOR TO THE MORSE TWIST DRILL AND MACHINE COMPANY, OF SAME PLACE.

ADJUSTABLE REAMER.

SPECIFICATION forming part of Letters Patent No. 650,923, dated June 5, 1900.

Application filed June 23, 1899. Serial No. 721,557. (No model.)

To all whom it may concern:

Be it known that I, JOHN W. BOYNTON, a citizen of the United States, residing at New Bedford, in the county of Bristol and State of Massachusetts, have invented certain new and useful Improvements in Adjustable Reamers, of which the following is a specification.

My invention relates to improvements in adjustable reamers; and its object is to improve the construction of such devices in a manner which will be hereinafter more fully pointed out.

In the accompanying drawings I have represented at Figure 1 a side elevation of a device embodying my present improvement, and at Figs. 2 and 3, respectively, longitudinal transverse sections thereof.

In the drawings, A represents the reamer-body. This reamer is grooved, as at B, these grooves having a tapering or wedge-formed bottom and of a depth sufficient to receive the adjustable cutting-blade C, the base of which is tapered to correspond to the taper of the slot and also the locking-wedge D, all as shown in Fig. 2. The face of this locking-wedge next to the face of the blade is parallel to the face of the blade; but the opposite face is inclined to correspond to an incline in the wall of the slot against which it abuts, all as shown in Fig. 1. At the end of the reamer-body is mounted an adjusting-nut E, between which and the ends of the blades there is preferably inserted a washer F. When it is desired to vary or regulate the diameter of the reamer, the locking-wedges are loosened, which by reason of their accessible location can be readily accomplished. The blades may then be moved by means of the nut or otherwise over the inclined bottom of the grooves in which they rest until the desired diameter of the tool is obtained, and then the locking-wedges are driven home, the nut bearing against the ends of the blades and holding them in position.

It will be observed that the construction hereinbefore described possesses the advantages of simplicity, fewness of parts, accessibility, and readiness of adjustment, and, finally, great rigidity of the structure after adjustment.

I claim—

1. An adjustable reamer comprising in combination a hub provided with one or more cutter-receiving grooves, each inclined radially along the axis of the hub, a cutter for each groove having its bottom edge inclined to correspond with the same, a stop or abutment on one end of said hub adapted to determine the longitudinal position of said cutter or cutters in their respective grooves, and a locking wedge for each of said cutters, fitted between one side thereof and an opposing wall or face formed on said hub, said wedge being tapered toward said stop or abutment, for the purpose set forth.

2. An adjustable reamer comprising in combination a hub provided with one or more cutter-receiving grooves, each inclined radially along the axis of the hub, a cutter for each groove having its bottom edge inclined to correspond with the same, a nut threaded on one end of said hub and forming an adjustable stop, whereby said cutters may be adjusted and their longitudinal position determined, and a locking-wedge for each of said cutters, fitted between one side thereof and an opposing wall or face formed on said hub, said wedge being tapered toward said stop or abutment, for the purpose set forth.

In testimony whereof I have hereunto subscribed my name this 27th day of May, 1899.

JOHN W. BOYNTON.

Witnesses:
E. D. CHADWICK,
E. B. TOMLINSON.