D. MORGAN.

GRAIN VALVE.

APPLICATION FILED MAR. 23, 1916.

1,195,838.

Patented Aug. 22, 1916.

Fig. 1.

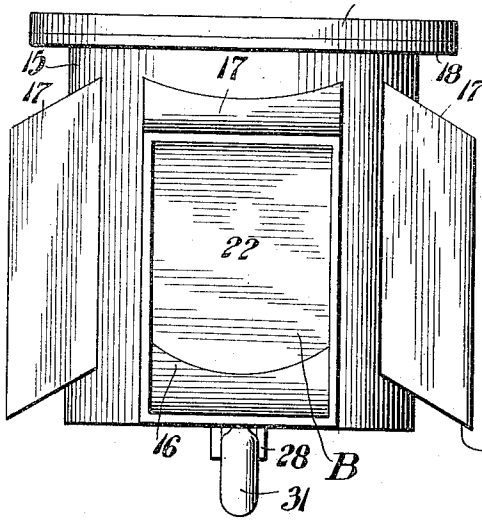

Fig. 3.

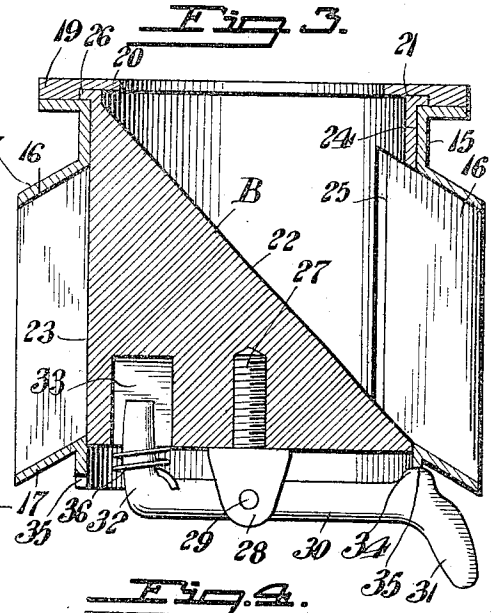

Fig. 2.

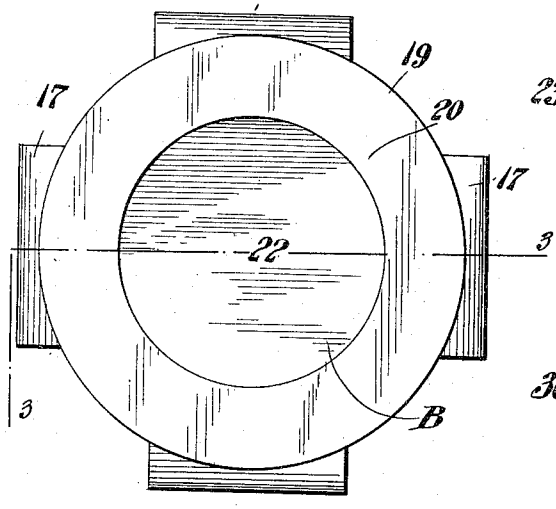

Fig. 4.

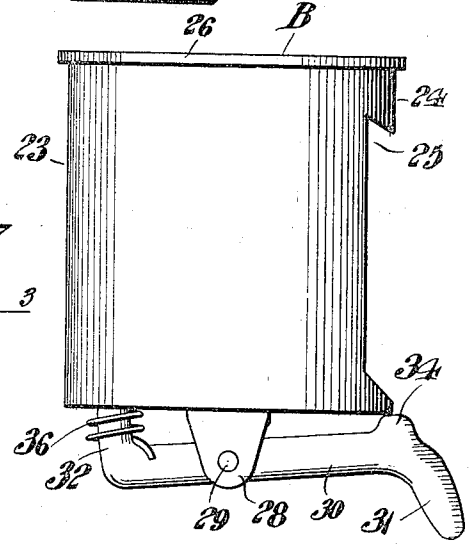

Witnesses

John D. Spalding

Wm. E. Bagger

Inventor

Daniel Morgan

By Victor J. Evans

Attorney

THE NORRIS PETERS CO., PHOTO-LITHO., WASHINGTON, D. C.

UNITED STATES PATENT OFFICE.

DANIEL MORGAN, OF SEYMOUR, INDIANA.

GRAIN-VALVE.

1,195,838. Specification of Letters Patent. Patented Aug. 22, 1916.

Application filed March 23, 1916. Serial No. 86,291.

To all whom it may concern:

Be it known that I, DANIEL MORGAN, a citizen of the United States, residing at Seymour, in the county of Jackson and State of Indiana, have invented new and useful Improvements in Grain-Valves, of which the following is a specification.

This invention relates to valves for controlling the flow of grain in elevators, mills and the like from a source of supply to various receiving bins, and the invention has for its object to produce a simple and improved valve communicating at all times with the source of supply and capable of being easily and quickly adjusted so as to properly direct the flow through any one of a plurality of outlets.

A further object of the invention is to produce a valve which is easily accessible and which may be properly adjusted at any time whether the grain is flowing or not.

A further object of the invention is to produce a simple and improved valve having an operating lever which also constitutes a locking device for securing the valve in adjusted position, said lever constituting also an indicator whereby the direction of the flow will be shown to the operator.

With these and other ends in view which will readily appear as the nature of the invention is better understood, the same consists in the improved construction and novel arrangement and combination of parts which will he hereinafter fully described and particularly pointed out in the claim.

In the accompanying drawing has been illustrated a simple and preferred form of the invention, it being, however, understood that no limitation is necessarily made to the precise structural details therein exhibited, but that changes, alterations and modifications within the scope of the claims may be resorted to when desired.

In the drawing,—Figure 1 is a view ir side elevation of a valve constructed in accordance with the invention. Fig. 2 is a top plan view. Fig. 3 is a vertical sectional view taken on the line 3—3 in Fig. 2. Fig. 4 is a detail view in side elevation of the valve core detached from the casing.

Corresponding parts in the several figures are denoted by like characters of reference.

The valve casing 15 which consists mainly of a cylindrical shell is provided with a plurality of outlets 16 surrounded by downwardly inclined flanges 17 with which chutes or ducts of any convenient nature may be connected. The cylindrical casing 15 is provided at its upper edge with a horizontal annular flange 18 with which is connected a collar 19 having an inwardly extending annular flange 20 between which and the flange 18 is produced an annular groove 21.

The core or body portion B which is supported for axial rotation in the cylindrical casing or shell 15 consists of a solid body having an obliquely disposed inclined face 22 and arcuate side walls 23 corresponding with the contour of the cylindrical casing, said side walls being formed in part by a shell 24 having an opening 25 corresponding in shape and area with any one of the outlets 16, said core being also provided at the upper edge thereof with an annular flange 26 accommodated in the annular groove 21 formed between the flange 18 of the shell or casing and the flange 20 of the collar 19. It will be seen that when the parts are assembled, the core will be suspended vertically within the shell or casing in such a manner that it may be freely rotated for the purpose of placing the opening 25 in registry with any one of the outlets 16. Fixed in the lower end portion of the solid body of the core is a screw 27 having a bifurcated head 28 provided with a transverse pin 29 on which is fulcrumed a lever 30 having a downwardly extending handle 31 and an arm 32 that extends upwardly into a recess 33 in the solid body portion of the core. The lever 30 is provided with a lug 34 adapted to engage any one of a plurality of notches 35 in the lower end of the shell or casing 15, a spring 36 coiled about the arm 32 being provided to retain the lever in adjusted or locked position. The handle 31 of the lever points in the direction of the outlet with which the opening 25 of the core is in registry at any one time.

It will be readily seen that by disengaging the lug 34 of the locking lever from the notch 35 of the casing with which it is at any time engaged, the core may by means of the lever be turned about its axis, thereby enabling the opening 25 to be placed in registry with any desired outlet 16 where it may be secured by releasing the lever which will then by the tension of the spring 36 be placed in locking engagement with the notch 35 corresponding to the outlet with which the opening of the core has been placed in registry.

The core, it will be seen, is of solid construction and will be but slightly affected by constant use. The entire device is simple, easily installed and thoroughly useful for the purposes for which it is provided.

Having thus described the invention, what is claimed as new, is:—

In a device of the class described, a cylindrical valve casing having radial outlets and provided at its upper edge with an outwardly extending annular flange, a collar connected with said flange and having an inwardly extending flange coöperating therewith to form an annular groove, a valve core consisting of a solid body having an inclined side face and arcuate side walls, said core being also provided with an arcuate shell having an opening adapted to register with the outlets of the valve casing, said core being provided at its upper edge with an annular flange engaging the groove formed between the flanges of the valve casing and the collar, and means connected with the valve core for rotating the same about its axis and for securing it at various adjustments, said means including a spring actuated lever pivotally connected with the solid portion of the valve core and having a downwardly extending handle and an upwardly extending lug, the valve casing being provided at its lower edge with notches for engagement with said lug.

In testimony whereof I affix my signature in presence of two witnesses.

DANIEL MORGAN.

Witnesses:
GEO. PETER,
JNO. M. LEWIS.

Copies of this patent may be obtained for five cents each, by addressing the "Commissioner of Patents, Washington, D. C."