Sept. 15, 1931. N. M. VANDEGRIFT 1,823,517

TOP FOR REFRIGERATOR CABINETS

Filed June 15, 1929

Fig. 1.

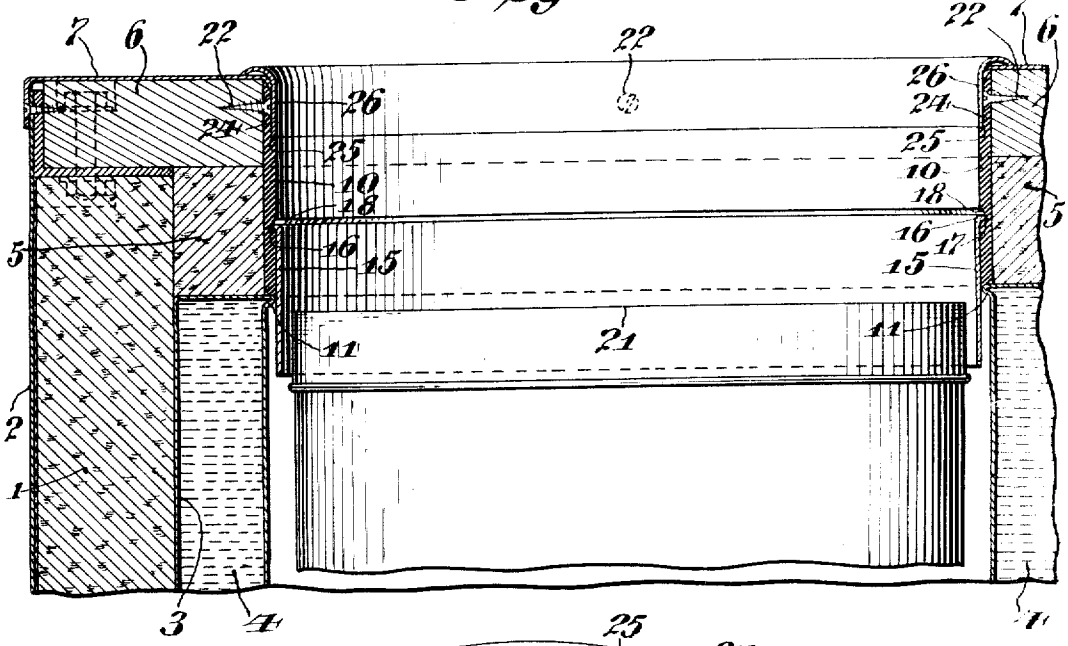

Fig. 2.

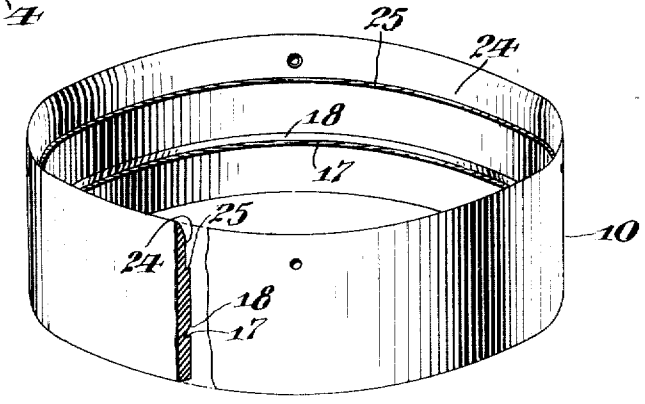

Fig. 3.

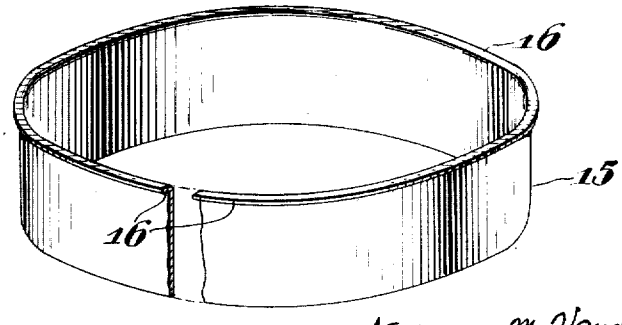

Inventor

Nelson M. Vandegrift

By Cyrus N. Anderson

Attorney

Patented Sept. 15, 1931 1,823,517

UNITED STATES PATENT OFFICE

NELSON MARTIN VANDEGRIFT, OF PHILADELPHIA, PENNSYLVANIA, ASSIGNOR TO SHEIP & VANDEGRIFT, INC., OF PHILADELPHIA, PENNSYLVANIA, A CORPORATION OF PENNSYLVANIA

TOP FOR REFRIGERATOR CABINETS

Application filed June 15, 1929. Serial No. 371,117.

My invention relates to tops for refrigerator cabinets, more particularly to the linings for the openings of such tops through which the objects, such as ice cream cans, to be refrigerated or kept cool are inserted.

The general object of the invention is to provide a top having means of novel construction for cooperating more efficiently with the adjoining surrounding wall portion at the upper end of a chamber of the cabinet within which objects are to be placed and kept for refrigeration than heretofore has been the case.

It also is an object of the invention to provide a top having a lining or bushing for an opening therein comprising a flexible ring member with which is detachably connected a metal ring of integral structure the lower end portion of which constitutes an extension of the said lining or bushing.

A further object of the invention is to provide a top, comprising means in association with a lining or bushing, which cooperates with the adjoining portion of the surrounding wall of the upper end of a chamber in the cabinet to prevent the formation of an annular chamber surrounding a portion of the said lining or bushing when the top is in place upon the cabinet.

It is a further object of my invention to provide means for protecting the lower end of the lining for the opening in the top of a refrigerator cabinet against damage from the rough usage to which such linings are subjected when containers are placed in the cabinet or removed therefrom, without destroying the insulating effect intended to be secured by these linings.

To the foregoing and other ends the invention comprehends the construction as hereinafter described in detail, particularly pointed out in the claims, and as illustrated in the drawing wherein I have illustrated one embodiment of the invention in the form at present preferred by me.

It will be understood that various changes in the details of construction may be made within the scope of the claims without departing from the invention or the principle thereof.

In the drawings:

Fig. 1 is a view in vertical central section of a fragmentary portion of a refrigerator cabinet illustrating an embodiment of the invention;

Fig. 2 is a view of the upper portion of the bushing or lining which consists of flexible material; and

Fig. 3 is a similar view of the lower portion of the said lining consisting of a suitable rustless metal ring.

In the drawings I have shown the upper part of a fragmentary portion of a refrigerator cabinet the outer heat-insulating wall 1 of which consists of cork or other suitable heat-insulating material. The cork is located between an outer metal wall 2 and the outer wall 3 of a double-walled receptacle 4 which is adapted to contain brine or other refrigerating agent. The upper end of the refrigerant receptacle terminates a considerable distance below the upper end of the cork 1, leaving an annular space in the wall of the cabinet which is occupied and filled by cork or other heat-insulating material 5 which preferably is secured to and constitutes a part of the top, the upper portion of which comprises wood 6 or other suitable material. The top is covered and protected by a metal plate 7 which preferably is rustless.

Not only is the top as a whole removable but the cover plate 7 may be and in practice should be removable from the main body portion 6 of the top.

The bushing or lining comprises a flexible ring member 10 which may consist of vulcanized rubber or other suitable heat insulating material the width of which preferably should be equal to the combined thickness of the portions 5 and 6 so that the lower edge

thereof will terminate against or in proximity to the upper inner edge of the refrigerant receptacle. The inner upper edge or corner of the said receptacle is provided with an inwardly extending or projecting beadlike portion 11 with which the lower edge of the flexible ring member 10 may be in contact, as shown. Such contactual relation is preferred, but the lower edge of the said ring may be spaced from the said bead without departing from the principle and spirit of the invention. It will be observed that the space between the flexible ring member 10 and the opposite portion of the cork wall 1 is occupied by the annular filling of cork or similar heat-insulating material 5, so that no annular unfilled space is permitted to exist in the structure.

For the purpose of protecting the lower end portion of the flexible member 10 from being damaged by the insertion of ice cream or other receptacles into the cabinet and by their removal therefrom I have provided the lower end of the flexible member with a metal ring 15 which preferably is rustless. The said ring is of integral structure and is provided at its upper edge with an outwardly turned narrow flange, as indicated at 16, which engages with and rests upon the lower preferably horizontal or square edge or side 17 of a notch 18 provided upon the inner side of the flexible member 10 and extending entirely around the same, as indicated. The metal ring 15 is sufficiently flexible to permit distortion thereof to facilitate its insertion into the ring 10 and to effect engagement of the flange 16 with the notch 18. The lower edge of the notch constitutes in effect a shoulder upon which the flange 16 rests. Likewise the ring 10 of flexible material, as rubber, may be distorted if desired for the purpose of facilitating the uniting or separation of the two members 10 and 15. The lower portion of the ring 15 projects a considerable distance below the lower edge of the ring 10, as shown, so as to overlie and protect the joint between the lower edge of the ring 10 and the lower side of the filling 5 and the upper end of the refrigerant-containing receptacle. The presence of the ring 15 which extends or projects beyond the joint between the lower edge of the flexible ring 10 and the upper inner edge portion of the refrigerant receptacle operates to protect the lower edge of the said flexible ring and the bead 11 to prevent injury thereto by the contact or collision therewith of objects, such as ice cream cans, upon the insertion of the same into and their removal from the refrigerating chamber. The upper portion of an ice cream can 21 is illustrated in the drawing and it will be noted that its upper end terminates within the lower portion of the ring 15 in a plane below the plane of the refrigerant indicated in the refrigerant receptacle 4.

The lining, comprising the parts 10 and 15 is inserted into the opening through the top and may be secured in position therein by means of screws 22 (only two of which are shown) which penetrate the material 6 of the top, after which the cover plate 7 is placed in position with the narrow flange thereon extending into the opening through the top and overlying the upper edge portion of the flexible ring member 10 of the lining or bushing as shown in Fig. 1. The inner side of the upper portion of the ring 10 is cut away or rabbeted as indicated at 24. The presence of such cut-away portion provides a shoulder 25 with which the lower edge of a metal protecting ring 26 contacts. The presence of the said cut-away portion 24 permits the employment of a ring 26 having an internal diameter equal to the internal diameter of the portion of the ring 10 below the cut-away portion 24, thereby forming a smooth and even surface upon the upper inner edge portion of the said ring 10. The upper portion of the ring 26 is curved outwardly, with its outer edge portion overlying the inner edge portion of the cover plate 7, as is clearly shown in Fig. 1 of the drawing.

I have found that a flexible rubber ring provides a structure which is sufficiently durable to remain in use for a long period of time, and at the same time provides the necessary insulation between the refrigerant chamber and the outside of the cabinet. In my construction it will also be observed that the metal protecting ring 15 is spaced a substantial distance from the upper edge of the insulating ring 10, and is likewise spaced a substantial distance from the protecting ring 26, thereby providing a structure in which the insulating effect of the ring 10 is preserved at the same time this ring is protected from damage by the insertion of ice cream cans into the opening in the cabinet and by their removal therefrom.

A lining or bushing embodying my invention may be readily removed as a whole from the opening within the top, and when it is removed the parts 10 and 15 may be separated readily and either the one or the other replaced by a new part should such replacement become desirable or necessary; or if the lining as a whole shall have become injured in one way or another so as to destroy its usefulness, then it may be removed without difficulty and discarded or destroyed and an entirely new lining or bushing substituted therefor.

By the employment of the invention I am enabled to provide a structure substantially free from pockets or crevices wherein foreign matter may lodge or collect which is or may become very objectionable and even dangerous to health.

My invention also constitutes a marked improvement over structures of similar charac-

ter heretofore employed, as far as I am aware, in that by the employment of a rustless metal ring 15, as shown, oxidation is prevented, whereby the parts of the structure may be kept clean much more readily than otherwise would be the case.

It will be seen that by my invention I have provided a lining or bushing for the opening or openings through the top of a refrigerator cabinet, which may be readily removed and the whole or parts thereof replaced by a new lining or bushing or by new parts. The latter operation is facilitated because of the ease with which the parts 10 and 15 may be disconnected and separated from each other, as heretofore described.

Having thus described my invention, what I claim and desire to secure by Letters Patent is:

1. A lining for an opening through the top of a refrigerator cabinet through which access may be had to a chamber of the said cabinet, comprising a flexible ring member of insulating material located in the said opening, said ring member havng a groove upon its inner side which extends entirely around the same, which groove is located in a plane which is substantially at right angles to the axis of the said ring adjacent the lower end thereof, and an integral ring member of thin sheet metal having an outwardly extending flange at its upper edge which projects into the said groove whereby the said integral metal ring member is held in detachable engagement with the said flexible ring member, the lower portion of the said metal ring member projecting a substantial distance below the lower edge of the said flexible ring member.

2. A lining for an opening through the top of a refrigerator cabinet through which access may be had to a chamber of the said cabinet, comprising a flexible ring member consisting of rubber which is provided upon its inner side with a groove the lower edge of which constitutes a shoulder, which groove extends entirely around the said flexible ring member in a plane substantially at right angles to the axis of the said member, and an integral metal ring member the upper edge of which is provided with an outwardly extending narrow flange, the thinness of the metal of said member being such as to permit distortion thereof to facilitate its insertion into the said flexible ring member so as to engage the flange thereon within the groove of the said flexible member to thereby detachably connect the said members, the lower portion of the said integral ring member extending a substantial distance below the lower edge of the said flexible ring member.

3. A lining for an opening through the top of a refrigerator cabinet through which access may be had to a chamber of the said cabinet, comprising a flexible ring member having a cut-away portion upon the inner side of its upper end, the lower edge of which cut-away portion terminates in a shoulder and the said flexible ring member having a groove upon its inner side a relatively short distance above the lower edge thereof, said groove extending entirely around the said inner side and being located in a plane which is substantially at right angles to the axis of the said flexible ring member, the lower edge of the said groove being in the form of a shoulder which is located in the said plane, and an integral rustless metal ring member the upper end of which is provided with an outwardly extending narrow flange, and the upper end portion of the said metal ring projecting into the lower end portion of the said flexible ring and having its flange in engagement with the said groove and resting upon the shoulder at the lower side of the said groove, the said integral metal ring member being of a thickness to permit its distortion to facilitate the insertion thereof into the said flexible ring member.

4. A top for a refrigerator cabinet having an opening therethrough which opening is adapted to coincide with a chamber of the said cabinet, a lining for the said opening comprising two ring members the lower of which projects into and is detachably connected with the upper of said members, the lower edge of the upper of said members resting against the inner edge of the upper end of the refrigerant receptacle of the cabinet, and a filling of heat-insulating material constituting a part of the said top and surrounding the lower portion of the upper of said members and being located between the same and the upper end portion of the outer wall of the said cabinet.

5. A lining for an opening through the top of a refrigerator cabinet through which access may be had to a chamber of the said cabinet comprising a flexible ring member detachably located in said opening, said ring member having a shoulder on the inner side thereof, said shoulder being located in a plane which is substantially at right angles to the axis of the said ring member adjacent the lower part, and a ring member of thin sheet metal having an outwardly extending flange at its upper edge which rests upon the said shoulder to detachably support the said sheet metal ring member within the said flexible ring member, the lower portion of the said sheet metal ring member projecting a substantial distance below the lower edge of the said flexible ring member.

6. In a refrigerator cabinet having an opening in the top thereof, a container within the cabinet and accessible through said opening, a flexible lining of heat insulating material secured in said opening and having a groove in its inner face in spaced relation

to its upper end, a metallic protecting member fitting closely within the lower end of said flexible lining, and an outwardly turned flange on said protecting member for engagement with said groove to retain the protecting member in position, said protecting member extending below the lower edge of said flexible lining, and the upper end of said container and being spaced from said container.

In testimony that I claim the foregoing as my invention I have hereunto signed my name this 14th day of June, A. D. 1929.

NELSON MARTIN VANDEGRIFT.

to its upper end, a metallic protecting member fitting closely within the lower end of said flexible lining, and an outwardly turned flange on said protecting member for engagement with said groove to retain the protecting member in position, said protecting member extending below the lower edge of said flexible lining and the upper end of said container and being spaced from said container.

In testimony that I claim the foregoing as my invention I have hereunto signed my name this 14th day of June, A. D. 1929.

NELSON MARTIN VANDEGRIFT.

CERTIFICATE OF CORRECTION.

Patent No. 1,823,517. Granted September 15, 1931, to

NELSON MARTIN VANDEGRIFT.

It is hereby certified that error appears in the printed specification of the above numbered patent requiring correction as follows: Page 3, line 116, claim 5, for the word "part" read end thereof; and that the said Letters Patent should be read with this correction therein that the same may conform to the record of the case in the Patent Office.

Signed and sealed this 3rd day of November, A. D. 1931.

M. J. Moore,
Acting Commissioner of Patents.

(Seal)

CERTIFICATE OF CORRECTION.

Patent No. 1,823,517. Granted September 15, 1931, to

NELSON MARTIN VANDEGRIFT.

It is hereby certified that error appears in the printed specification of the above numbered patent requiring correction as follows: Page 3, line 116, claim 5, for the word "part" read end thereof; and that the said Letters Patent should be read with this correction therein that the same may conform to the record of the case in the Patent Office.

Signed and sealed this 3rd day of November, A. D. 1931.

M. J. Moore,
Acting Commissioner of Patents.

(Seal)