(12) UK Patent Application (19) GB (11) 2563318 (13) A

(43) Date of A Publication 12.12.2018

(21) Application No: 1805500.4

(22) Date of Filing: 23.01.2017

Date Lodged: 04.04.2018

(62) Divided from Application No
1701076.0 under section 15(9) of the Patents Act 1977

(71) Applicant(s):
Hebe Studio Limited
(Incorporated in the United Kingdom)
Tuthill Park, WARDINGTON, Oxfordshire, OX17 1RR, United Kingdom

(72) Inventor(s):
James Tuthill
Johannes Paul
Simon Nicholls
William Windham

(74) Agent and/or Address for Service:
First Thought IP Limited
35 New Broad Street House, New Broad Street, LONDON, EC2M 1NH, United Kingdom

(51) INT CL:
A01K 1/02 (2006.01) ***E04B 1/344*** (2006.01)

(56) Documents Cited:
GB 2491638 A **US 5522344 A**

(58) Field of Search:
INT CL **A01K, E04B, E04H**
Other: **EPODOC, WPI**

(54) Title of the Invention: **Improvements relating to animal enclosures**
Abstract Title: **Composite wire-mesh panel for animal enclosure**

(57) The panel comprises a first panel part 79, a second panel part 79 and a plurality of couplings (77, fig 22) for connecting an edge of said first panel part to an edge of said second panel part to form a larger composite panel. The panel also comprises a reinforcing bar 83, and a second plurality of couplings (89, fig 27) for connecting the bar to the panel parts to maintain the shape of said composite panel. The bar may be in the form of a rod with a pair of ribs extending generally orthogonally from both ends the rod. A plurality of panels may form an animal enclosure.

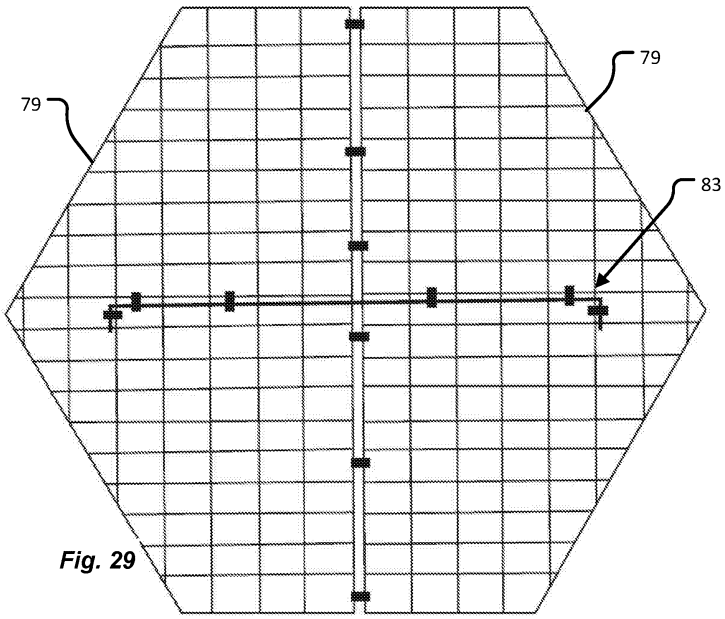

Fig. 29

GB 2563318 A

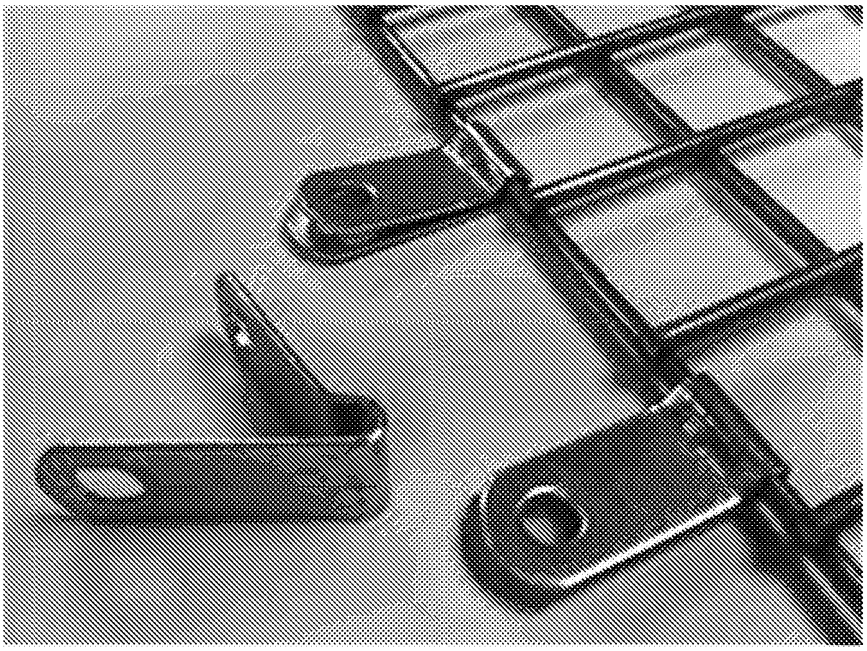

Fig. 1 (Prior Art)

Fig. 2 (Prior Art)

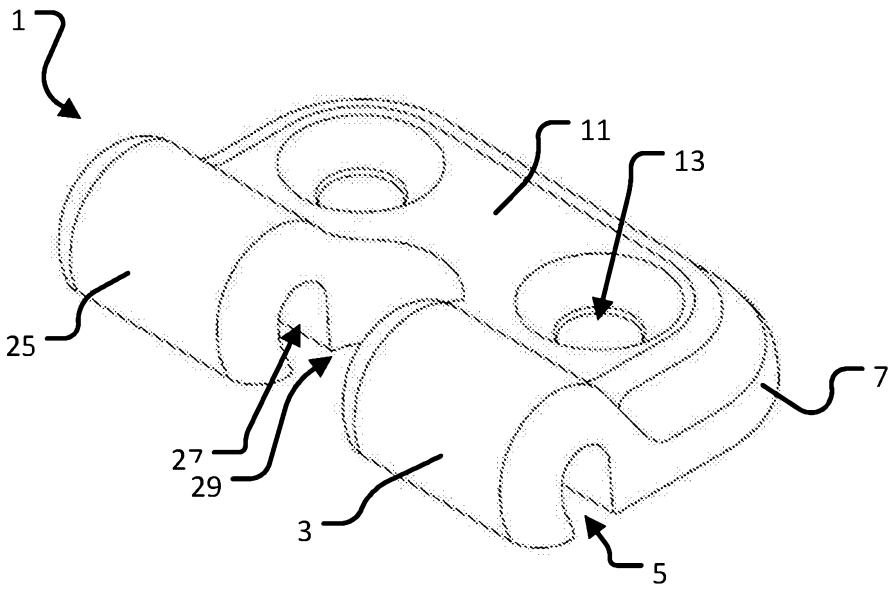

Fig. 3

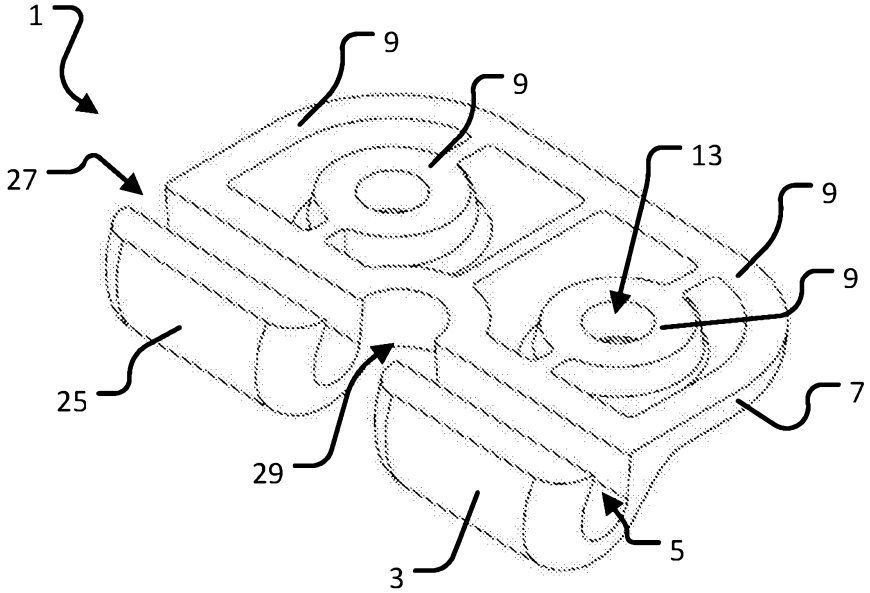

Fig. 4

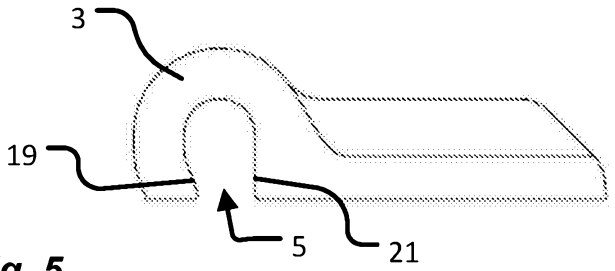

Fig. 5

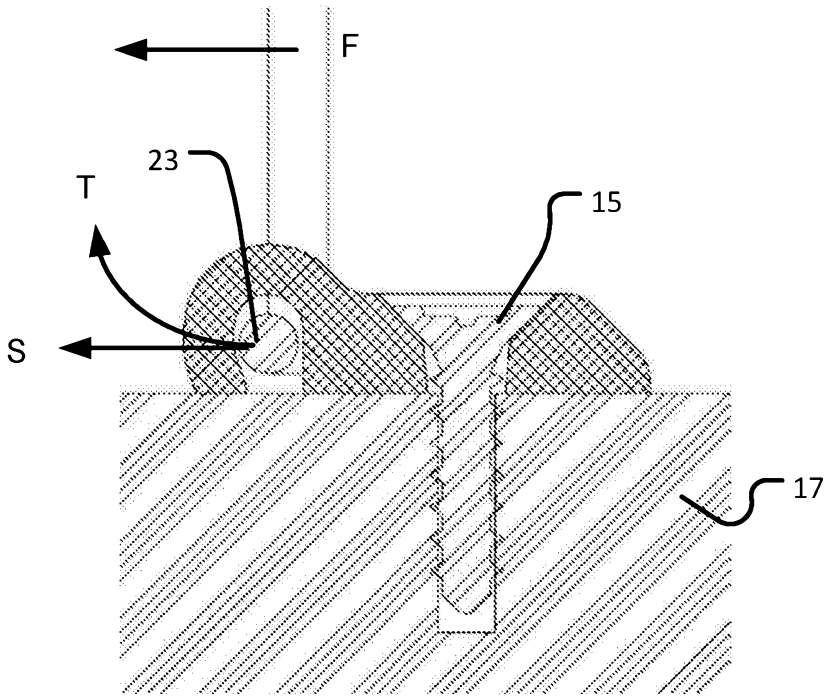

Fig. 6

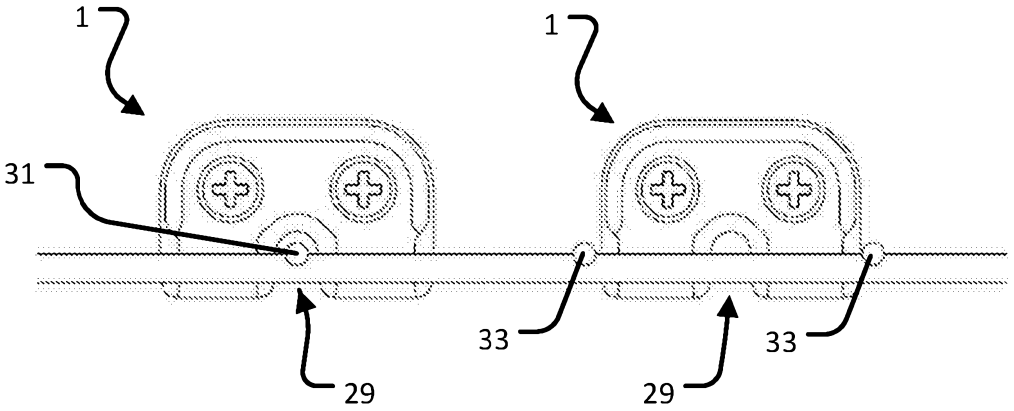

Fig. 7

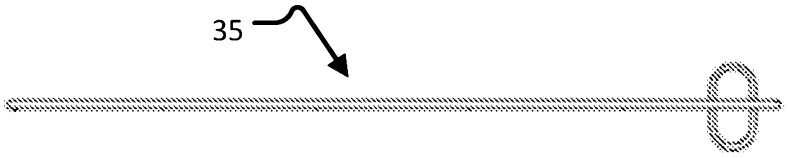

Fig. 8

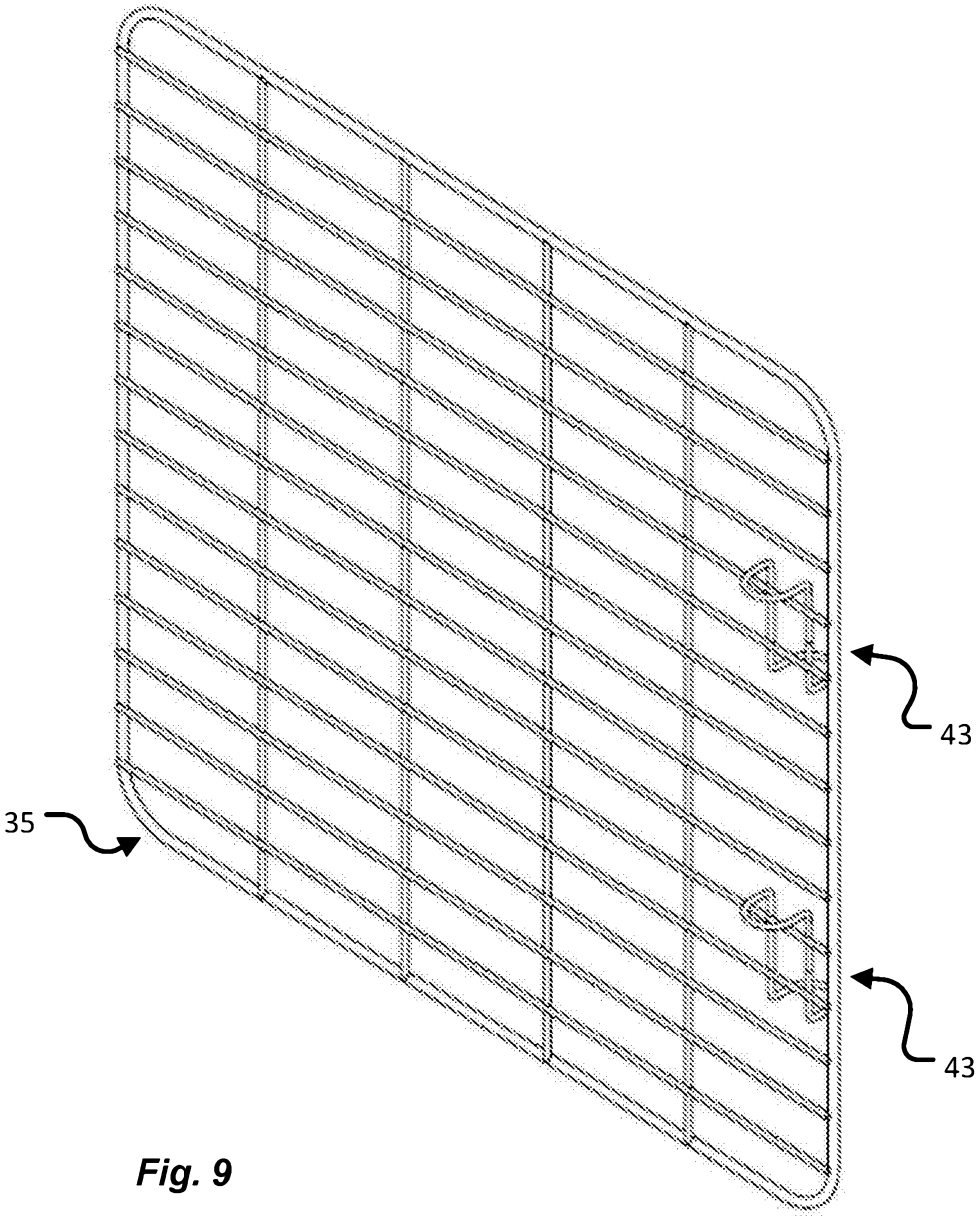

Fig. 9

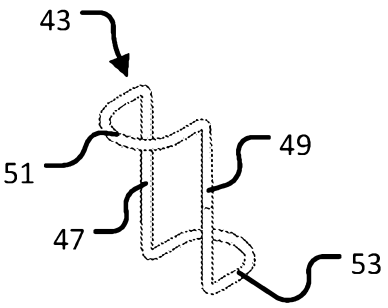

Fig. 11

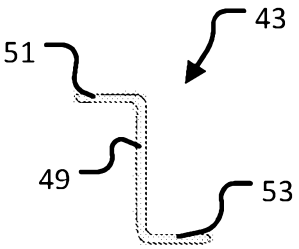

Fig. 12

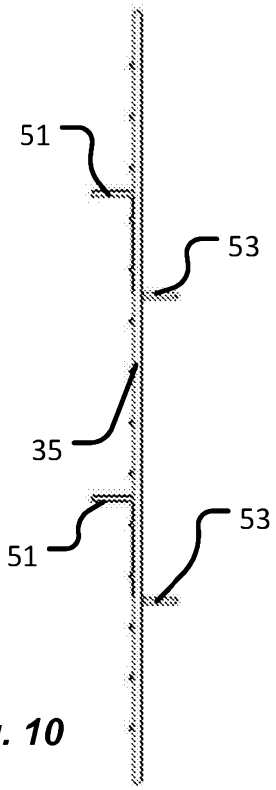

Fig. 10

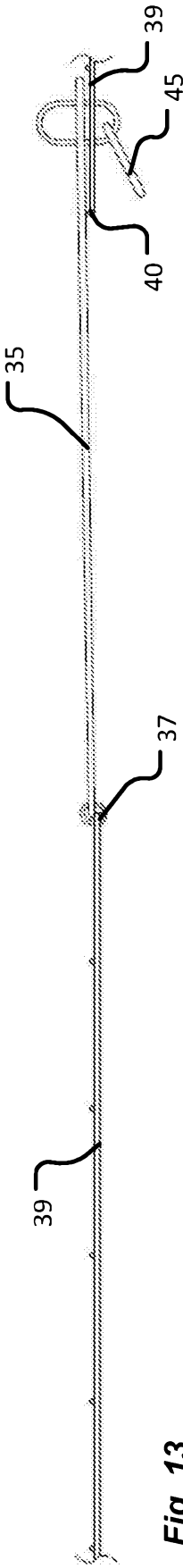

Fig. 13

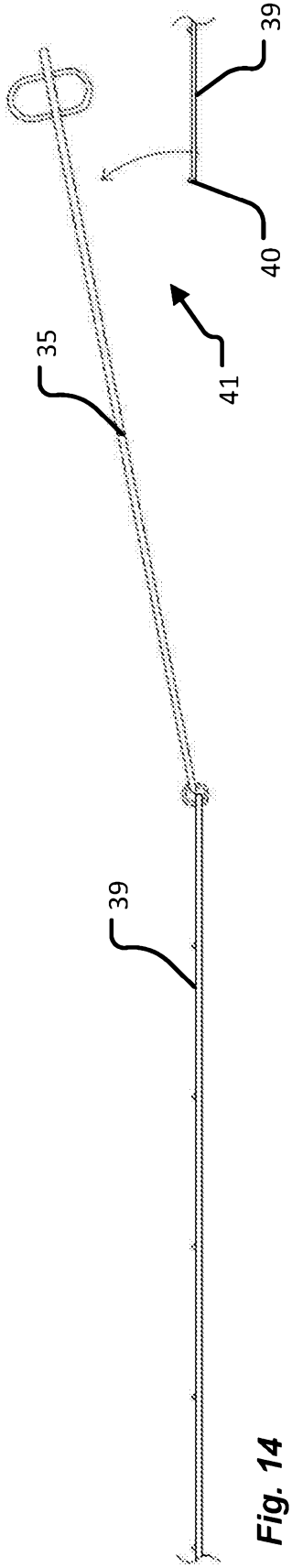

Fig. 14

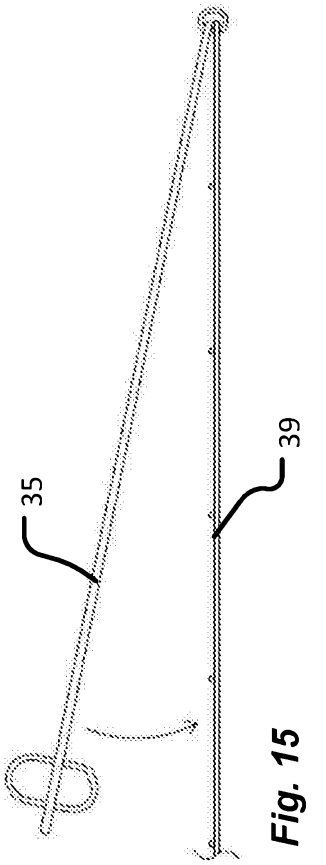

Fig. 15

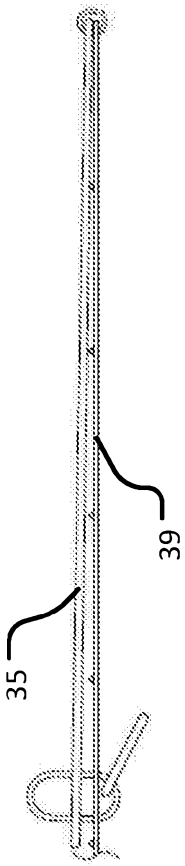

Fig. 16

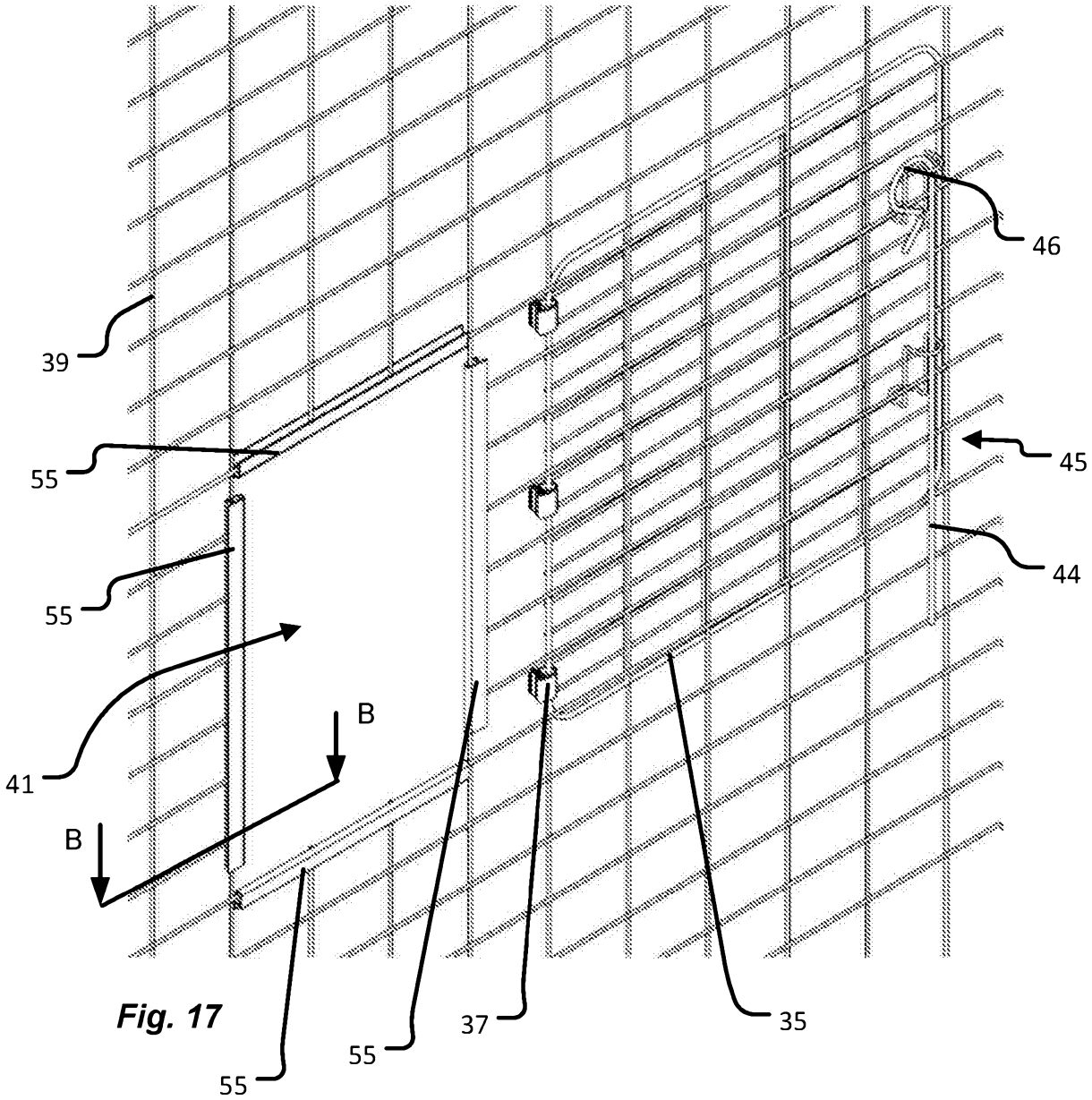

Fig. 17

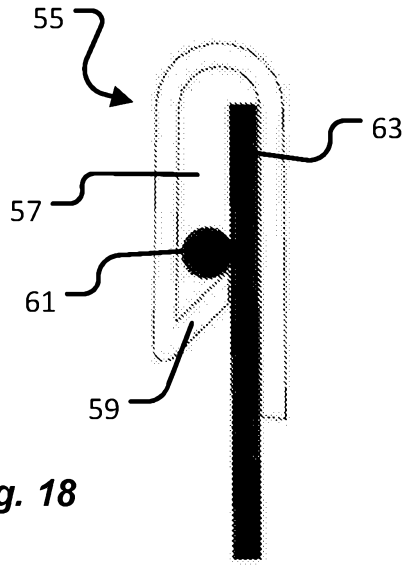

Fig. 18

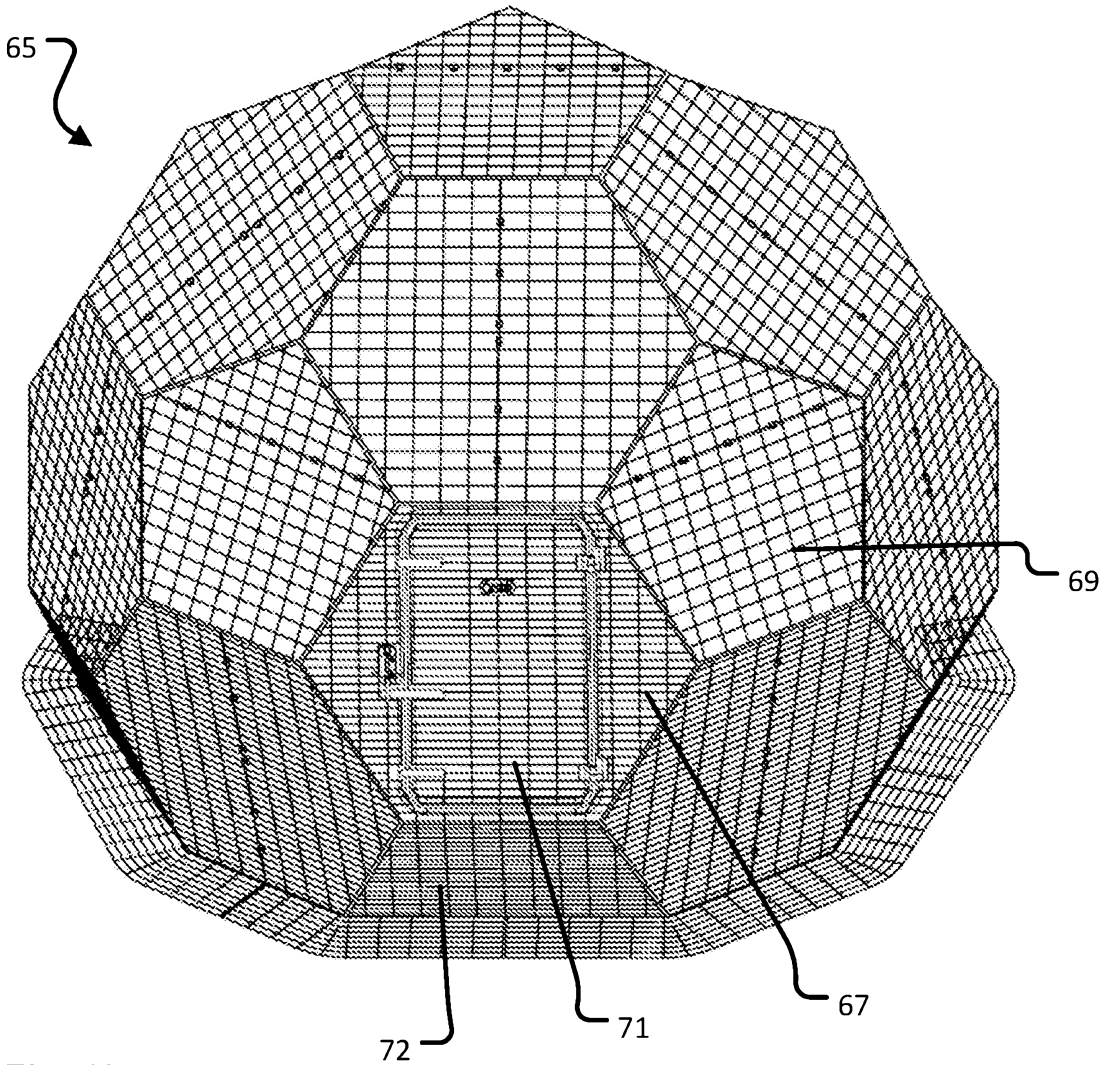

Fig. 19

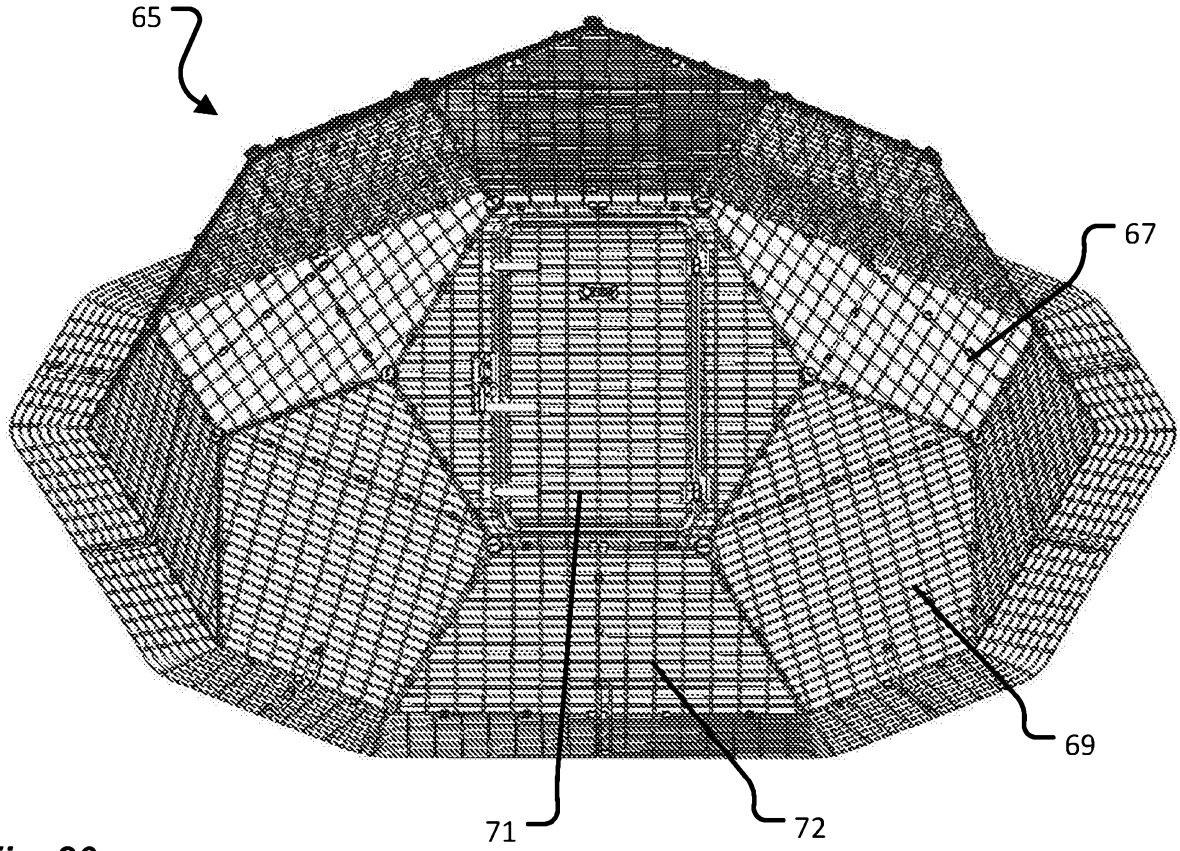

Fig. 20

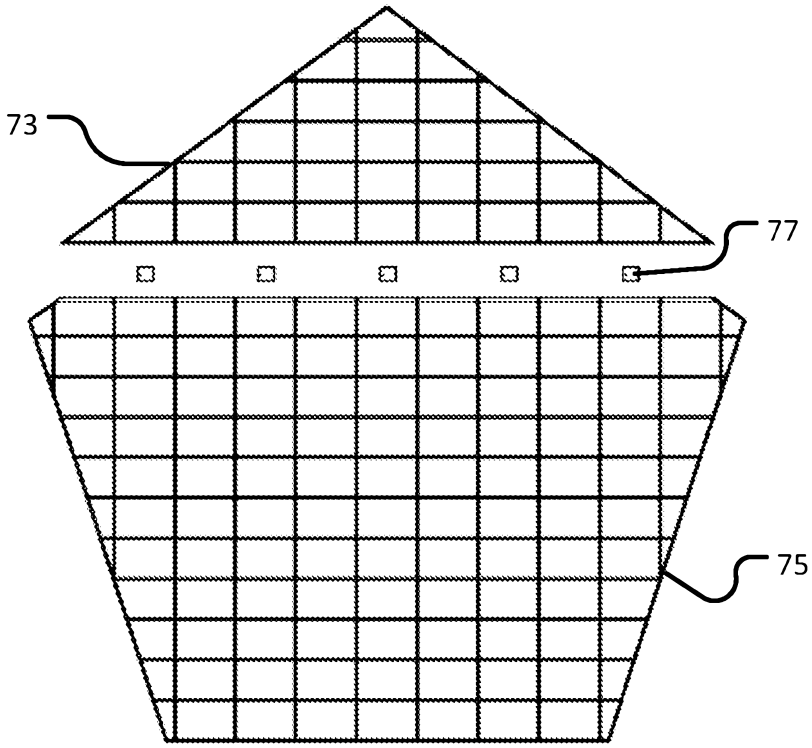

Fig. 21

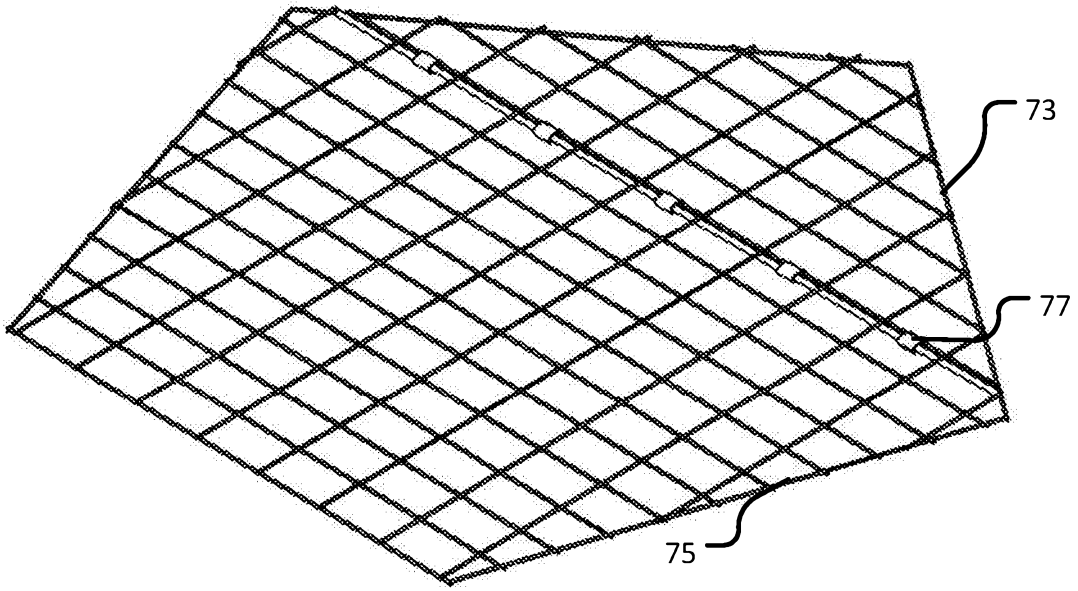

Fig. 22

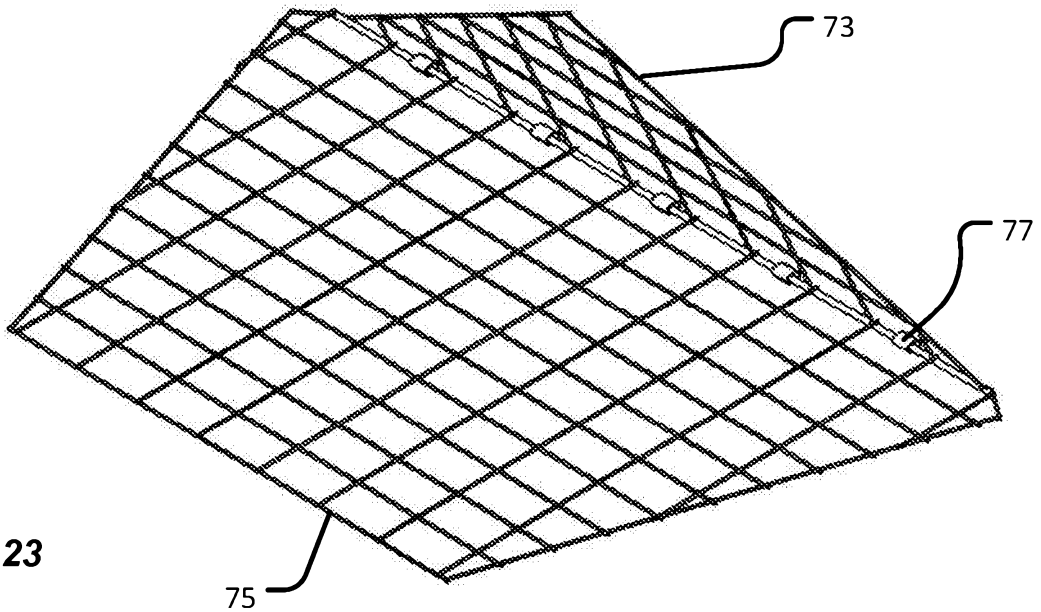

Fig. 23

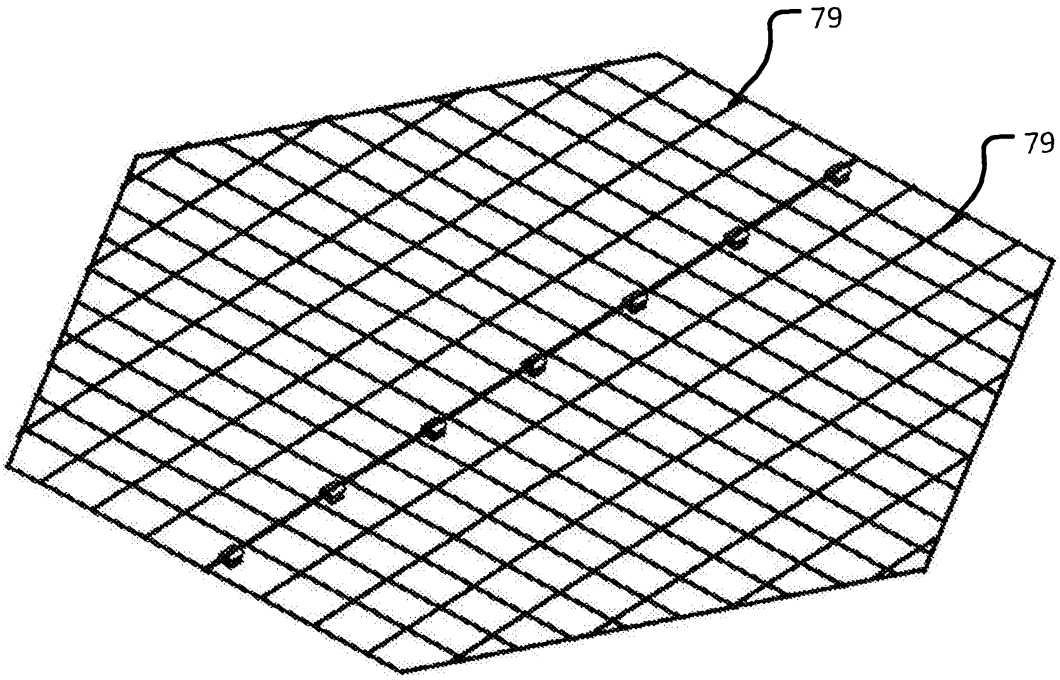

Fig. 24

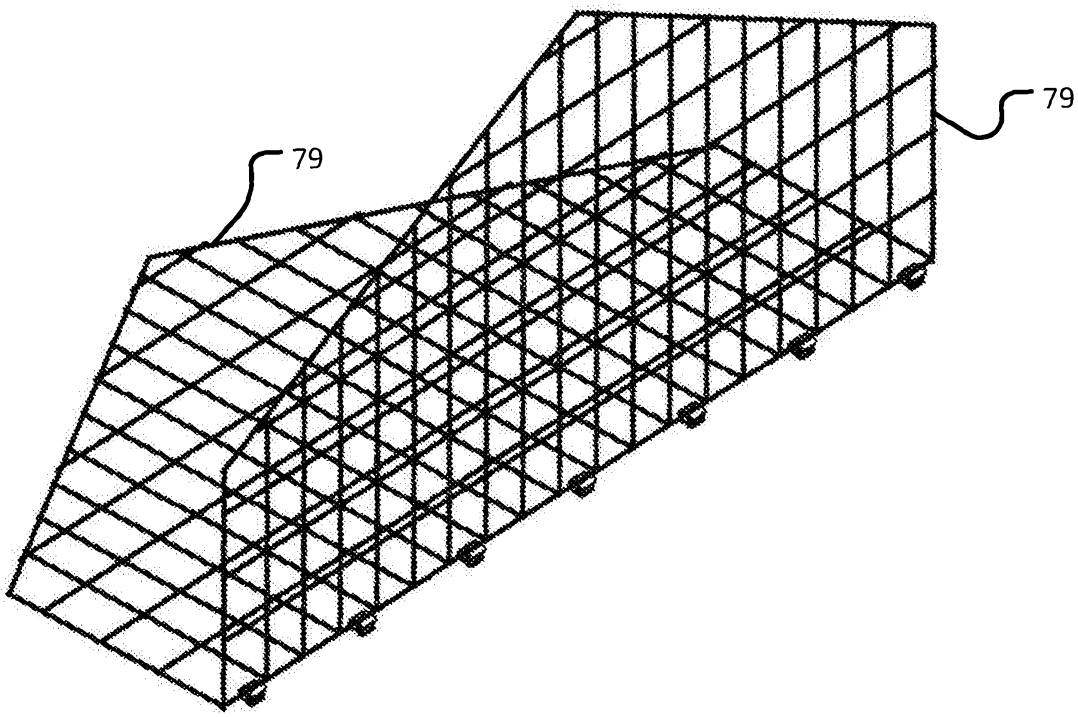

Fig. 25

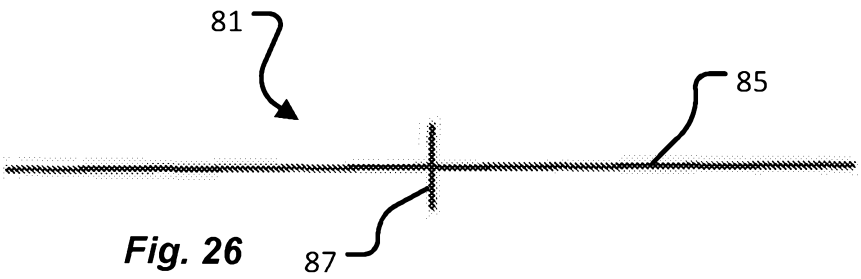

Fig. 26

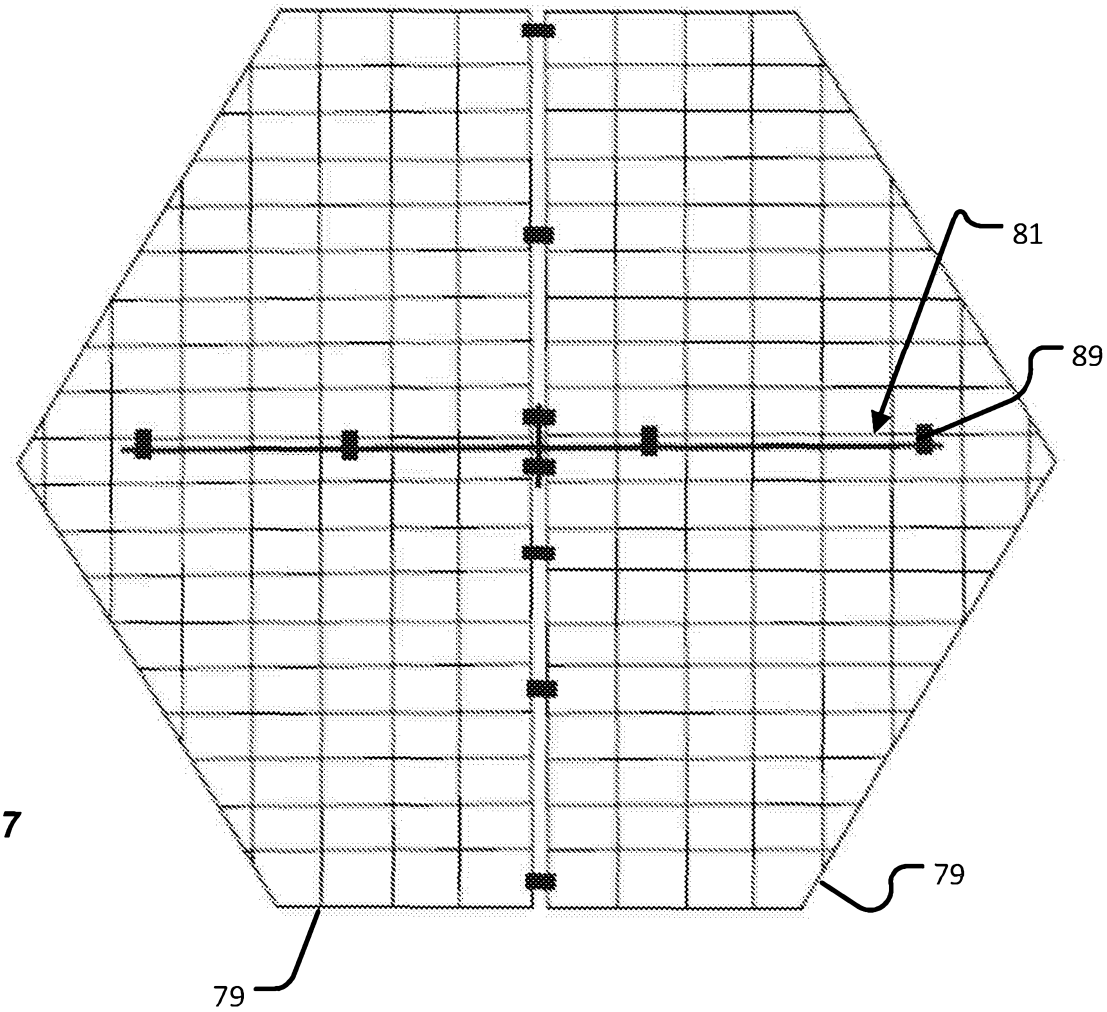

Fig. 27

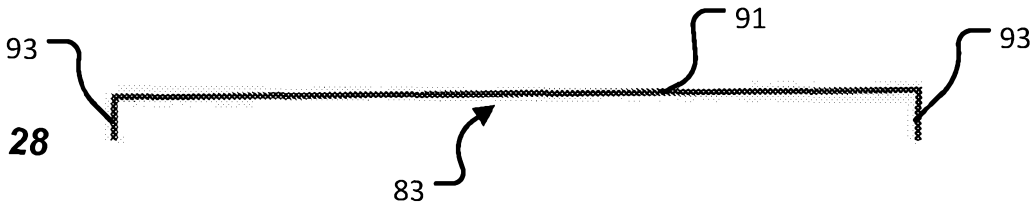

Fig. 28

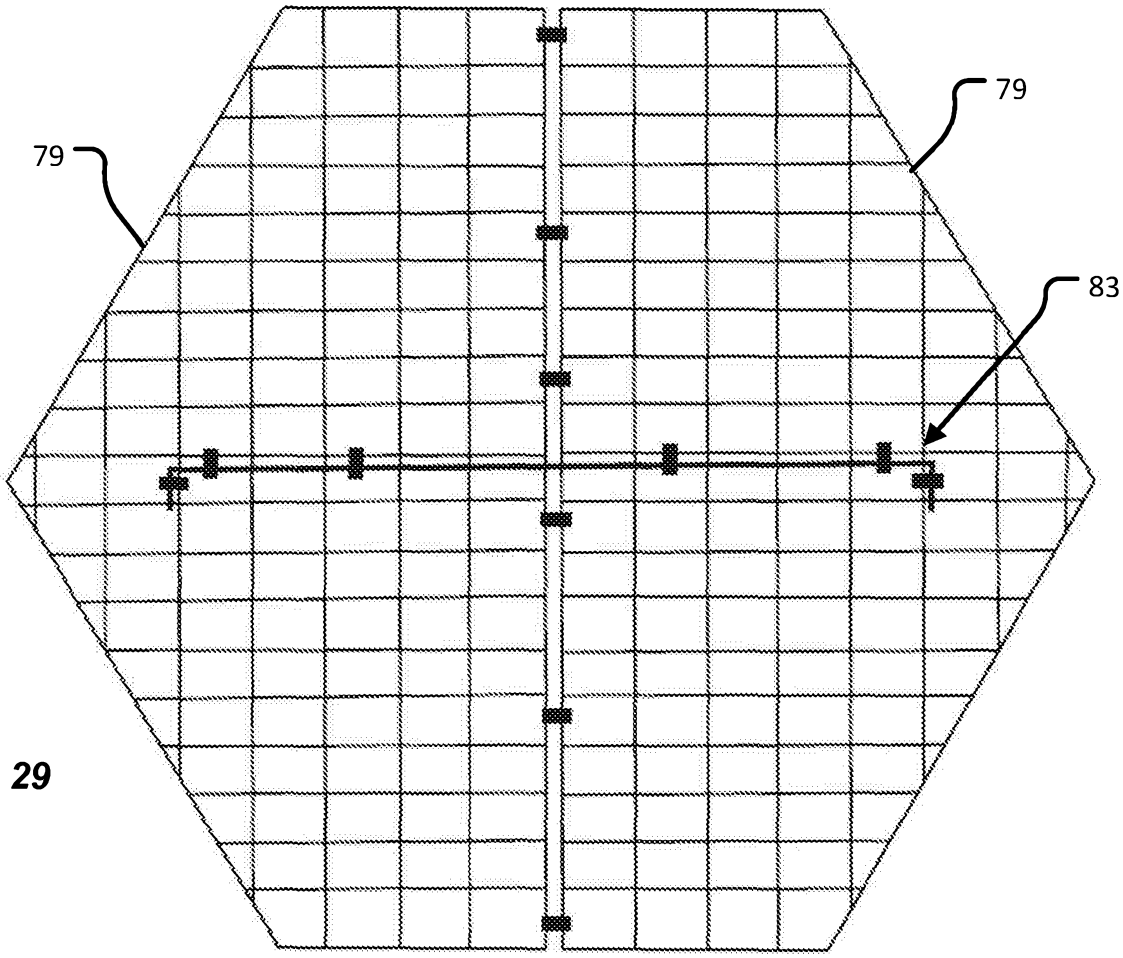

Fig. 29

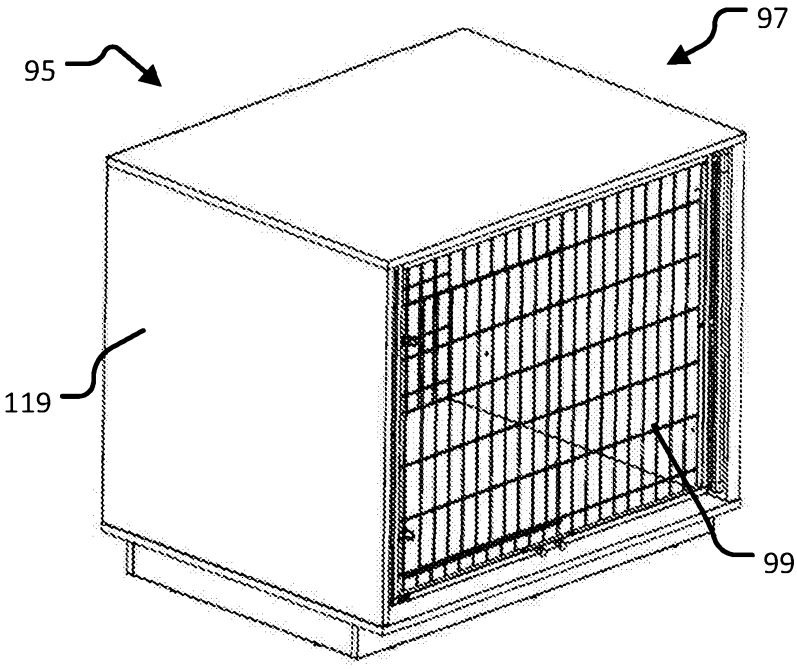

Fig. 30

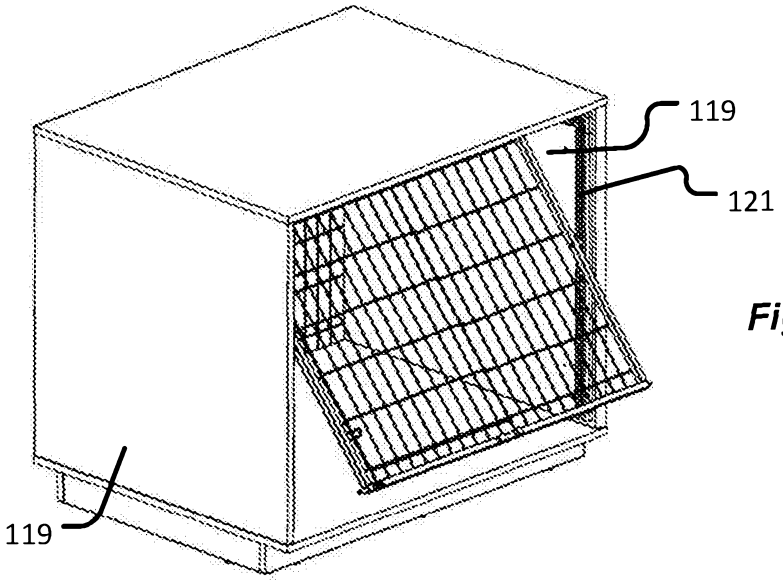

Fig. 31

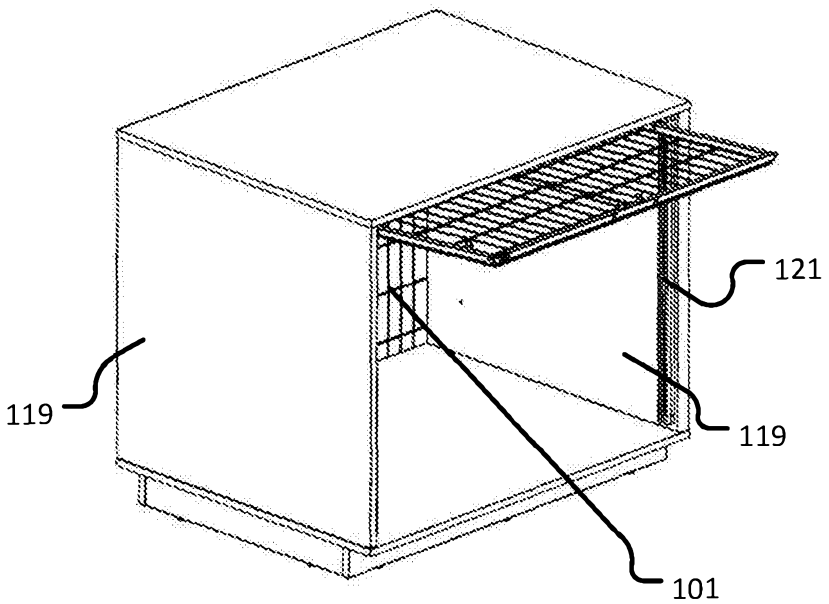

Fig. 32

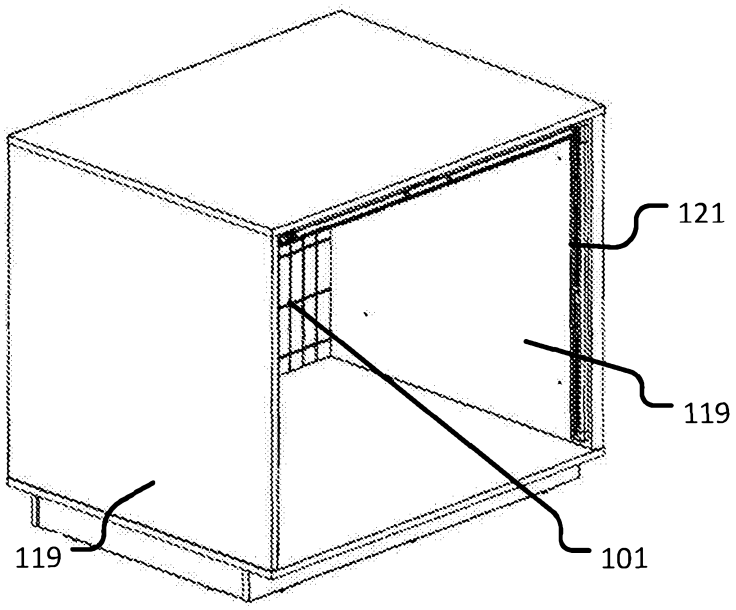

Fig. 33

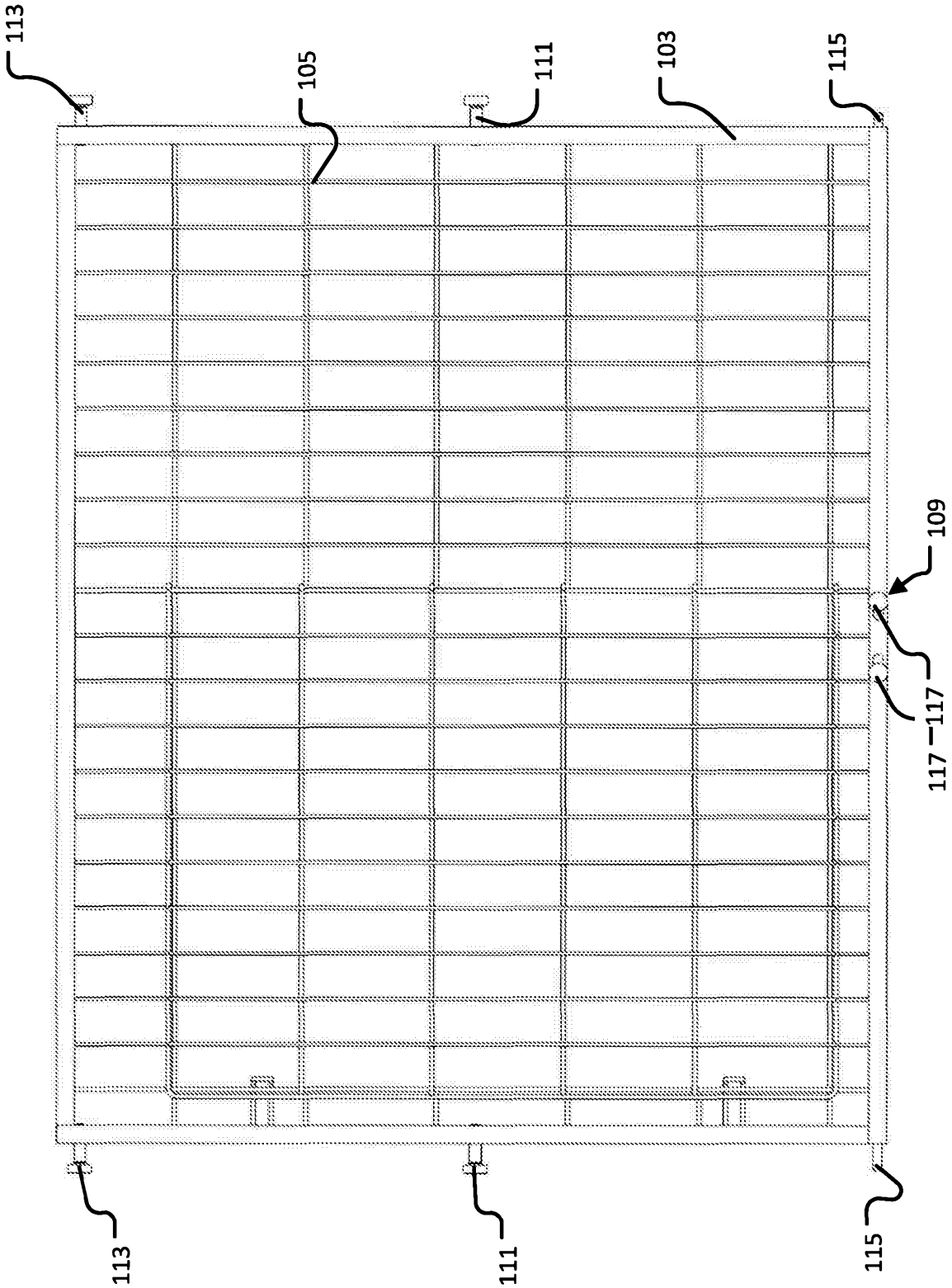

Fig. 34

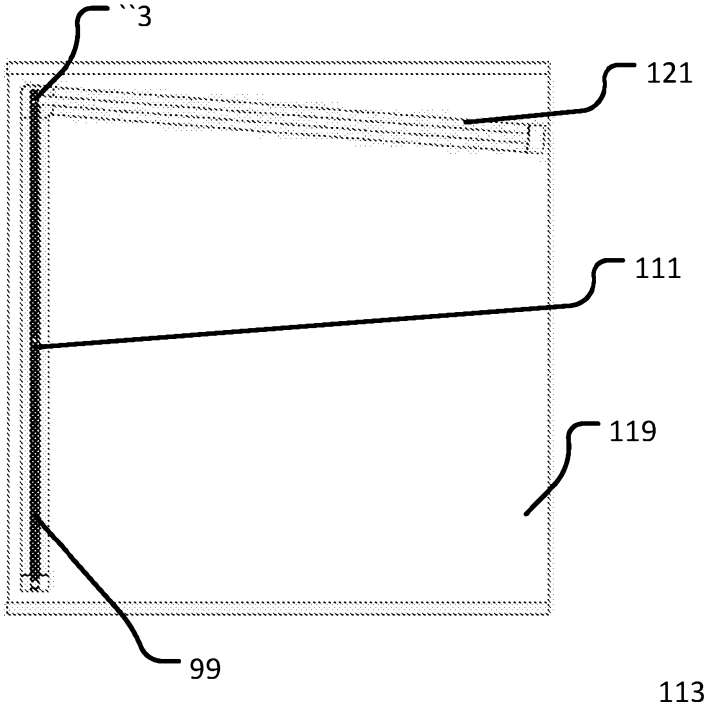

Fig. 35

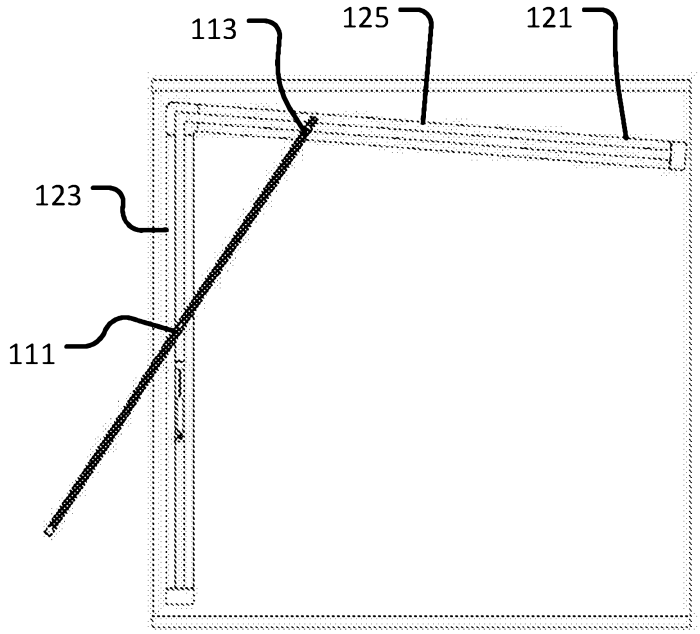

Fig. 36

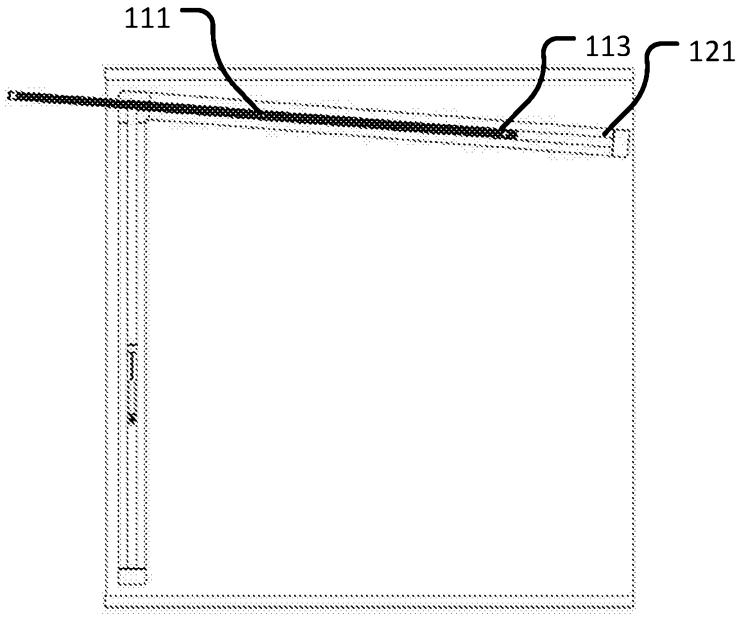

Fig. 37

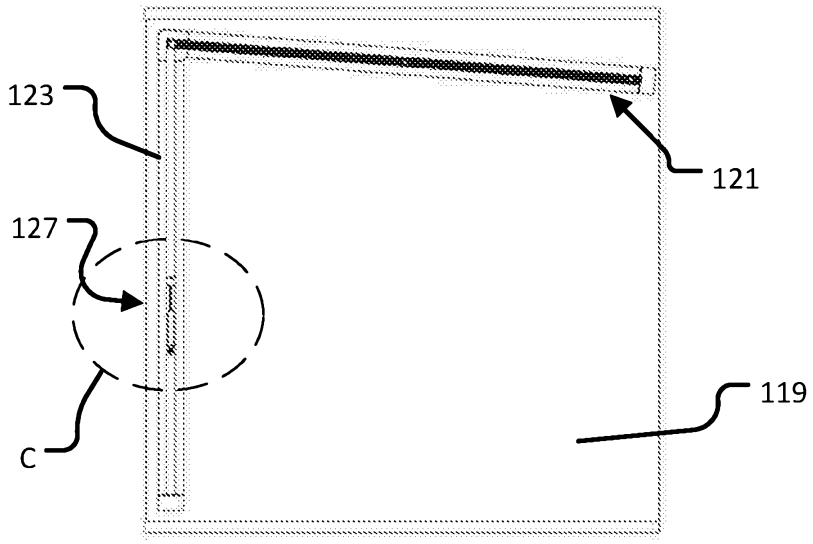

Fig. 38

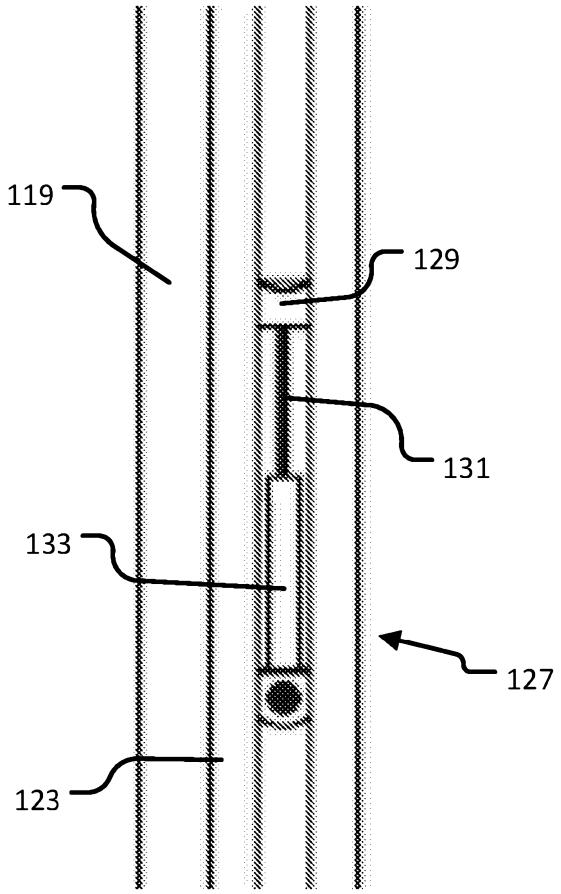

Fig. 39

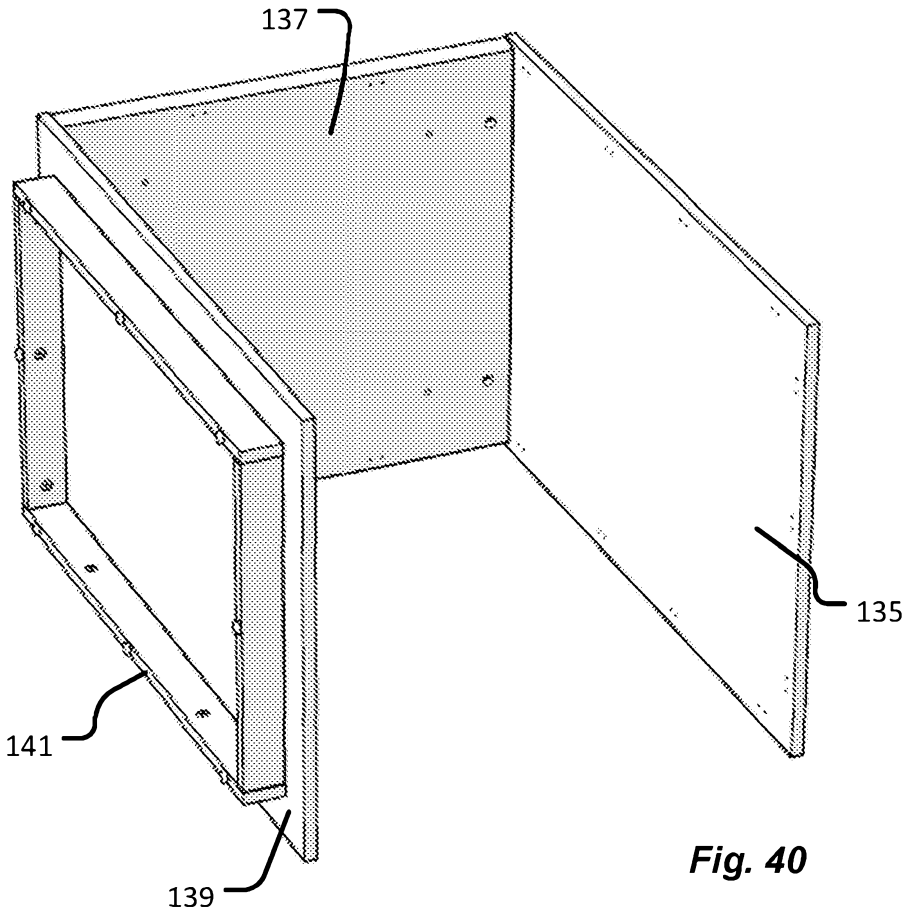

Fig. 40

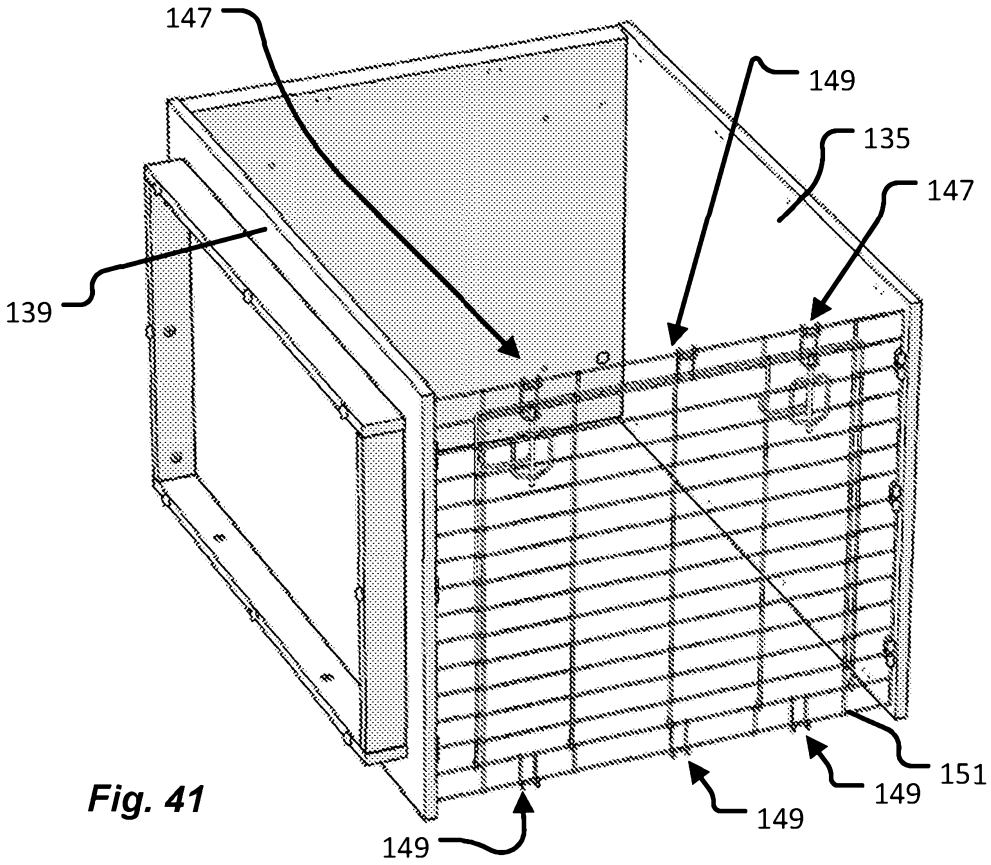

Fig. 41

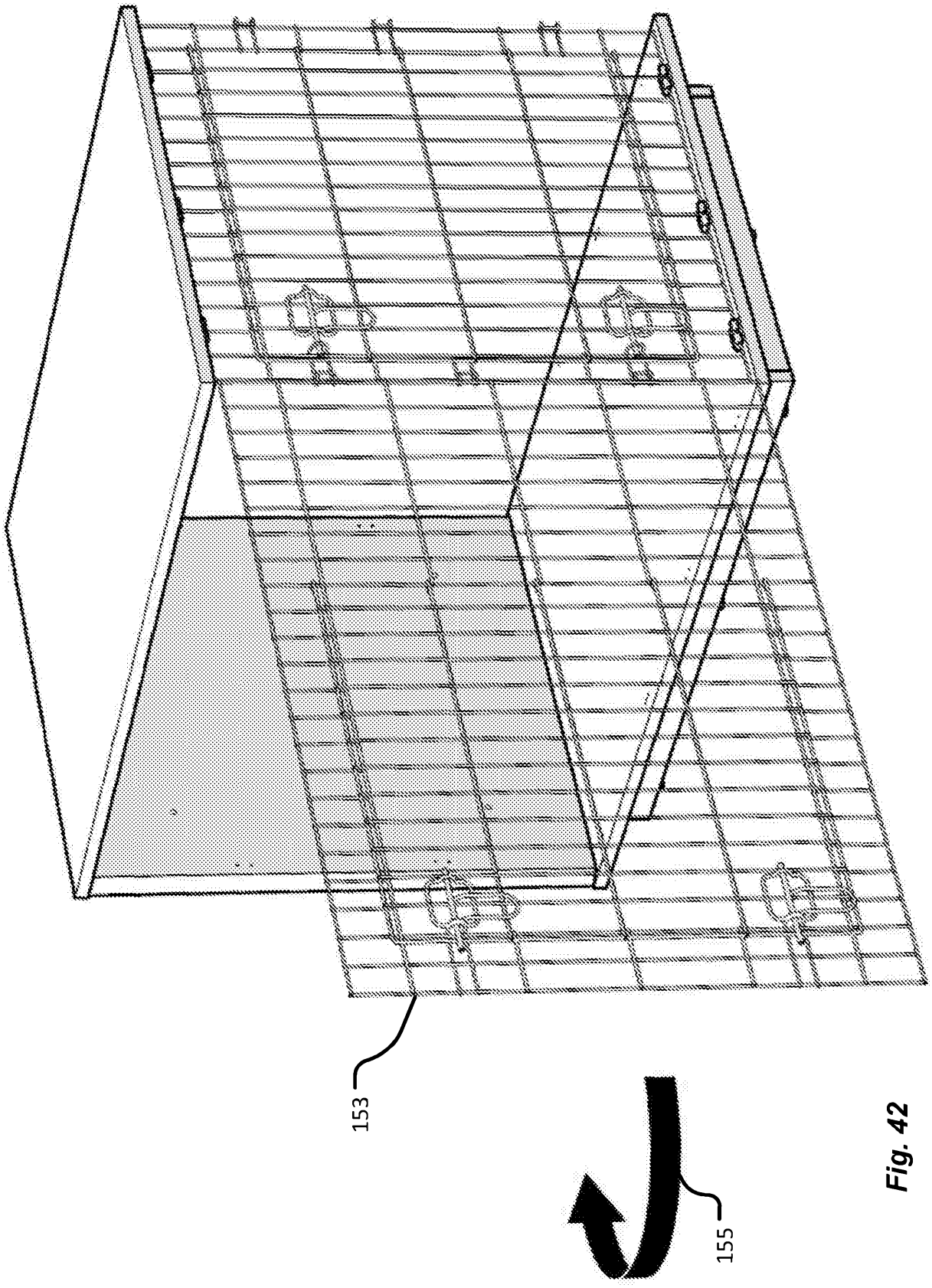

Fig. 42

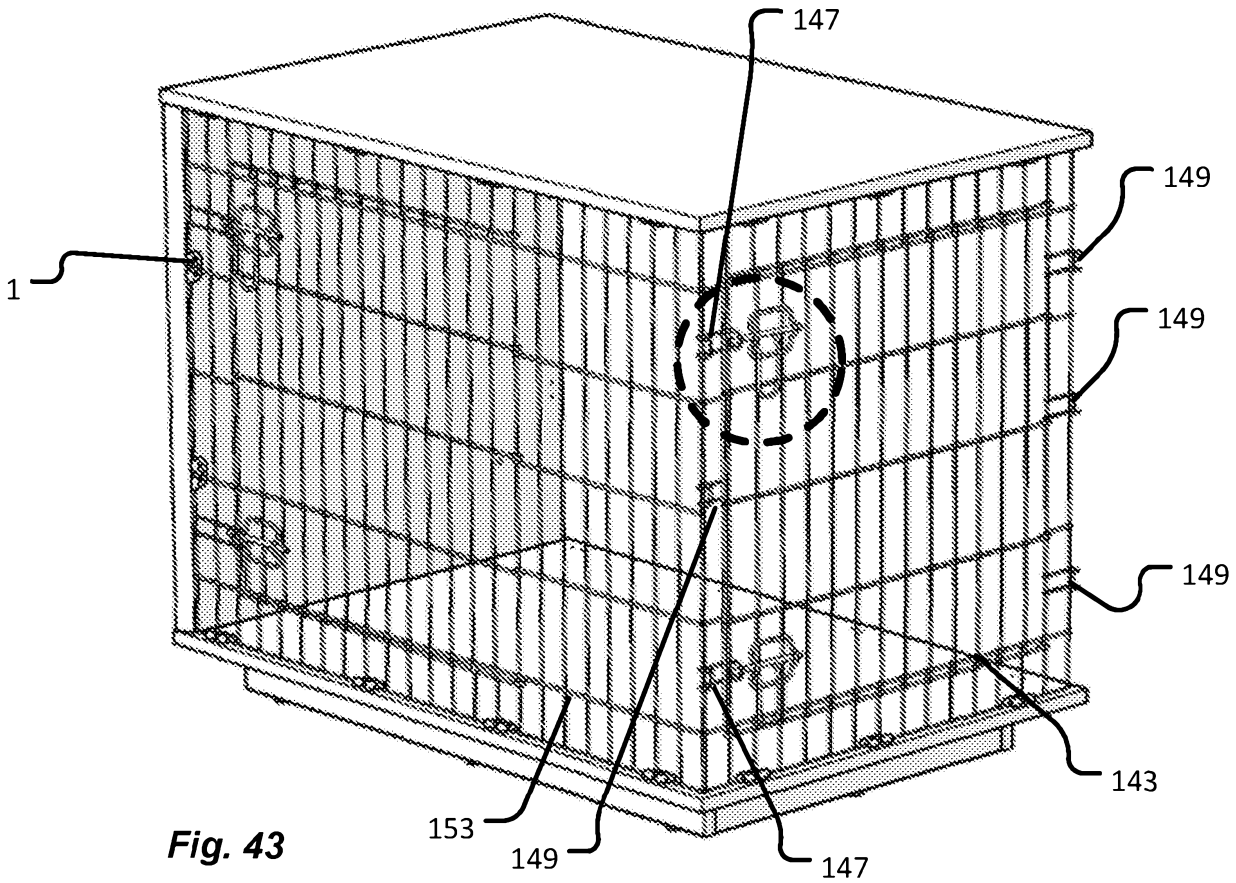

Fig. 43

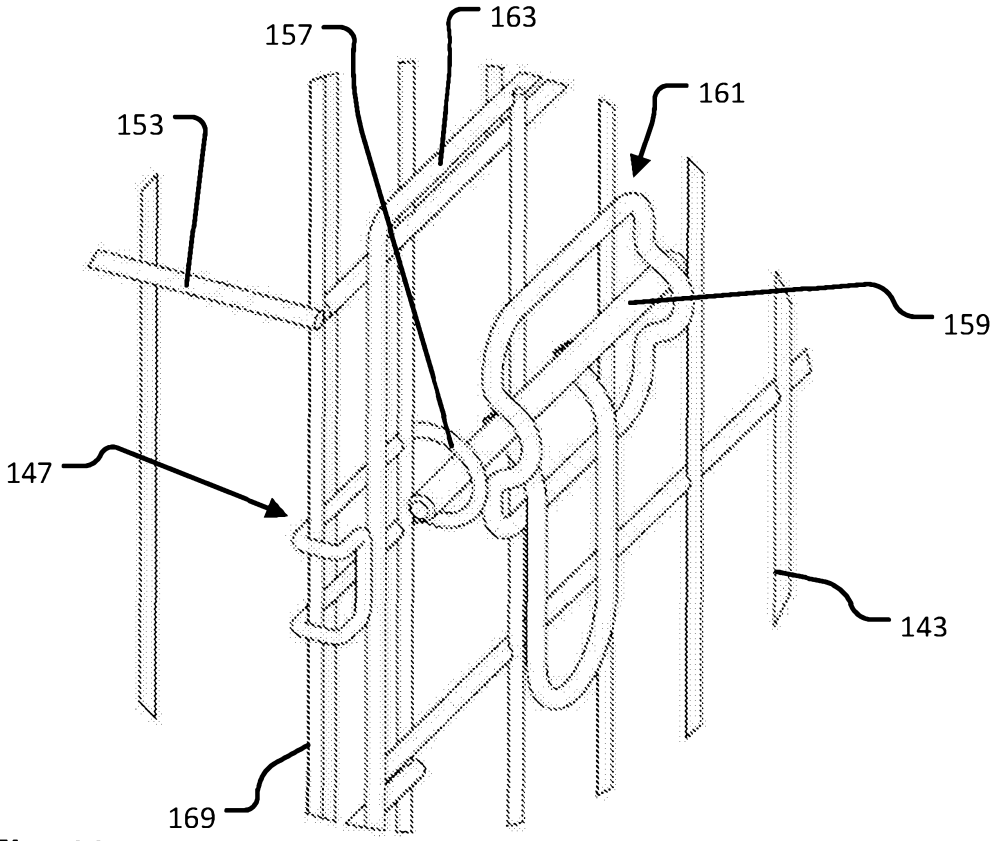

Fig. 44

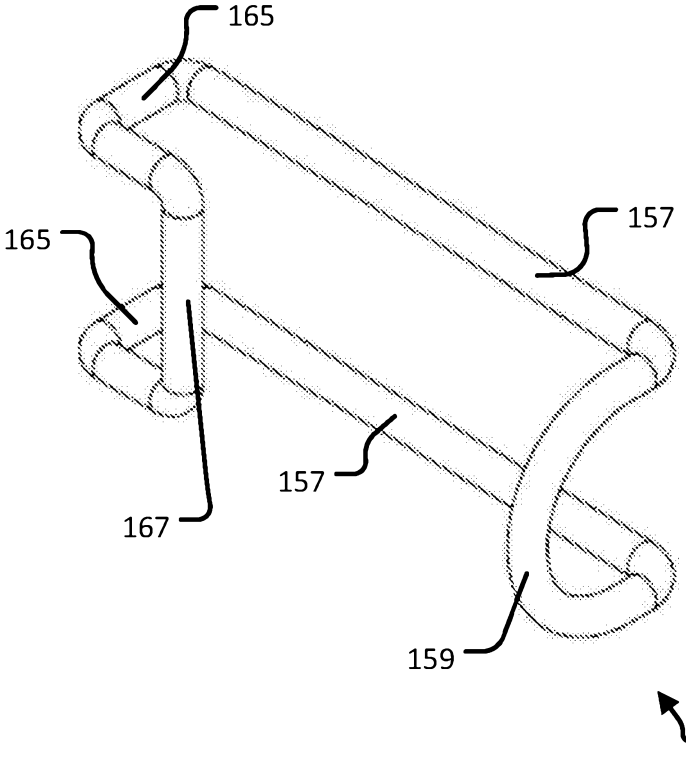

Fig. 45

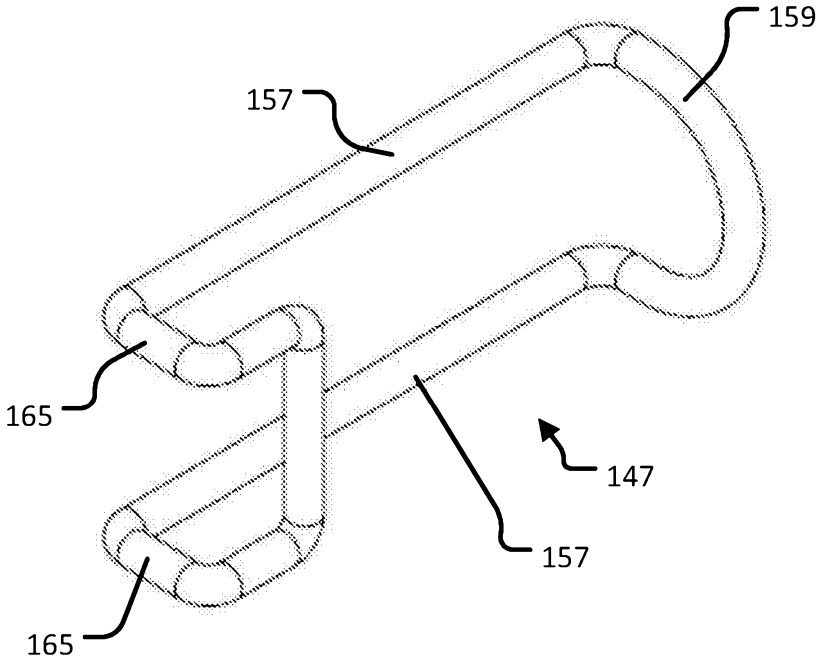

Fig. 46

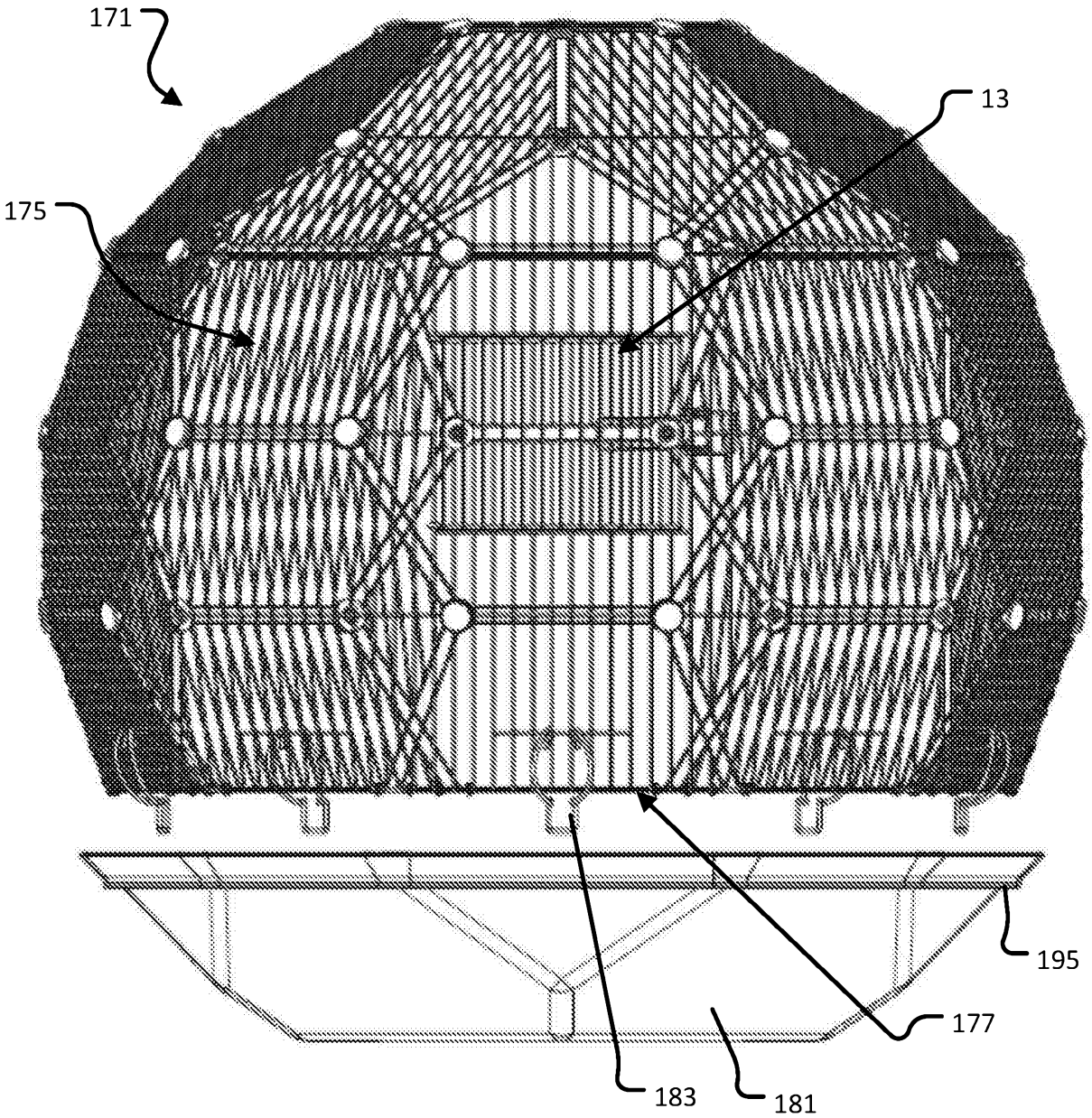

Fig. 47

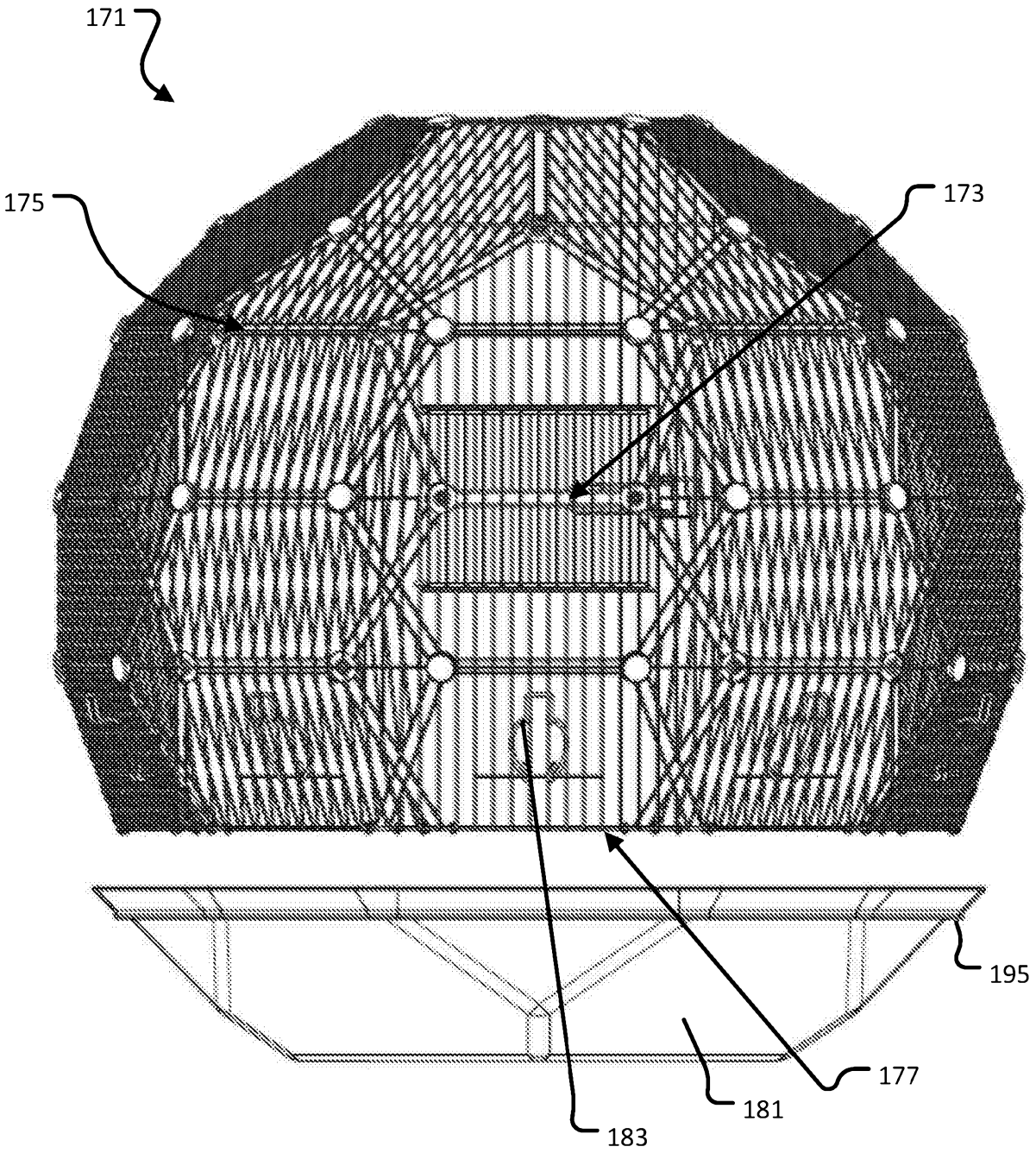

Fig. 48

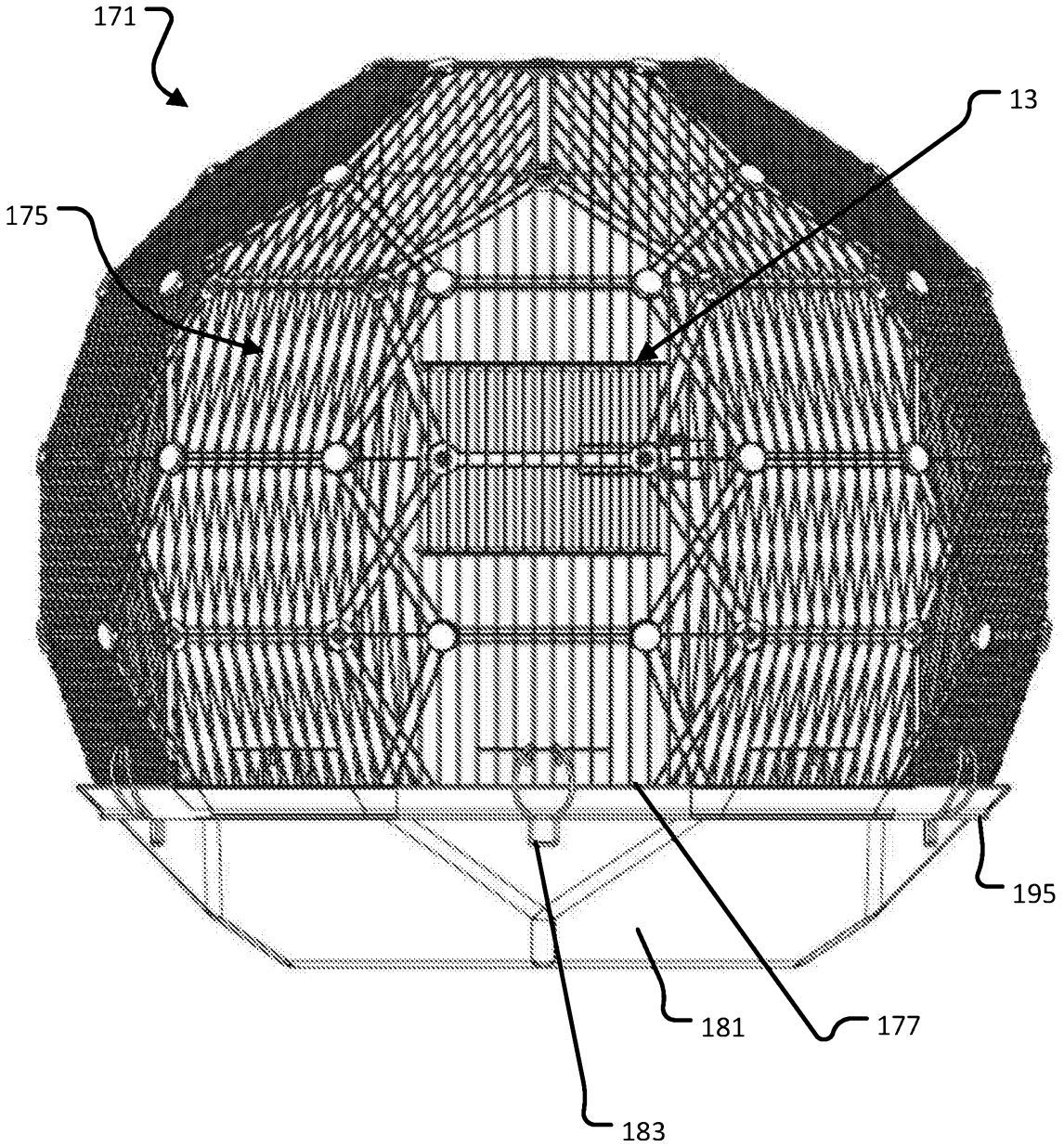

Fig. 49

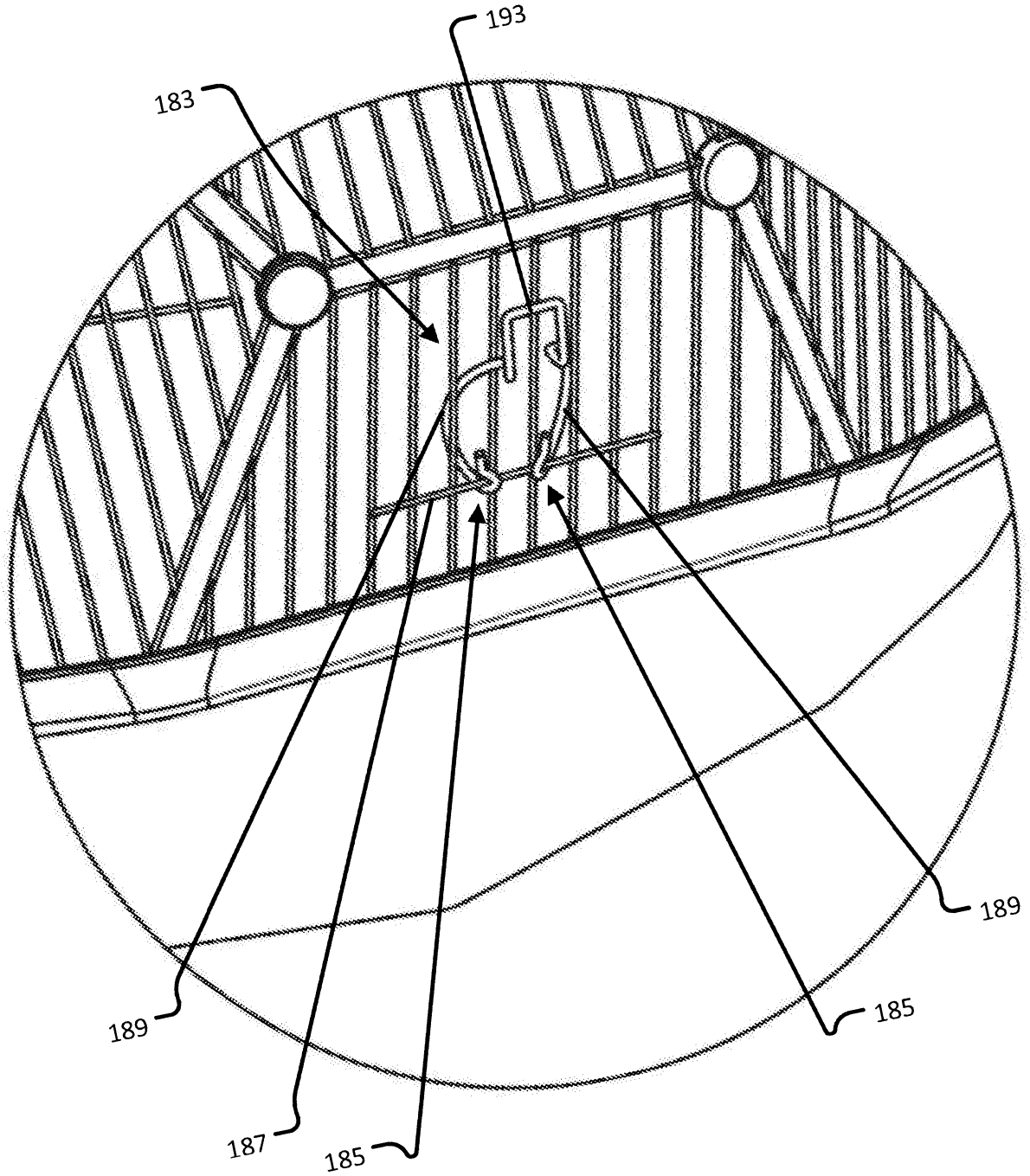

Fig. 50

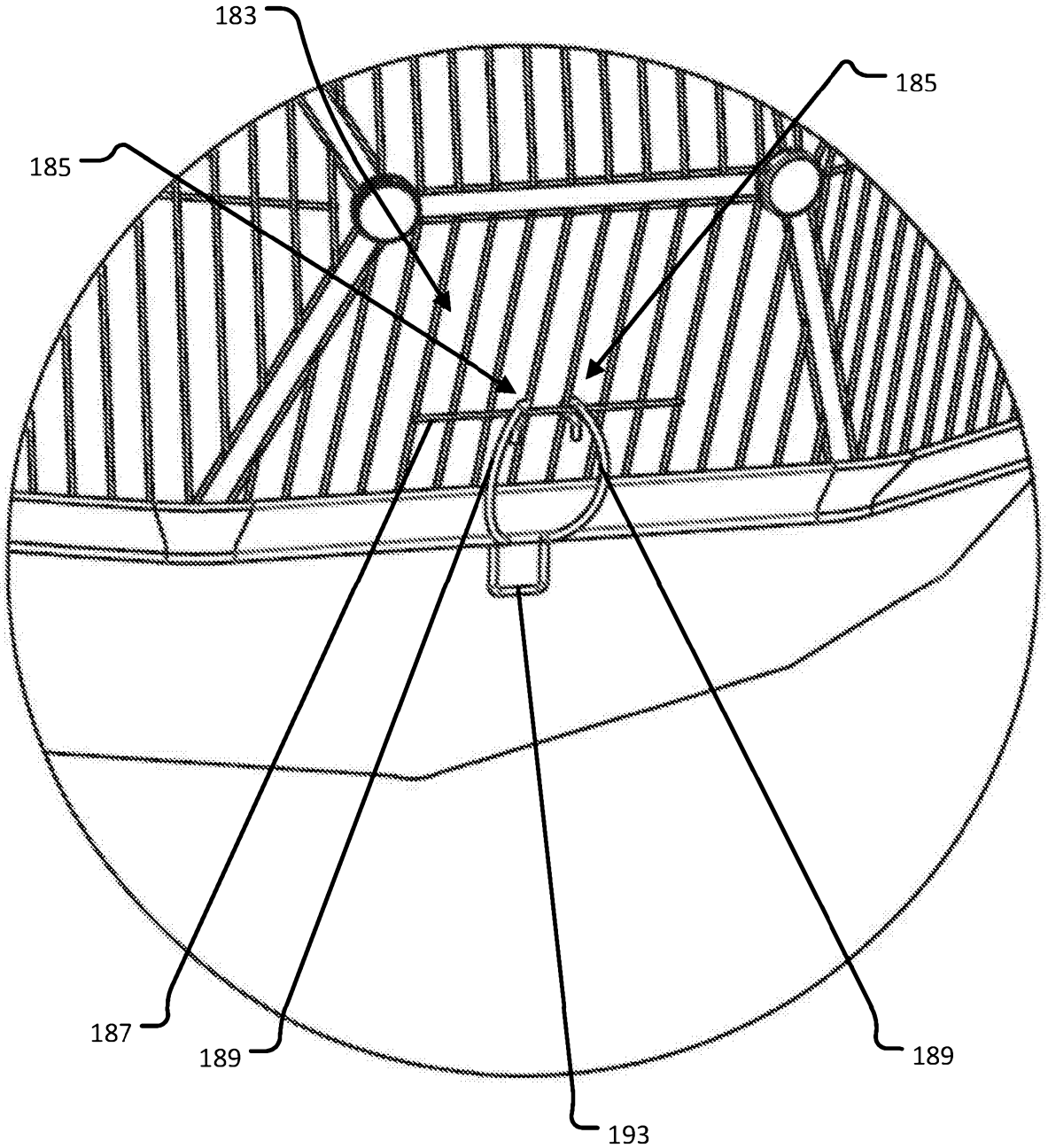

Fig. 51

IMPROVEMENTS RELATING TO ANIMAL ENCLOSURES

Field

This application discloses a number of improvements to animal enclosures, particularly but not exclusively to enclosures for domestic animals, such as birds, cats, dogs, rabbits, chickens and the like. Several different improvements are disclosed in this application, and whilst many of these improvements are described hereafter with reference to an animal enclosure for a particular type of animal it will be appreciated that the particular applications described herein are merely illustrative and that the improvements concerned may be applied to enclosures for other types of animal than the particular type of animal disclosed herein.

Background

It has previously been proposed to construct an animal enclosure by affixing a wire mesh (for example a wire mesh with square or rectangular openings) at multiple points along a straight edge of the mesh to a supporting wall or floor – for example a wooden panel.

Construction of such a cage has previously been accomplished by using so-called P-clips (so named because they are shaped like a P in cross section) of the type depicted in Fig. 1. A problem with such clips is that as the diameter of the mesh is typically smaller than the diameter of the enlarged part of the clip, the clips tend to be freely rotatable round the mesh. As a consequence, it can be difficult and inconvenient to fix the mesh to the supporting wall, particularly when one is trying to affix the mesh to a floor panel or an upper roof panel. To address this issue, it has been proposed to use a P-clip that has been lined with a high friction rubberised liner (i.e. a clip of the type shown in Fig. 2), and whilst such a clip would likely mitigate the abovementioned problem, an animal within the enclosure might attempt to eat the liner. Another issue with both of the clips depicted in Figs. 1 and 2 is that the fixing used to couple the clip to the supporting wall sits proud of the clip and thus poses a potential hazard to an animal within the enclosure. A first aspect of the present invention has been devised with these problems in mind.

A second aspect of the present invention addresses the issue that with such mesh enclosures it is not unusual for an owner of an enclosure to want to extend the enclosure (for example by attaching a mesh corridor leading to a second enclosure), or adapt the enclosure so that it includes a door for accessing the interior of the enclosure. In the context of extending the enclosure, once the mesh corridor is affixed to the outside of the enclosure in the vicinity of a door, it is problematic for users to open and close the door.

Similarly, it is also problematic for users to adapt an enclosure to include an opening door without removing an existing wall panel and replacing that panel with a panel that includes a door (an approach that is unnecessarily expensive). Lastly, a problem with existing mesh enclosure doors is that whilst it is usual for a door to be lockable in a closed position, doors typically cannot be locked in an open position thereby raising the potential for an animal to inadvertently close an opened door of the enclosure stopping the animal from entering or exiting the enclosure.

A third aspect of the present invention addresses the issue that whilst it has previously been proposed to provide animal enclosures that are in the form of a geodesic dome, such enclosures are typically manufactured from triangular panels fixed together to form the dome. A drawback with such an approach is that a very large number of panels must be provide to enable the dome to be constructed, thereby adding to manufacturing and assembly costs. Another drawback is that the triangular panels are typically too small to allow for the inclusion of a door in the panel without disrupting the shape of the enclosure (for example, by building a porch into the enclosure).

A fourth aspect of the present invention addresses drawbacks associated with a previously proposed animal enclosure that includes a sidewall that can be opened by means of an up-and-over garage door style mechanism. In particular, whilst the opening sidewall provides for enhanced access to the interior of the enclosure, the sidewall is prone to falling from an open position (where the sidewall is generally parallel to the top wall of the enclosure) to a closed position (where the sidewall is generally perpendicular to the top wall of the enclosure); raising the potential for injury if an animal's paws should get under the falling door.

A fifth aspect of the present invention relates to a novel coupling for connecting a base to a geodesic dome animal enclosure.

A sixth aspect of the present invention relates to a method of assembling an animal enclosure, and a seventh aspect of the present invention relates to a combined hook and keep for an animal enclosure.

Summary

In an embodiment, a first aspect of the present invention provides a device for securing a wire mesh wall to a supporting wall of an animal enclosure, the device comprising: a first body portion configured to define an internal cavity for receiving a wire of said mesh wall, a second body portion laterally connected to said first body portion, said second body portion having an abutment surface configured to lie against the supporting wall of the animal enclosure, a second surface spaced from said abutment surface, and

at least one aperture extending from said second surface to said first surface for receiving a fixing; wherein said second body portion is configured so that a head portion of a fixing is recessed within said second body portion when the fixing is inserted through said aperture and into said supporting wall to fix the mesh wall thereto.

The first body portion may include an entrance to said cavity that is adjacent said abutment surface. The first body portion may be substantially C-shaped. The cavity may widen from said entrance in a direction away from the abutment surface.

The device may comprise a third body portion coupled to said second body portion. The third body portion may define a cavity for receiving a wire of said mesh wall. The third body portion can include an entrance to said third body portion cavity that is adjacent said abutment surface. The third body portion can be substantially C-shaped. The third body portion cavity may widen from said entrance in a direction away from the abutment surface.

In one embodiment, the third body portion cavity is configured so that the application of a lateral force to said wire mesh wall tends to drive a wire received in said third body portion cavity further into said third body portion cavity. The third body portion cavity may be internally curved to form a sloping internal surface on a side of the cavity furthest from the aperture. In one embodiment the third body portion cavity may be substantially parallel to said first body portion cavity so that a said wire of said mesh wall can be fitted into both said first body portion cavity and said third body portion cavity. The third body portion may be spaced from said first body portion in a direction generally orthogonal to a longitudinal axis of said aperture.

In an embodiment, the space defined between said first and third body portions may be configured to be capable of accommodating a wire extending generally perpendicularly from a second wire received in the cavities of said first and third body portions.

Preferably said first body portion cavity is configured so that the application of a lateral force to said wire mesh wall tends to drive a wire received in said first body portion cavity further into said first body portion cavity. The first body portion cavity may be internally curved to form a sloping internal surface on a side of the cavity furthest from the aperture. The abutment surface may be substantially planar. The second surface is preferably smoothly contoured.

The second body portion may include a plurality of apertures extending from said second surface to said first surface, each said aperture being for receiving a fixing, said second body portion being configured so that a head portion of a fixing is recessed within said second body portion when a fixing is inserted through each said aperture and into

said supporting wall to fix the mesh wall thereto.

In another embodiment, a second aspect of the present invention provides a kit of parts for converting a wire mesh wall of an animal enclosure that is without a door into a wire mesh wall that has a door; the kit comprising: a wire mesh door panel sized to cover an opening formed in said wire mesh wall and to extend beyond a periphery of said opening in at least one dimension; at least one coupling attachable to a peripheral wall of said door panel and to a part of said wire mesh wall so as to couple the wire mesh door panel to the wire mesh wall in such a way that said door panel can be moved between a first position where the door panel obstructs the opening and a second position where the door panel does not obstruct the opening; and a two-part door locking mechanism; wherein said door panel carries a first part of said two-part locking mechanism, said first part of said locking mechanism being capable of cooperating with said second part of said locking mechanism to lock the door panel in said first position.

Preferably the said door panel is attachable to a peripheral wall of said wire mesh wall that partly defines the opening.

The two-part locking mechanism may be configured to cooperate with the wire mesh wall to lock the door in said first position. The said two-part locking mechanism may be operable to lock the door in said second position or said first position. Preferably said two-part locking mechanism is configured to cooperate with the wire mesh wall to lock the door in said first position or said second position.

The first part of said locking mechanism may include a first portion that projects through the wire mesh wall when said door is in the first position and a second portion that projects through the wire mesh wall when said door is in the second position.

Preferably the second part of said two-part locking mechanism is configured to cooperate with said first and second portions of said first part of said locking mechanism.

In one embodiment, the second part comprises a shaft and a curved head portion.

In an embodiment, the door panel can be attached to said wire mesh wall either so that said door opens into an interior of said animal enclosure or so that said wire mesh wall opens outwardly of said animal enclosure interior. Preferably the door panel extends beyond a periphery of said opening in more than one dimension.

In an embodiment, the kit may further comprise a plurality of protective elements, each said element being fittable over a portion of said wire mesh wall that defines said opening so as to protect an animal within the enclosure from injury whilst existing the enclosure through the opening. Preferably the protective elements comprise an internal cavity for covering free ends of said wire mesh wall. Preferably the protective elements are configured to engage with said wire mesh wall to resist removal of said elements from

the wall.

In an embodiment, another aspect of the present invention provides a method of adapting a wire mesh wall of an animal enclosure to include a door, the method comprising the steps of: operating a cutting implement to form an opening in the wire mesh wall of the enclosure and utilising the kit described herein to fit the door panel of said kit to the wire mesh wall.

In another embodiment, a further aspect of the invention provides an animal enclosure comprising a geodesic dome, wherein said dome is comprised of a plurality of coupled hexagonal and pentagonal panels. Preferably at least one of the hexagonal or pentagonal panels includes a door for permitting access to the interior of the enclosure. The door may be sized to permit a person to access the interior of the enclosure. Preferably the geodesic dome terminates at a generally circular peripheral wall formed in part by a plurality of trapezium panels coupled to the remaining panels that form the dome.

The enclosure of this embodiment may further comprise a base portion fittable to said circular peripheral wall to catch any detritus from animals in the enclosure. In this embodiment, the enclosure may comprise a plurality of couplings operable to couple said base portion to the geodesic dome.

In another embodiment, a yet further aspect of the invention provides a composite wire-mesh panel for an animal enclosure, the panel comprising a first panel part, a second panel part, a plurality of couplings for connecting an edge of said first panel part to an edge of said second panel part to form a larger composite panel, a reinforcing bar, and a plurality of couplings for connecting said bar to said first panel part and said second panel part to thereby maintain the shape of said composite panel.

Another embodiment of the teachings of the invention provides a composite wire-mesh panel for an animal enclosure, the panel comprising a first panel part, a second panel part, a plurality of couplings for connecting an edge of said first panel part to an edge of said second panel part to form a larger composite panel, a reinforcing bar, and a plurality of couplings for connecting said bar to said first panel part and said second panel part to thereby maintain the shape of said composite panel.

In either embodiment, said bar may comprise a rod and means operable to hinder free passage of the rod through a said coupling. The means for hindering free passage may comprise a shorter arm coupled to said rod so as to extend substantially orthogonally therefrom. The means for hindering free passage may comprise a rod and a pair of ribs, the ribs extending generally orthogonally from the rod. In one arrangement, one said rib extends generally orthogonally from one end of the rod and the other said rib extends generally orthogonally from the other end of the rod.

Another aspect of the present invention provides an animal enclosure comprising a first support wall, a second support wall spaced from said first, and a wire mesh wall supported between said first and second support walls, wherein the wire mesh wall is moveable arcuately outwardly and subsequently inwardly (relative to the support walls) to provide an opening between said first and second support walls, wherein each of said support walls include a guide for guiding movement of said wire mesh wall as said wire mesh wall moves to open said opening, said guides being configured so that once said opening is open said wire mesh wall tends to be retained in that position.

Preferably, the guides are each substantially L-shaped, a first branch of said guide being set at an angle of less than 90 degrees to a second branch of said guide. The guides may be configured so that as a lowermost peripheral edge of wire mesh wall approaches a junction between said first and second branches, the wire mesh wall tends to automatically retract within the enclosure. The wire mesh wall preferably carries a plurality of followers that cooperate with the guides. Each said follower may include a wheel that is configured to run within said guide. The guides may be substantially C-shaped in cross-section.

Preferably, the enclosure further comprises means operable to slow a rate at which said wire mesh wall moves from a position where said opening is open towards a position when the opening is closed. The means for slowing the wall may comprise a damping mechanism. Preferably the damping mechanism is provided within at least one of said guides. The damping mechanism may comprise a biased pad that a said follower impacts as the wire mesh wall moves to close the opening.

Preferably, the enclosure further comprises a locking mechanism operable lock the wire mesh wall in a position where the opening is closed. The locking mechanism is preferably operable to lock the wire mesh wall in a position where the opening is open. Preferably, the locking mechanism is operable with one hand.

Preferably the wire mesh wall is moveable in a manner akin to that of an up-and-over garage door to open and close said opening.

Another aspect of the invention relates to a coupling member for connecting a first wire mesh panel to a second wire mesh panel, wherein the first wire mesh panel includes a door that carries a moveable bolt, the coupling member being attachable to said first wire mesh panel and including: a hook with which a part of said second wire mesh panel can be engaged, and a keep spaced from the hook, the keep being configured to project from the first wire mesh panel so that said bolt can be engaged with the keep to lock the door in said first panel closed.

Preferably, said hook is configured so that said second panel cannot be

disengaged from said first panel when said panels are roughly perpendicular to one another and said second panel extends in an opposite direction to the direction in which the keep projects from the first wire mesh panel.

Preferably the second panel can be pivoted with respect to said first panel when a part of said second panel is engaged with said hook. The first and second panels may interfere to limit the extent to which the second panel can be pivoted with respect to said first panel.

Another aspect of the invention relates to a method of assembling a flat-packed animal enclosure, the method comprising the steps of: forming a support structure by fixing a second wall to a first wall so that the first wall is substantially orthogonal to said second wall, and fixing a third wall to said second wall so that said third and first walls are substantially parallel to thereby form a support structure that is generally C-shaped in cross-section; fitting a fourth wall between said first and third walls so that said fourth wall is substantially parallel to said second wall, said fourth wall including a plurality of hooks at opposite peripheries; hooking fifth and sixth walls to the hooks carried at opposite peripheries of said fourth wall, and pivoting the fifth and sixth walls relative to the fourth wall until the fifth and sixth walls lie between said first and third walls.

Yet another aspect of the invention provides a coupling for connecting a wire mesh panel of an animal enclosure to another component of the enclosure, wherein the coupling is attached to a wire of said wire mesh panel in such a way that the coupling can be pivoted with respect to said wire mesh panel for engagement with said other component, the coupling being configured so that it can also be temporarily engaged with wires of said wire mesh panel to couple the coupling to the panel whilst the other component is aligned to said wire mesh panel. Preferably the coupling is configured to resiliently deform as it is temporarily engaged with wires of said wire mesh panel.

Another embodiment of the invention provides a cuboid animal enclosure having first and second solid parallel walls, a third solid wall fixed between said first and second solid walls so as to be generally orthogonal to each of said first and second walls; a first wire mesh wall fixed by means of a plurality of coupling devices to said first and second walls so as to extend generally orthogonally therebetween and generally in parallel to said second solid wall, and a second wire mesh wall coupled by means of hooks to said first wire mesh wall and by means of coupling devices to each of said first, second and third solid walls. The enclosure may further comprise a third wire mesh wall coupled by means of hooks to said first wire mesh wall and by means of coupling devices to each of said first, second and third solid walls, the third mesh wall extending between said first and second solid walls so as to be generally parallel to said second wire mesh wall.

Other aspect, features and embodiments of the invention are set out in the detailed description provided below.

Brief Description of the Drawings

Various aspects of the teachings of the present invention, and arrangements embodying those teachings, will hereafter be described by way of illustrative example with reference to the accompanying drawings, in which:

Fig. 1 is a schematic representation of a previously proposed P-clip;

Fig. 2 is a schematic representation of a previously proposed lined P-clip;

Fig 3 is a top schematic perspective view of an embodiment of a device for securing a wire mesh wall to a supporting wall of an animal enclosure;

Fig. 4 is an underneath perspective view of the device depicted in Fig. 3;

Fig. 5 is a side elevation of the device depicted in Fig. 3;

Fig. 6 is a schematic cross-sectional view of the device along the line A—A in Fig. 3;

Fig. 7 is a top plan view of alternative ways of utilising the device depicted in Figs. 3 to 6;

Fig. 8 is a top plan view of a mesh door panel;

Fig. 9 is a perspective view of the panel shown in Fig. 8;

Fig. 10 is a side elevation of the panel shown in Figs. 8 and 9;

Figs. 11 and 12 are perspective and side views, respectively, of a detail of the door panel shown in Figs. 8 to 10;

Figs. 13 to 16 are top plan views of a mesh door panel in various stages of opening and closing;

Fig. 17 is a schematic representation of a mesh door panel in an open configuration;

Fig. 18 is a schematic cross-sectional view of an edge protector along the line B—B of Fig, 17;

Fig. 19 is a schematic perspective view of a geodesic enclosure according to one embodiment of the invention;

Fig. 20 is a schematic perspective view of a geodesic enclosure according to another embodiment of the invention;

Fig. 21 is an exploded schematic view of part of a pentagonal enclosure panel;

Fig. 22 is an assembled view of the panel shown in Fig. 21;

Fig. 23 is a schematic view of the panel shown in Fig. 22 in a part folded configuration;

Fig. 24 is a schematic view of part of a hexagonal enclosure panel;

Fig. 25 is a schematic view of the panel shown in Fig. 24 in a part-folded configuration;

Fig. 26 is a schematic view of a support bar;

Fig. 27 is a schematic view of a hexagonal panel with the support bar of Fig. 26 installed;

Fig. 28 is a schematic view of another support bar;

Fig. 29 is a schematic view of a hexagonal panel with the support bar of Fig. 28 installed;

Fig. 30 is a schematic perspective view of an animal enclosure with a mesh sidewall in a closed position;

Figs. 31 and 32 are schematic perspective views of the animal enclosure of Fig. 30 with the mesh sidewall progressively more open;

Fig. 33 is a schematic perspective view of the animal enclosure of Fig. 30 with the mesh sidewall fully open;

Fig. 34 is a front elevation of the mesh sidewall of the enclosure of Figs. 30 to 33;

Figs. 35 to 38 are schematic cut-away views of the animal enclosure in the positions depicted in Figs. 30 to 33, respectively;

Fig. 39 is an enlarged view of a region of the enclosure labelled C in Fig. 38;

Fig. 40 is a schematic view of a partly assembled supporting structure for an animal enclosure;

Figs. 41 to 43 show various stages of an animal enclosure assembly process;

Fig. 44 is a schematic enlarged view of part of the enclosure labelled D in Fig. 43;

Figs. 45 and 46 are different perspective views of a combined keep and hook component shown in Fig. 44;

Figs. 47 to 49 are schematic views of another animal enclosure; and

Figs. 50 and 51 are enlarged views of part of the enclosure shown in Figs. 48 and 49, respectively.

Detailed Description

Referring now to Figs. 3 and 4 of the drawings, there is depicted a top schematic perspective view of an embodiment of a device 1 for securing a wire mesh wall to a supporting wall of an animal enclosure.

The device 1 comprises a first body portion 3 that defines a cavity 5 for receiving a wire of the mesh wall of an animal enclosure. The first body portion is laterally connected to a second body portion 7 that comprises an abutment surface 9 (shown in Fig. 4) that

lies against a supporting wall of the animal enclosure when the device is in use and secured to that wall.

The second body portion 7 also comprises a second surface 11 that is spaced from the abutment surface 9. Referring additionally to Fig. 6, an aperture 13 extends from the second surface through the second body portion 7 to the abutment surface 9, and is sized to accommodate a fixing 15 (for example a screw) for coupling the device 1 to a supporting wall 17 of the enclosure. As shown in Figs. 3 and 6, the entrance to the aperture 13 in the aforementioned second surface is enlarged (as compared with the remainder of the aperture) so that the head of the fixing 15 used to fix the device 1 to the supporting wall 17 lies at least flush with, and preferably slightly below, the second surface 11 of the second body portion 7. An advantage of this arrangement is that burying the head of the fixing within the body portion greatly reduces the likelihood of an animal within the enclosure hurting itself on an exposed fixing.

In the particular embodiment shown in Figs. 1 to 7, the second portion comprises two apertures that are each suitable receiving a fixing. It will be appreciated, however, that the second body portion 7 may include a single aperture or more than two apertures, if desired having due regard to the size of the animal that is to be housed in the enclosure. Similarly, whilst the abutment surface is shown as being thinned in places, this is not essential, and the abutment surface could instead comprise a continuous planar surface.

Referring now to Fig. 5, in the preferred embodiment the first body portion 3 is generally C-shaped in cross-section so as to define a cavity 5 that widens from an entrance adjacent the abutment surface towards the interior of the first body portion 3 (i.e. in a direction generally away from the supporting surface to which the device is fixed in use). In addition, the cavity is slightly irregularly internally curved to form a sloping internal surface 19 on a side of the cavity furthest from the aperture 13, whereas the opposite internal surface 21 is substantially orthogonal to the abutment surface 9.

An advantage of such an arrangement, as compared with a smoothly curved (e.g. hemi-spherical) internal cavity surface, for example, is that if an animal should apply a force in an outward direction F (Fig. 6) on a mesh wall of the enclosure, then a portion 23 of that wall that is captured within the cavity is encouraged by the sloping internal surface 19 to move further into the cavity 5 in a direction T, instead of in a direction S towards the point where the first body portion meets the supporting surface. This arrangement reduces the potential for an animal within the enclosure to force the captured portion 23 of the mesh wall out from under the first body portion.

In a particularly preferred implementation of this aspect of the invention, the device further comprises a third body portion 25 coupled to the second body portion 7, and

spaced from the first body portion 3 in a direction generally orthogonal to a longitudinal axis of said aperture. The third body portion 3 is substantially the same shape as the first body portion, and also defines an internal cavity 27 for receiving a wire of the mesh wall, the internal cavities of the third and first body portions being (at least substantially) linearly aligned with one another so that a said wire of said mesh wall can be fitted into both said first body portion cavity and said third body portion cavity. The internal cavity 27 of the third body portion 25 is substantially identically shaped to the cavity 5 of the first body portion.

Spacing the first and third body portions 3, 25 from one another provides a recess 29 for accommodating a wire of the mesh wall that extends generally orthogonally from the wire 23 received in the internal cavities 5, 27. As shown in Fig. 7, an advantage of the device herein described is that it can be fitted to the wire mesh wall either so that the first and third portions lie either side of a wire 31 in the recess 29, or between adjacent wires 33 of the mesh wall. This arrangement enhances the versatility of the device, and thus simplifies the enclosure assembly process.

Whilst in the preferred embodiment depicted in the drawings the device has first, second and third body portions, it will be appreciated and should be noted that a device with only first and second body portions is advantageous and within the scope of the present invention. Similarly, it is within the scope of the present invention to extend the second body portion and couple a further body portion or portions (substantially identical to the first and third body portions) to the second body portion, that further body portion or portions being spaced from adjacent body portions.

It is also envisaged for the third body portion to be coupled to the second body portion so that the respective cavities are not linearly aligned and instead are set at an angle to one another. Such a device would be useful for coupling a corner or bend region of a mesh wall to a supporting surface.

In the preferred arrangement, the device is of a material that will not harm an animal if it should inadvertently be ingested. For example, the device may be of a plastics material. The device may be moulded, for example injection moulded, or formed in any other way.

Referring now to Figs. 8 to 12, there are depicted various components of a kit of parts for converting a wire mesh wall of an animal enclosure that is without a door into a wire mesh wall that has a door. The kit comprises a wire mesh door 35 (shown in plan view in Fig. 8, in perspective in Fig. 9 and in a side elevation in Fig. 10), and at least one coupling 37 (Fig. 17) for connecting the door to a wire mesh wall 39.

The coupling 37, in a preferred embodiment, comprises a plastic or elastomeric C-

shaped clip that can be pushed over a peripheral wall of the door 35 and a part of the wire mesh wall to couple the door to the wall. One or both of the free ends of the clip may be inwardly barbed to resist removal of the clip (and hence door) from the wall.

Fig. 13 is a plan view of the door 35 locked in a position where it obscures an opening 41 that has been cut into the wire wall 39. Fig. 14 is a plan view of the door 35 in a position where the door 35 has been partly opened, and Fig. 15 is a plan view of the door 35 in a position where the opening 41 is fully open and the door is unlocked. Fig. 16 is a plan view of the door 35 locked in a fully open position.

As shown in Figs. 13 to 17, the wire mesh door panel 35 is sized to cover an opening 41 formed in the wire mesh wall 39 and to extend beyond a periphery 40 of said opening in at least one dimension, in the preferred embodiment depicted in Figs 13 to 17 laterally of the couplings 37 that attach the door 35 to the wire mesh wall 39.

As shown in Figs 13 to 16, the couplings 37 can be attached to a peripheral wall of said door panel and to a peripheral part of said wire mesh wall that partly defines the opening so as to couple the wire mesh door panel to the wire mesh wall in such a way that said door panel can be moved between a first position (shown in Fig. 13) where the door panel obstructs the opening (and extends laterally beyond the periphery 40 of the opening) and a second position where the door panel does not obstruct the opening. Alternatively, as shown in Fig. 17, the couplings can be attached to a peripheral wall of the door panel and to a part of the wire mesh wall close to the aperture.

The kit further comprises a two-part door locking mechanism, a first part 43 of which is carried by the door (for example, by means of having been welded or otherwise affixed to the door) and a separate second part 45 (best illustrated in Fig. 17) that has a shape akin to that of a shepherd's crook having a shaft 44 and a curved head portion 46. In the preferred arrangement, the door carries two first parts 43 and the second part 45 engages with both of those first parts to lock the door to the cage. In other embodiments, a larger or smaller number of first parts may be carried by the door 35.

Referring now to Figs. 11 and 12, the first part 43 is formed from a pair of generally parallel wires 47, 49 that are coupled to one another at one end by a first hoop 51, and at the other end by a second hoop 53. The hoops extend roughly orthogonally from the parallel wires 47, 49 so that the first hoop extends from the wires in an opposite direction to the second hoop. The effect of this arrangement is that when the first part(s) is affixed to the door, the first and second hoops extend generally orthogonally from respective faces of the door. As a consequence, the first and second hoops project through the wire mesh wall when the door is in the open position (shown in Fig. 16) and the closed position (shown in Fig. 13), and as such the door can be locked open or closed (as desired) by

threading the shaft 44 of the second part through the projecting hoops 51 or 53 until an upper one of the hoops (if, as depicted, more than one first part is coupled to the door) is captured within the curved head portion 46 of the second part. An advantage of this arrangement is that as the door can be locked open, an animal within the enclosure cannot accidentally close the door to obscure the opening 41.

As aforementioned, the opening 41 is typically formed by using a pair of wire cutters to cut out a section of the wire wall 39. In so doing, free ends comprising a short length of wire will inevitably be left, and those free ends could potentially harm an animal using the opening to leave or enter a cage. To address this issue, the kit may further comprise an edge protector 55 of the type depicted in Figs. 17 and 18 (Fig. 18 being a cross-sectional view of an edge protector along the line B—B of Fig. 17). The edge protector 55 comprises a length of (typically plastic or elastomeric, so it can be cut to size) material that is generally U-shaped in cross-section, thereby defining an internal cavity 57. A free end 59 of the U-shaped material extends at an inward angle into the cavity 57 so as to form a barb that abuts against a part 61 (in this instance an upright part) of the wire mesh wall, whilst a wire free end 63 (created when the opening 41 was cut into the wall) is enclosed within the cavity.

As will be appreciated by persons of ordinary skill in the art, when the inwardly angled free end 59 of the edge protector is pressed against the upright (in this instance) part 61 of the wire mesh wall, the U-shaped edge protector deforms outwardly until the upright part 61 can pass into the cavity 57, whereupon the edge protector returns at least substantially to its original shape. In this position, removal of the edge protector is obstructed by virtue of the upright part bearing upon an inside wall of the inwardly angled free end 59 of the edge protector.

Referring now to Figs. 19 and 20 of the accompanying drawings, there is depicted an animal enclosure 65 in accordance with another aspect of the present invention. As depicted, the enclosure comprises a geodesic dome that is formed from a plurality of discrete wire mesh panels that are then coupled together. In this embodiment, unlike previously proposed geodesic domes, the panels from which the dome is constructed include a plurality of hexagonal panels 67 and pentagonal panels 69.

This configuration provides a number of distinct advantages. Firstly, by using hexagonal and pentagonal panels instead of triangular panels, the total number of panels required to form the dome is greatly reduced. As a consequence, manufacturing costs and assembly time are greatly reduced. In addition, as individual panels are substantially larger, it is now possible to include a door 71 in one or more of the hexagonal panels – something that was impossible with domes formed from triangular panels.

The enclosure depicted in Fig. 19 is roughly two metres in height, and the enclosure depicted in Fig. 20 is roughly one metre high. In both instances, the door 71 is sufficiently large to permit a person to climb into the enclosure.

As depicted, in each case the geodesic dome terminates at a generally circular peripheral wall that is formed in part by a plurality of trapezoidal panels 72 coupled to the remaining panels that form the dome.

Referring now to Figs. 21 to 29 of the accompanying drawings, in a particularly preferred implementation of the teachings of the invention, the aforementioned hexagonal and pentagonal panels for the geodesic dome of Figs. 19 and 20 may be formed from smaller panels that are coupled together to form the larger hexagonal and pentagonal panels. An advantage of this arrangement is that the disassembled panels are much easier (and hence cheaper) to transport than the larger panels used in the domes.

In the particular example depicted in Figs. 21 to 23, the pentagonal panel may be formed by coupling together a first triangular panel 73 and a six-sided second panel 75. In other embodiments, the pentagonal panel could be otherwise divided (for example, vertically downwards in the orientation depicted in Fig. 21 into two four-sided panels). In the particular example depicted in Figs. 24, 25, 27 and 29, the hexagonal panel may be formed by coupling together two identically shaped five-sided panels 79. As with the pentagonal panel, it will be appreciated that the hexagonal panel could be otherwise divided (for example, into a five-sided panel and a triangular panel). The panels 73, 75, 79 are coupled together by a plurality of couplings 77, for example a coupling 37 of the type depicted in Fig. 17 and described above. Other alternative couplings will be immediately apparent to persons of ordinary skill in the art.

As shown in Figs. 23 and 25, the hexagonal and pentagonal panel parts – once coupled together – can be moved relative to one another. To arrest this movement, the panel further comprises a reinforcing bar 81, 83, for example of the type depicted in Figs. 26 or 28.

Referring now to Fig. 26, the reinforcing bar 81 in this instance comprises a rod 85 that has a smaller arm 87 fixed to it so that the arm extends generally orthogonally to the rod 85. In the particular embodiment depicted in Fig. 26, the arm 87 is fixed to the centre of the rod, but it will be appreciated that it need not be centred on the rod 85. As shown in Fig. 27, the rod is fixed by a plurality of couplings 89 to each of the two panels so that the rod lies roughly orthogonal to the adjacent edges of the two panels 79. Respective ends of the smaller arm 87 are also clipped to the panels to hinder free passage of the rod through a coupling. As will be appreciated, once the reinforcing bar has been clipped to the panels, the panels can no longer move with respect to one another.

Fig. 28 illustrates another type of reinforcing bar 83. In this instance the bar 83 comprises a rod 91 that has a transversely extending rib 93 provided at each end. In this instance the ribs 93 are at respective ends of the rod 91, but it will be appreciated that they need not be at the ends of the rod. It will also be appreciated that they need not extend in the same direction from the rod as depicted. The bar would function adequately if the ribs were to extend in opposite directions from the rod. Fig. 29 illustrates how the rod functions is coupled to the panels 79 to resist relative moment of those panels.

Although not shown in the drawings, it will be appreciated by persons skilled in the art that the aforementioned pentagonal panels 69 also include reinforcing bars such as those depicted in Figs. 26 and 28 to resist relative movement of the two panels 73, 75 that make up the pentagonal panel 69.

Referring now to Figs. 30 to 39 of the drawings, there is depicted an animal enclosure 95 according to another embodiment of the present invention. In this instance the enclosure comprises a frame 97 that is rectangular in cross-section. The frame 97 defines a hollow interior for accommodating an animal, access to which is closed by an opening wire wall 99. The opposing wall 101 (visible in Figs. 32 and 33) may also constitute a wire wall, or alternatively may be configured as a solid wall.

The opening wall 99 is configured as a garage-door style "up and over" opening door, and comprises – as shown in Fig. 34 – a peripheral frame 103, a wire wall 105 with a secondary door 107. One long wall of the frame (the lower wall in use) includes a manually operable locking mechanism 109, and each side wall includes two runners – a first 111 substantially half-way up the side wall and a second 113 towards the top of the side wall. The runners each comprise a peg extending laterally from the sidewall upon which a rotatable wheel is mounted.

The locking mechanism 109 comprises a pair of rods 115 mounted within the lower wall that are biased (for example, spring biased) to extend laterally from the sidewalls of the frame 103 to engage with respective keeps in the enclosure frame 97. The rods can be retracted into the lower wall of the frame 103 to unlock the door by pinching together a pair of knobs 117. Advantageously, the locking mechanism is configured so that a user can operate the locking mechanism with one hand.

Referring now to Figs. 31 to 33 and 35 to 38, each sidewall 119 of the enclosure frame 97 includes a substantially L-shaped track 121 in which the aforementioned wheels of the runners run as the opening wire wall 99 is opened and closed. The track is substantially C-shaped in cross-section, and is configured so that the angle between the first 123 and second 125 branches of the track is less than 90 degrees. An advantage of this configuration is that as the wheels of the first runner approach the top of the first

branch of the track 121, the door 99 tends to retract automatically within the enclosure frame 97. Another advantage is that as the door is inclined towards the floor when fully open (as shown in Figs. 33 and 38) gravity tends to hold the door open, and as a result slight accidental or inadvertent contact with the open door will not tend to cause it to close.

In a particularly preferred arrangement, keeps may be provided within the guides towards the junction between the first and second branches of the guides to enable the opening wall to be locked open, and also towards a base of the enclosure to enable the opening wall to be locked close. The keeps may simply comprise a recess with which with free ends of the rods within the lower wall can engage.

As will be appreciated from Figs. 33 to 38, as the door opens it moves arcuately outwardly and subsequently inwardly relative to the sidewalls 119 of the enclosure 97 in a similar way to the movement of an up-and-over style garage door.

Referring now to Figs. 38 and 39 of the drawings, a lower portion of the first branch 123 of one or both of the tracks 121 includes a damping mechanism 127 that is designed to slow the door 99 as it approaches the closed position, thereby lessening the chance of the closing door damaging the paws of an animal within the enclosure.

The damping mechanism includes a catch pad 129 against which the first wheel of the runner abuts. The catch pad is mounted on a rod 131 that is biased to extend from a housing 133 that the rod can be driven into by the closing door. The bias is provided within the housing 133 and may comprise a spring, for example.

As will be appreciated by persons skilled in the art, when the door moves towards the fully closed position shown in Fig. 35 the wheel of the first runner 111 abuts against the catch pad 129 and the weight of the door drives the catch pad, against the bias, towards the housing until the rod is retracted within the housing 133.

Advantageously, by housing the damping mechanism within the track, the potential for the damping mechanism being damaged by an animal within the enclosure is reduced.

Referring now to Fig. 40, there is depicted a schematic view of a supporting structure for an animal enclosure according to another embodiment of the invention. The supporting structure is shown on its side and comprises a first wall 135 (that will form the top wall of the enclosure when it is fully assembled), a second wall 137 (that will form one sidewall of the enclosure when it is fully assembled) and a third wall 139 (that will form the base wall of the enclosure when it is fully assembled). The third wall 139 is mounted on a decorative plinth 141.

Once the aforementioned walls have been coupled together with appropriate fixings the user has a generally C-shaped supporting structure. A first step in the assembly process depicted in Fig. 41 is to fix a wire mesh sidewall 143 between the first

and third walls 135, 139. In a preferred implementation, the wire mesh sidewall may be fixed to the aforementioned walls by means of fixings of the type shown in Figs. 3 to 7 and described above.

A first peripheral free edge 145 of the sidewall 143 includes a two combined hook and keeps 147 and a central hook 149. An opposite second peripheral free edge 151 includes three hooks 149. The combined hook and keep is shown in more detail in Figs. 45 and 46 of the drawings and will later be described in detail.

Referring now to Fig. 42, once the sidewall 143 has been affixed to the first and third walls 135, 139 the enclosure can be rotated to stand on the plinth 141, and a peripheral edge of a second wire mesh wall 153 can be inserted into the central hook 149 and the hook part of the combined hooks and keeps 147. The second wire mesh wall 153 can then be pivoted in the direction 155 until it also lies between the first and third walls 135, 139, whereupon the second wire mesh wall can be fixed to those walls – for example by means of fixings of the type shown in Figs. 3 to 7 – as shown in Fig. 43. The process can then be repeated for a third wire mesh wall (not shown) that is engaged with the three hooks 149 on the second peripheral free edge 151 of the wire mesh sidewall 143 to complete the enclosure.

Referring to Figs. 44 to 46, the combined hook and keep 147 comprises a pair of substantially parallel wires 157 that are coupled together at adjacent first ends by means of a generally semi-circular hoop 157 that extends substantially orthogonally from the parallel wires 157 to form a keep for a bolt 159 of a locking mechanism 161 that is operable to lock a door 163 in the sidewall 143 closed by moving the bolt until an end of the bolt lies within the hoop 157.

The opposite adjacent second ends of the wires 157 are coupled to short sections of wire 165 that extend substantially orthogonally to the parallel wires 157, and the short sections are coupled together by a further hoop 167 that extends substantially orthogonally from the short wire sections 165 towards the semi-circular hoop 157 to form a hook into which the aforementioned peripheral edge 169 of the second wire mesh wall 153 can be fitted.

Referring now to Figs. 47 to 49 of the drawings, there is depicted another embodiment of geodesic dome animal enclosure that is configured to be hung from a support surface, and is particularly suitable for housing small birds. As shown, the enclosure 171 is also formed from a plurality of hexagonal 173 and pentagonal 175 panels, but in this instance as the panels are smaller they need not be broken down into smaller panels as depicted in Figs. 21 to 29 of the drawings (although, of course, they could be if so desired). As with the previously disclosed geodesic domes, the geodesic dome

terminates at a generally circular peripheral wall 177 that is formed in part by a plurality of trapezoidal panels 179 coupled to the remaining panels that form the dome.

In this embodiment, the geodesic dome also includes a base portion 181 that is configured to be coupled to the generally circular peripheral wall 177 by a plurality of couplings 183. The base portion 181 catches any detritus from the animals inside the enclosure and can be removed from the remainder of the dome for cleaning.

Fig. 47 shows the dome with the couplings hanging downwards beyond the peripheral wall 177 of the dome, and in this position they can tend to interfere with the base portion 181 when a user attempts to recouple the base portion 181 to the remainder of the dome. To facilitate proper alignment of the base portion with the peripheral wall of the dome, the couplings 183 are each configured so that they can be engaged with generally parallel wires of the wire mesh walls of the dome, as shown in Fig. 48.

In this position the base portion can readily be aligned with the remainder of the dome, following which the couplings can be disengaged from the wire mesh walls and then engaged with the base portion to couple the base portion to the remainder of the dome, as shown in Fig. 49.

Referring now to Figs. 50 and 51, the couplings 183 are each formed from a length of wire and comprise a pair of hooks 185 that are configured to couple to a horizontal bar 187 that is coupled to mesh panels (in this instance one of the trapezoidal panels) of the dome enclosure. A curved wire portion extends 189 outwardly from each said hook 185 and terminates in a shorter wire portion 191 (only one of which is visible in Fig. 50) extending substantially orthogonally from each curved wire portion 189. The shorter wire portions 191 are coupled to either end of a hoop 193 that extends roughly orthogonally from the shorter wire portions in a direction away from the hooks 185.

As will be appreciated, the shorter wire sections form a "step" that can be fitted under a ledge 195 formed in the base portion 181, as shown in Fig. 51, to couple the base portion 181 to the remainder of the enclosure. As the couplings are moved from the position shown in Fig. 51 to the position shown in Fig. 50, the curved wire portions move against spaced parallel wires of the wire mesh panel and into the interior of the enclosure. In this position, the wires exert an outward force on the spaced parallel walls of the wire mesh panel that holds the couplings in the position shown in Fig. 50, thereby facilitating alignment of the base portion 181 with the remainder of the enclosure.

Whilst in this particular embodiment the couplings are used to couple a base portion to a geodesic dome, it will be appreciated by persons of ordinary skill in the art that like couplings could be used to couple parts of any type of wire mesh animal enclosure together, not solely a geodesic dome.

It will be appreciated that whilst various aspects and embodiments of the present invention have heretofore been described, the scope of the present invention is not limited to the particular arrangements set out herein and instead extends to encompass all arrangements, and modifications and alterations thereto, which fall within the scope of the appended claims. For example, whilst in the embodiments disclosed about a door is provided in a hexagonal panel of the geodesic dome, it will be appreciated that a slightly smaller door could instead be provided in a pentagonal panel of the geodesic dome. Similarly, whilst the foregoing description outlines the concept of creating hexagonal and pentagonal panels from a plurality of smaller panels, it will be appreciated by persons of ordinary skill in the art that the principles of this aspect of the invention could be applied to different shaped panels (for example, square or rectangular panels).

It should also be noted that whilst the accompanying claims set out particular combinations of features described herein, the scope of the present invention is not limited to the particular combinations hereafter claimed, but instead extends to encompass any combination of features herein disclosed.

Finally, it should be noted that any element in a claim that does not explicitly state "means for" performing a specified function, or "steps for" performing a specific function, is not to be interpreted as a "means" or "step" clause as specified in 35 U.S.C. Sec. 112, par. 6. In particular, the use of "step of" in the claims appended hereto is not intended to invoke the provisions of 35 U.S.C. Sec. 112, par. 6.

Additional aspects of the invention and preferred features of those aspects are set out in the following numbered paragraphs:

1. A device for securing a wire mesh wall to a supporting wall of an animal enclosure, the device comprising:

a first body portion configured to define an internal cavity for receiving a wire of said mesh wall,

a second body portion laterally connected to said first body portion, said second body portion having an abutment surface configured to lie against the supporting wall of the animal enclosure, a second surface spaced from said abutment surface, and at least one aperture extending from said second surface to said first surface for receiving a fixing;

wherein said second body portion is configured so that a head portion of a fixing is recessed within said second body portion when the fixing is inserted through said aperture and into said supporting wall to fix the mesh wall thereto.

2. A device according to Paragraph 1, wherein said first body portion includes an entrance to said cavity that is adjacent said abutment surface.

3. A device according to Paragraph 2, wherein said first body portion is substantially C-shaped.

4. A device according to Paragraph 2 or 3, wherein the cavity widens from said entrance in a direction away from the abutment surface.

5. A device according to any preceding paragraph comprising a third body portion coupled to said second body portion.

6. A device according to Paragraph 5 or 6, wherein said third body portion defines a cavity for receiving a wire of said mesh wall.

7. A device according to Paragraph 6, wherein said third body portion includes an entrance to said third body portion cavity that is adjacent said abutment surface.

8. A device according to Paragraph 7, wherein said third body portion is substantially C-shaped.

9. A device according to Paragraph 7 or 8, wherein the third body portion cavity widens from said entrance in a direction away from the abutment surface.

10. A device according to any of Paragraphs 6 to 9, wherein said third body portion cavity is configured so that the application of a lateral force to said wire mesh wall tends to drive a wire received in said third body portion cavity further into said third body portion cavity.

11. A device according to Paragraph 10, wherein the third body portion cavity is internally curved to form a sloping internal surface on a side of the cavity furthest from the aperture.

12. A device according to any of Paragraphs 6 to 11, wherein said third body portion cavity is substantially parallel to said first body portion cavity so that a said wire of said mesh wall can be fitted into both said first body portion cavity and said third body portion

cavity.

13. A device according to Paragraph 12, wherein said third body portion is spaced from said first body portion in a direction generally orthogonal to a longitudinal axis of said aperture.

14. A device according to Paragraph 13, wherein the space defined between said first and third body portions is configured to be capable of accommodating a wire extending generally perpendicularly from a second wire received in the cavities of said first and third body portions.

15. A device according to any preceding paragraph, wherein said first body portion cavity is configured so that the application of a lateral force to said wire mesh wall tends to drive a wire received in said first body portion cavity further into said first body portion cavity.

16. A device according to Paragraph 12, wherein the first body portion cavity is internally curved to form a sloping internal surface on a side of the cavity furthest from the aperture.

17. A device according to any preceding paragraph, wherein said abutment surface is substantially planar.

18. A device according to any preceding paragraph, wherein said second surface is smoothly contoured.

19. A device according to any preceding paragraph, wherein said second body portion includes a plurality of apertures extending from said second surface to said first surface, each said aperture being for receiving a fixing, said second body portion being configured so that a head portion of a fixing is recessed within said second body portion when a fixing is inserted through each said aperture and into said supporting wall to fix the mesh wall thereto.

20. A device for securing a wire mesh wall to a supporting wall of an animal enclosure, the device being substantially as hereinbefore described with reference to Figs. 3 to 7 of the accompanying drawings.

21. A kit of parts for converting a wire mesh wall of an animal enclosure that is without a door into a wire mesh wall that has a door; the kit comprising:

a wire mesh door panel sized to cover an opening formed in said wire mesh wall and to extend beyond a periphery of said opening in at least one dimension;

at least one coupling attachable to a peripheral wall of said door panel and to a part of said wire mesh wall so as to couple the wire mesh door panel to the wire mesh wall in such a way that said door panel can be moved between a first position where the door panel obstructs the opening and a second position where the door panel does not obstruct the opening; and

a two-part door locking mechanism;

wherein said door panel carries a first part of said two-part locking mechanism, said first part of said locking mechanism being capable of cooperating with said second part of said locking mechanism to lock the door panel in said first position.

22. A kit according to Paragraph 21, wherein said door panel is attachable to a peripheral wall of said wire mesh wall that partly defines the opening.

23. A kit according to Paragraph 21 or 22, wherein said two-part locking mechanism is configured to cooperate with the wire mesh wall to lock the door in said first position.

24. A kit according to any of paragraphs 21 to 23, wherein said two-part locking mechanism is operable to lock the door in said second position or said first position.

25. A kit according to Paragraph 24, wherein said two-part locking mechanism is configured to cooperate with the wire mesh wall to lock the door in said first position or said second position.

26. A kit according to any of paragraphs 21 to 25, wherein said first part of said locking mechanism includes a first portion that projects through the wire mesh wall when said door is in the first position and a second portion that projects through the wire mesh wall when said door is in the second position.

27. A kit according to any of Paragraph 26, wherein the second part of said two-part locking mechanism is configured to cooperate with said first and second portions of said first part of said locking mechanism.

28. A kit according to Paragraph 27, wherein said second part comprises a shaft and a curved head portion.

29. A kit according to any of paragraphs 21 to 28, wherein said door panel can be attached to said wire mesh wall either so that said door opens into an interior of said animal enclosure or so that said wire mesh wall opens outwardly of said animal enclosure interior.

30. A kit according to any of Paragraphs 21 to 29, wherein the door panel extends beyond a periphery of said opening in more than one dimension.

31. A kit according to any of Paragraphs 21 to 30, comprising a plurality of protective elements, each said element being fittable over a portion of said wire mesh wall that defines said opening so as to protect an animal within the enclosure from injury whilst existing the enclosure through the opening.

32. A kit according to Paragraph 31, wherein said protective elements comprise an internal cavity for covering free ends of said wire mesh wall.

33. A kit according to Paragraph 32, wherein said protective elements are configured to engage with said wire mesh wall to resist removal of said elements from the wall.

34. A method of adapting a wire mesh wall of an animal enclosure to include a door, the method comprising the steps of:

operating a cutting implement to form an opening in the wire mesh wall of the enclosure and

utilising the kit of any of paragraphs 21 to 33 to fit the door panel of said kit to the wire mesh wall.

35. A kit substantially as hereinbefore described with reference to Figs. 8 to 18 of the accompanying drawings.

36. An animal enclosure comprising a geodesic dome, wherein said dome is comprised of a plurality of coupled hexagonal and pentagonal panels.

37. An animal enclosure according to Paragraph 36, wherein at least one of the

hexagonal or pentagonal panels includes a door for permitting access to the interior of the enclosure.

38. An animal enclosure according to Paragraph 37, wherein said door is sized to permit a person to access the interior of the enclosure.

39. An animal enclosure according to any of Paragraphs 36 to 38, wherein said geodesic dome terminates at a generally circular peripheral wall formed in part by a plurality of trapezium panels coupled to the remaining panels that form the dome.

40. An animal enclosure according to Paragraph 39, further comprising a base portion fittable to said circular peripheral wall to catch any detritus from animals in the enclosure.

41. An animal enclosure according to Paragraph 40, comprising a plurality of couplings operable to couple said base portion to the geodesic dome.

42. An animal enclosure substantially as hereinbefore described with reference to any of Figs. 19, 20, and 47 to 51.

43. A composite wire-mesh panel for the animal enclosure of any of paragraphs 36 to 41, the panel comprising a first panel part, a second panel part, a plurality of couplings for connecting an edge of said first panel part to an edge of said second panel part to form a larger composite panel, a reinforcing bar, and a plurality of couplings for connecting said bar to said first panel part and said second panel part to thereby maintain the shape of said composite panel.

44. A composite wire-mesh panel for an animal enclosure, the panel comprising a first panel part, a second panel part, a plurality of couplings for connecting an edge of said first panel part to an edge of said second panel part to form a larger composite panel, a reinforcing bar, and a plurality of couplings for connecting said bar to said first panel part and said second panel part to thereby maintain the shape of said composite panel.

45. A composite wire-mesh panel according to Paragraph 43 or 44, wherein said bar comprises a rod and means operable to hinder free passage of the rod through a said coupling.

46. A composite wire-mesh panel according to Paragraph 45, wherein said means for hindering free passage comprises a shorter arm coupled to said rod so as to extend substantially orthogonally therefrom.

47. A composite wire-mesh panel according to Paragraph 45, wherein said means for hindering free passage comprises a rod and a pair of ribs, the ribs extending generally orthogonally from the rod.

48. A composite wire-mesh panel according to Paragraph 47, wherein one said rib extends generally orthogonally from one end of the rod and the other said rib extends generally orthogonally from the other end of the rod.

49. A composite wire-mesh panel substantially as hereinbefore described with reference to Figs. 21 to 29 of the accompanying drawings.

50. An animal enclosure comprising a first support wall, a second support wall spaced from said first, and a wire mesh wall supported between said first and second support walls, wherein the wire mesh wall is moveable arcuately outwardly and subsequently inwardly (relative to the support walls) to provide an opening between said first and second support walls, wherein each of said support walls include a guide for guiding movement of said wire mesh wall as said wire mesh wall moves to open said opening, said guides being configured so that once said opening is open said wire mesh wall tends to be retained in that position.

51. An animal enclosure according to Paragraph 50, wherein said guides are each substantially L-shaped, a first branch of said guide being set at an angle of less than 90 degrees to a second branch of said guide.

52. An animal enclosure according to Paragraph 51, wherein said guides are configured so that as a lowermost peripheral edge of wire mesh wall approaches a junction between said first and second branches, the wire mesh wall tends to automatically retract within the enclosure.

53. An animal enclosure according to Paragraph 51 or 52, wherein said wire mesh wall carries a plurality of followers that cooperate with the guides.

54. An animal enclosure according to Paragraph 53, wherein each said follower includes a wheel that is configured to run within said guide.

55. An animal enclosure according to any of Paragraphs 50 to 54, wherein said guides are substantially C-shaped in cross-section.

56. An animal enclosure according to any of Paragraphs 50 to 55, further comprising means operable to slow a rate at which said wire mesh wall moves from a position where said opening is open towards a position when the opening is closed.

57. An animal enclosure according to Paragraph 56, wherein said means for slowing the wall comprises a damping mechanism.

58. An animal enclosure according to Paragraph 57, wherein said damping mechanism is provided within at least one of said guides.

59. An animal enclosure according to Paragraph 57 or 58 when dependent on Paragraph 53 or 54, wherein said damping mechanism comprises a biased pad that a said follower impacts as the wire mesh wall moves to close the opening.

60. An animal enclosure according to any of paragraphs 50 to 59, further comprising a locking mechanism operable lock the wire mesh wall in a position where the opening is closed.

61. An animal enclosure according to Paragraph 60, wherein said locking mechanism is operable to lock the wire mesh wall in a position where the opening is open.

62. An animal enclosure according to Paragraph 60 or 61, wherein said locking mechanism is operable with one hand.

63. An animal enclosure according to any of paragraphs 50 to 62, wherein said wire mesh wall is moveable in a manner akin to that of an up-and-over garage door to open and close said opening.

64. An animal enclosure substantially as hereinbefore described with reference to Figs. 30 to 39 of the accompanying drawings.

65. A coupling member for connecting a first wire mesh panel to a second wire mesh panel, wherein the first wire mesh panel includes a door that carries a moveable bolt, the coupling member being attachable to said first wire mesh panel and including:

a hook with which a part of said second wire mesh panel can be engaged, and

a keep spaced from the hook, the keep being configured to project from the first wire mesh panel so that said bolt can be engaged with the keep to lock the door in said first panel closed.

66. A coupling member according to Paragraph 65, wherein said hook is configured so that said second panel cannot be disengaged from said first panel when said panels are roughly perpendicular to one another and said second panel extends in an opposite direction to the direction in which the keep projects from the first wire mesh panel.

67. A coupling member according to Paragraph 65 or 66, wherein said second panel can be pivoted with respect to said first panel when a part of said second panel is engaged with said hook.

68. A coupling member according to Paragraph 67, wherein said first and second panels interfere to limit the extent to which the second panel can be pivoted with respect to said first panel.

69. A coupling member substantially as hereinbefore described with reference to Figs. 44 to 46 of the accompanying drawings.

70. A method of assembling a flat-packed animal enclosure, the method comprising the steps of:

forming a support structure by fixing a second wall to a first wall so that the first wall is substantially orthogonal to said second wall, and fixing a third wall to said second wall so that said third and first walls are substantially parallel to thereby form a support structure that is generally C-shaped in cross-section;

fitting a fourth wall between said first and third walls so that said fourth wall is substantially parallel to said second wall, said fourth wall including a plurality of hooks at opposite peripheries;

hooking fifth and sixth walls to the hooks carried at opposite peripheries of said fourth wall, and pivoting the fifth and sixth walls relative to the fourth wall until the fifth and sixth walls lie between said first and third walls.

71. A method of assembling a flat-packed animal enclosure substantially as hereinbefore described with reference to Figs. 40 to 43 of the accompanying drawings.

72. A coupling for connecting a wire mesh panel of an animal enclosure to another component of the enclosure, wherein the coupling is attached to a wire of said wire mesh panel in such a way that the coupling can be pivoted with respect to said wire mesh panel for engagement with said other component, the coupling being configured so that it can also be temporarily engaged with wires of said wire mesh panel to couple the coupling to the panel whilst the other component is aligned to said wire mesh panel.

73. A coupling according to Paragraph 72, wherein said coupling is configured to resiliently deform as it is temporarily engaged with wires of said wire mesh panel.

74. A coupling substantially as hereinbefore described with reference to Figs. 47 to 51 of the accompanying drawings.

CLAIMS

1. A composite wire-mesh panel for an animal enclosure, the panel comprising a first panel part, a second panel part, a plurality of couplings for connecting an edge of said first panel part to an edge of said second panel part to form a larger composite panel, a reinforcing bar, and a plurality of couplings for connecting said bar to said first panel part and said second panel part to thereby maintain the shape of said composite panel.

2. A composite wire-mesh panel according to Claim 1, wherein said bar comprises a rod and means operable to hinder free passage of the rod through a said coupling.

3. A composite wire-mesh panel according to Claim 2, wherein said means for hindering free passage comprises a shorter arm coupled to said rod so as to extend substantially orthogonally therefrom.

4. A composite wire-mesh panel according to Claim 2, wherein said means for hindering free passage comprises a rod and a pair of ribs, the ribs extending generally orthogonally from the rod.

5. A composite wire-mesh panel according to Claim 4, wherein one said rib extends generally orthogonally from one end of the rod and the other said rib extends generally orthogonally from the other end of the rod.

6. An animal enclosure formed from a plurality of coupled wire mesh panels, wherein at least one of said panels comprises a composite wire-mesh panel according to any of Clams 1 to 5.

Intellectual Property Office

Application No:	GB1805500.4	**Examiner:**	Paul Jenkins
Claims searched:	1-6	**Date of search:**	4 October 2018

Patents Act 1977: Search Report under Section 17

Documents considered to be relevant:

Category	Relevant to claims	Identity of document and passage or figure of particular relevance
X	1-6	US5522344 A (DEMURJIAN) see especially figure 1 and column 3 lines 7-38
A	-	GB2491638 A (ANTONELLO) All figures

Categories:

X	Document indicating lack of novelty or inventive step	A	Document indicating technological background and/or state of the art.
Y	Document indicating lack of inventive step if combined with one or more other documents of same category.	P	Document published on or after the declared priority date but before the filing date of this invention.
&	Member of the same patent family	E	Patent document published on or after, but with priority date earlier than, the filing date of this application.

Field of Search:

Search of GB, EP, WO & US patent documents classified in the following areas of the UKC^{X} :

Worldwide search of patent documents classified in the following areas of the IPC

A01K; E04B; E04H

The following online and other databases have been used in the preparation of this search report

EPODOC, WPI

International Classification:

Subclass	Subgroup	Valid From
A01K	0001/02	01/01/2006
E04B	0001/344	01/01/2006