Oct. 29, 1935. M. L. ANDERSON 2,018,909

HINGE

Filed March 10, 1934 2 Sheets-Sheet 1

Fig. 1.

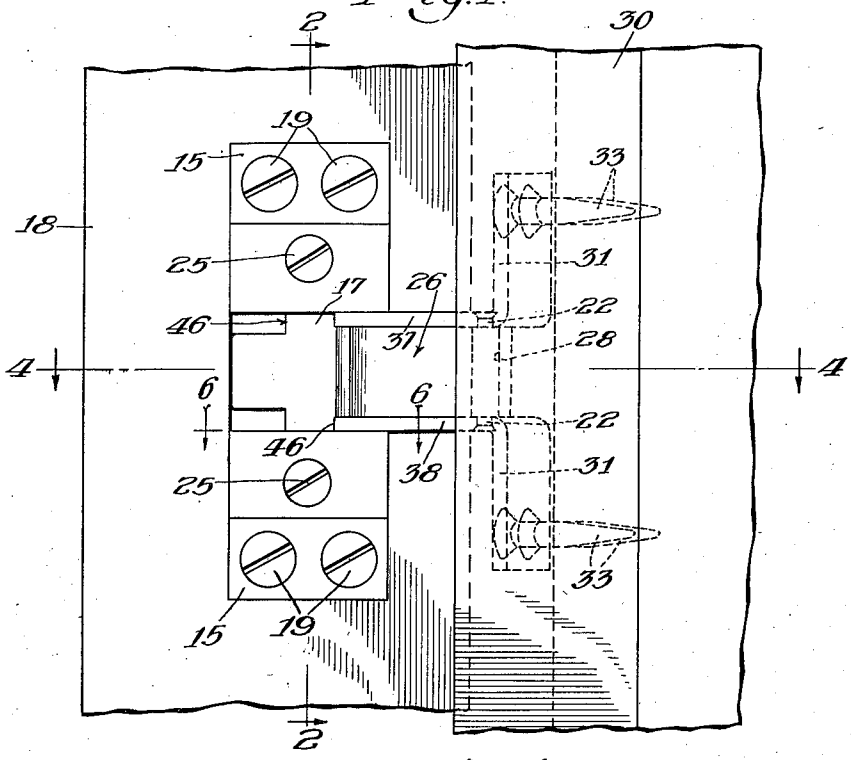

Fig. 2.

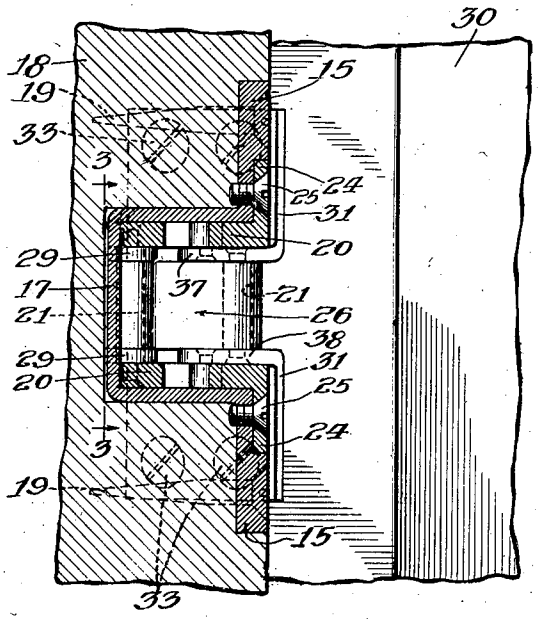

Fig. 3.

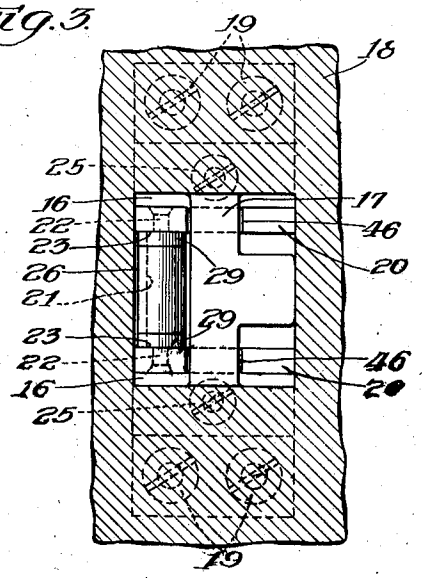

Inventor:
Maud L. Anderson
By: J. E. Jochum Jr.
Attorney.

Oct. 29, 1935. M. L. ANDERSON 2,018,909

HINGE

Filed March 10, 1934 2 Sheets-Sheet 2

Fig. 4.

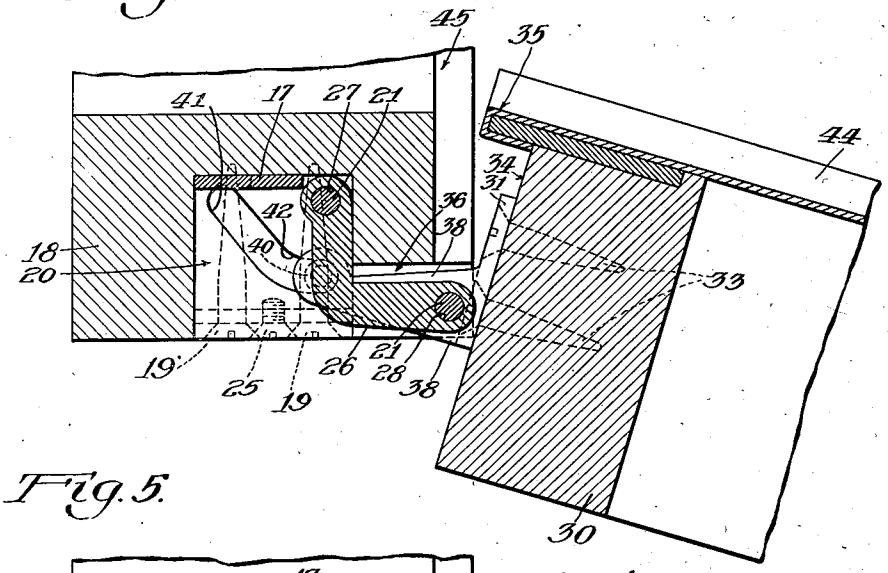

Fig. 5.

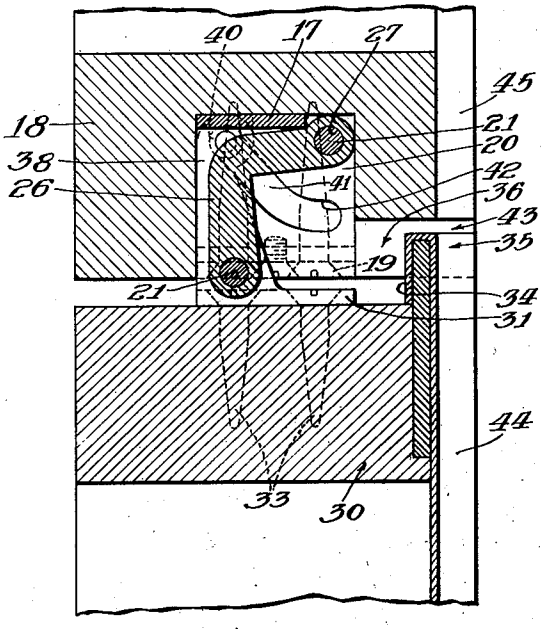

Fig. 6.

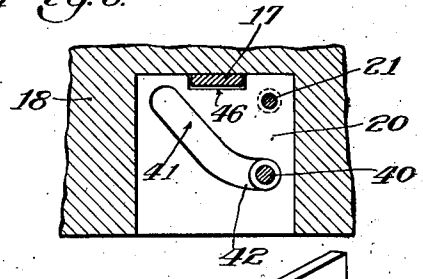

Fig. 7.

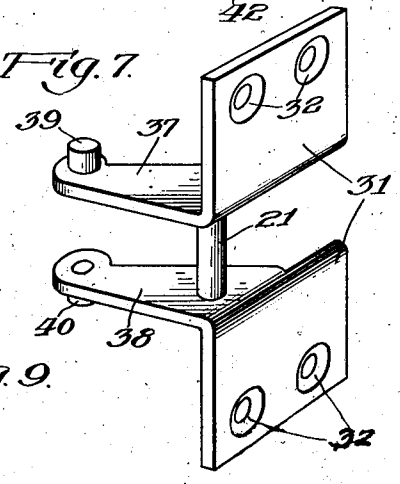

Fig. 8.

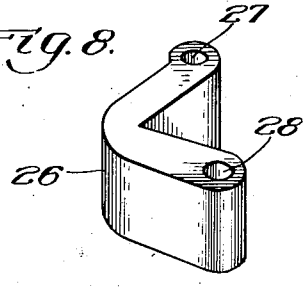

Fig. 9.

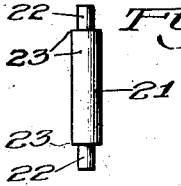

Inventor:
Maud L. Anderson
By:
Attorney:

Patented Oct. 29, 1935

2,018,909

UNITED STATES PATENT OFFICE

2,018,909

HINGE

Maud L. Anderson, Aurora, Ill.

Application March 10, 1934, Serial No. 714,915

6 Claims. (Cl. 16—166)

This invention relates to hinges and more especially to the type known as concealed hinges, particularly adapted, though not necessarily limited in its use, for installations upon automobile doors, and one of the objects of the invention is to provide an improved hinge of this type having a comparatively small depth, necessitating only a shallow cut into the stationary vertical pillar for installation. By reason of the construction and arrangement of the parts of the hinge, a large throw out will be permitted so that a considerable clearance is provided when the door is open, and yet, when the door is closed, the parts of the hinge will fold into a very compact arrangement.

A further object is to provide an improved hinge of this character in which any accordion movement will be prevented, and the elements of the hinge are so arranged that they will co-operate to prevent sagging of the parts, while at the same time all chattering will be eliminated.

A further object is to provide an improved construction of hinge of this character in which the door engaging member will, during the opening movement of the hinge, be first bodily moved away from the pillar engaging member to provide the necessary clearance for a swinging movement, and will be then positively swung about a vertical pivot into an open position.

A further object is to provide an improved hinge of this character which will be simple and compact in construction, durable, and effective and efficient in operation.

To the attainment of these ends and the accomplishment of other new and useful objects as will appear, the invention consists in the features of novelty in substantially the construction, combination and arrangement of the several parts hereinafter more fully described and claimed and shown in the accompanying drawings illustrating this invention and in which

Figure 1 is an elevation of a hinge of this character constructed in accordance with the principles of this invention, showing the same in its applied position and with the door swung open.

Figure 2 is a vertical, sectional view taken on line 2—2, Figure 1.

Figure 3 is a view taken on line 3—3, Figure 2.

Figure 4 is a horizontal sectional view taken on line 4—4, Figure 1.

Figure 5 is a view similar to Figure 4, showing the parts in folded and closed positions.

Figure 6 is a detail sectional view taken on line 6—6, Figure 1.

Figure 7 is a detail perspective view of the door engaging member of the hinge.

Figure 8 is a detail perspective view of the rocker member.

Figure 9 is a detail elevation of one of the pivot members.

Referring more particularly to the drawings, the numeral 15 designates generally a base plate provided with a portion 16 shaped to form a housing and the back wall 17 of the housing is reduced as shown more clearly in Figure 3, for a purpose to be later described.

The base plate thus formed is recessed into a vertical pillar 18 so that the face of the base plate will be flush with the face of the pillar, the base member 15 being secured in position in any suitable manner, such as by means of fastening screws 19.

The numeral 20 designates a carrier member which is provided with a portion to fit within the housing 16 and substantially fills the housing. This carrier member comprises two spaced members connected together by means of a pin or pintle 21, the extremities 22 of which are reduced to form shoulders 23, the reduced portions 22 passing through apertures in the carrier members 20 with the shoulders 23 resting against the inner faces of the carrier members, the extremities 22 being upset so as to secure the parts in position. The carrier member thus formed is provided with flanges 24 recessed into the face of the base plate 15 to be flush therewith, while the remaining portion of the carrier member fits within the housing 16. Fastening screws 25 removably secure the carrier member in position.

The numeral 26 designates generally a rocker member which is substantially curved and preferably somewhat in the formation of an L shaped member provided with openings 27—28, adjacent the respective extremities thereof. One end of the rocker member 26 projects into the carrier member and the pintle 21 passes through the opening 27, washers or spacers 29 being preferably provided between the respective edges of the rocker member and the respective adjacent top and bottom wall of the housing 16 so as to form spaces between the upper and lower edges of the rocker member 26 and the upper and lower walls of the carrier member.

The rocker member 26 is of a length to be folded within the housing and is also adapted to be projected beyond the housing, shown more clearly in Figures 4 and 5.

The numeral 30 designates a door and secured to the door is a door plate or member, preferably

comprising spaced elements 31 provided with openings 32 for the reception of fastening screws 33. The door is cut away or recessed as at 34, so that the elements 31 may be secured to the face of the door and the cut away portion will provide a projection 35 which enters a recess or cut away portion 36 in the pillar 18.

Projecting from the elements 31 of the door engaging member and rigidly secured thereto are spaced arms 37—38 which may be of any desired or suitable length and respectively secured to the extremities of the arms 37—38 are lugs or projections 39—40 arranged perpendicularly to the respective arms.

The elements thus formed are secured together by means of one of the pintles 21, the reduced extremities 22 thereof entering suitable openings in the elements 31 and being secured in any suitable manner.

The arms 38 are vertically spaced from each other for a distance slightly greater than the vertical diameter of the rocker member 26 and the pintle 21 passes through the opening 28 at the outer end of the rocker member.

The arms 37 project into the spaces formed respectively between the upper and lower edges of the rocker member and the respective adjacent upper and lower walls of the carrier member, and the arms are of a thickness to substantially fill such space, so that they will have a riding contact against the upper and lower edges of the rocker member and also against the adjacent walls of the carrier member to assist in maintaining the parts against any sagging movement and also to relieve the pivots of the rocker member from strain.

Arranged in each of the upper and lower walls of the carrier member are slots comprising the portions 41—42 forming guideways, and into which guideways the respective projections or formations 39—40 freely move. The pin and slot connections form guideways for controlling the movement of the door engaging member and while the preferred form of construction is shown for such a sliding connection, it is to be understood that this sliding connection may be formed in any other suitable manner.

The portions 41—42 of the guideway are of different contour so that while the projections 39—40 are moving in the portion 41 of the guideway the door 30 will be given a bodily movement outwardly away from the pillar and a slight swinging or pivotal movement will be imparted to the door during this portion of the movement of the door but, when the projections 39—40 reach the portion 42 of the guideways a positive swinging movement of the door engaging members about the pivot 28 will be imparted to the door so as to swing the door open to provide a considerable clearance of the door with respect to the door opening.

While thus describing the guideway as divided into diffrent portions, it will be understood that the guideway is preformed to control the movement of the door 30 in a prescribed path, which, in the form of my invention disclosed, first directs the door outwardly a sufficient distance to clear proximate abutments and then swings the door about the pillar.

When the door is moved into the position shown in Figure 5, it will be manifest that the rocker member 26 will be folded into the housing of the pillar member and the projection 35 on the door 30 will enter the cut away or recessed portion 36 of the pillar member 18, thereby providing a minimum or necessary clearance space 43 between the bead or molding 44 on the door and the bead or molding 45 on the pillar member, as well as the necessary clearance between the end of the door and the pillar member.

When, however, the door is swung open to the position shown in Figure 4, the rocker member as well as the arms 37—38 will also move into the opening or cut away portion 36 in the pillar member.

With this construction it will be manifest that the parts will be braced against any sagging or accordion movements, and at the same time the point of sliding connection between the arms 37—38 and the upper and lower elements of the carrier member will be protected by the edges of the rocker member and, in the event that the projections 39—40 are formed separately and attached to the arms 37—38, the edges of the rocker member 26 will at all times prevent these formations 39—40 from dropping out of position.

The reduced rear wall 17 of the base plate enters recesses 46 in the rear edges of the elements 20 of the carrier member, see particularly Figures 3 and 6, and these parts cooperate to assist in bracing the parts and at the same time relieve the fastening screws or members 25 which secure the carrier member to the base plate, against strain.

It will also be manifest that with this improved construction of hinge all accordion movement as well as sagging and chattering of the parts of the hinge will be completely obviated.

In the event that it becomes necessary to remove the hinge for any purpose, all that is necessary is to swing open the door and remove the fastening or anchoring screws 25, after which the parts may be readily detached from the pillar 18 without removing the base plate 15, by simply drawing the carrier member out of the housing 16.

While the preferred form of the invention has been herein shown and described, it is to be understood that various changes may be made in the details of construction and in the combination and arrangement of the several parts, within the scope of the claims, without departing from the spirit of this invention.

What is claimed as new is:—

1. A hinge comprising a pillar member, a door member, said pillar member comprising a base secured to and recessed into the pillar and shaped to form a housing, a carrier member fitted in said housing and detachably secured to the pillar member, a portion of the rear wall of the base member being recessed into the carrier member to relieve the fastening means of the carrier member from strain, a rocker member pivoted at one end within the carrier member and pivotally connected at its other end to the door member, said rocker member being foldable into the carrier member, rigid arms extending from the door member and projecting into the carrier member, and sliding connections between said arms and the carrier member on opposite sides of the rocker member and remote from the pivots of the rocker member.

2. A hinge comprising a stationary and a swinging member, a rocker member, a pivot connecting the rocker member to the stationary member, said pivot being disposed in the portion of said stationary member remote from said swinging member, said rocker member being foldable into the stationary member, means piv-

otally connecting the free end of the rocker member to the swinging member, rigid arms connected to the swinging member and projecting into the said stationary member, and sliding connections between said arms and the said stationary member, the said sliding connections embodying pins and slots, each of said slots being of an extended length, and of predetermined contour to control the movement of the swinging member first in an outward motion and then in a swinging motion about said stationary member.

3. A hinge comprising a stationary and a swinging member, a rocker member, a pivot connecting the rocker member to the stationary member, said pivot being disposed in the portion of said stationary member remote from said swinging member, said rocker member being foldable into the stationary member, means pivotally connecting the free end of the rocker member to the swinging member, rigid arms connected to the swinging member and projecting into said stationary member, and sliding connections between said arms and the said stationary member, each of said sliding connections comprising a projection on one of the parts, and a guideway carried by the other co-operating part and in which guideway the respective projections move, a portion of the guideway being formed on an arc described from a center adjacent the first said pivot and another portion of the guideway being of varying contour and coacting with said arcuate portion to control the movement of said swinging member, said last mentioned portion of said guideway causing said swinging member to move outwardly substantially parallel with the adjacent edge of said stationary member, and said arcuate portion of said guideway causing said swinging member to swing about said stationary member.

4. A hinge comprising a stationary member and a swinging member, a housing formed by the stationary member, a rocker member, a pivot connecting one end of the rocker member to the stationary member and disposed in a portion of said housing remote from the exposed edge thereof, said rocker member being pivotally connected at its outer end to the swinging member, an arm rigid with the swinging member and projecting into the housing between the edge of the rocker member and the adjacent wall of the housing, and a sliding connection between the free end of the arm and the wall of the housing, said connection being free from the rocker member and intermediate the pivots of the rocker member, said sliding connection comprising a projection on one of the parts and a guideway in the other part, said projection being adapted to move freely in said guideway, and said guideway having one part constructed on an arc described about a center adjacent the first said pivot and the remainder thereof adapted to control the movement of said swinging member parallel to the adjacent face of said stationary member prior to the swinging thereof about said stationary member under control of said arcuate portion of said guideway.

5. A hinge comprising a stationary support and a swinging member, a link member pivotally connected at its ends respectively to said support and to said swinging member, said swinging member being provided with an arm projecting normally therefrom and having at its remote extremity a pivotal projection, and a slot in said stationary support engaging said pivotal projection, said slot being of predetermined contour and operative through said pivotal projection to regulate the movement of said swinging member in the first instance substantially parallel to the adjacent face of said stationary support and subsequently in a curved path to respectively move said swinging member free of proximate abutments and swing said member about said support, the pivot connecting said link member to said stationary support being disposed rearwardly in said stationary support beyond the path of said pivotal projection moving in said slot.

6. A hinge of the type described including a link member pivotally connecting a stationary supporting member and a swinging member, the pivot connecting said link member with said stationary member being disposed at the extremity of said stationary member farthest from said swinging member, a slot disposed in said stationary member between said pivot and the edge of said member adjacent said swinging member, means projecting from said swinging member and engaging said slot, said slot being of predetermined contour and effective to control the movement of said swinging member with respect to said stationary supporting member in a path first substantially parallel with the adjacent face of said stationary member and subsequently curved about said stationary member.

MAUD L. ANDERSON.