(No Model.)

S. W. ROBINSON.

SUBSTRUCTURE FOR ELEVATED RAILWAYS.

No. 404,017. Patented May 28, 1889.

FIG. 1

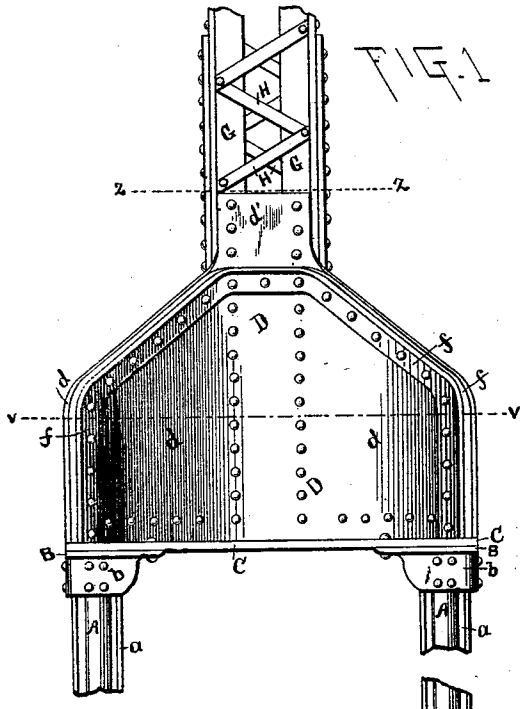

FIG. 2

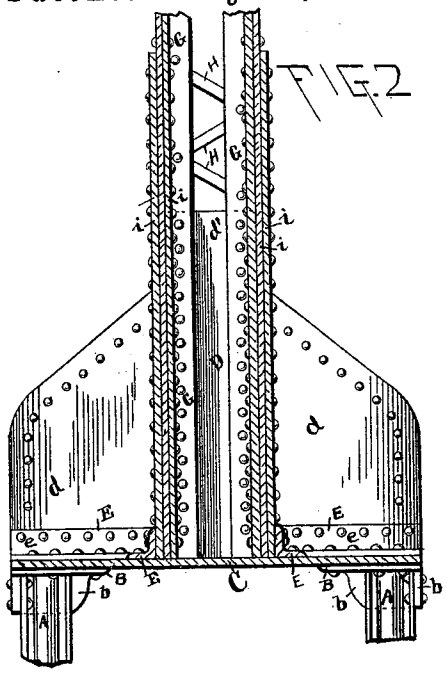



FIG. 4

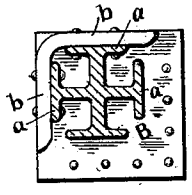

FIG. 3

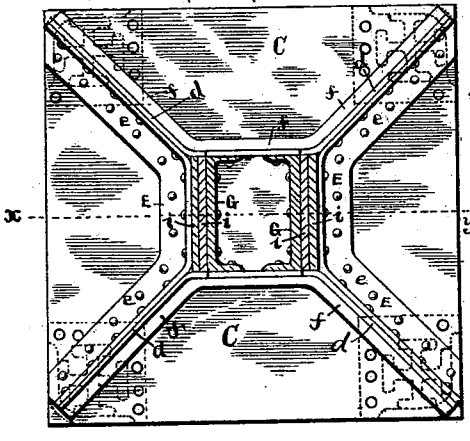

FIG. 7

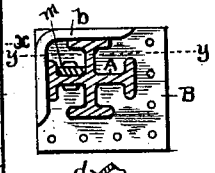

FIG. 5

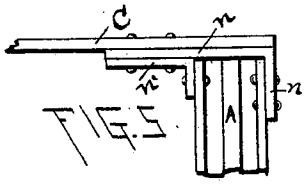

FIG. 6

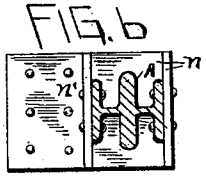

FIG. 8

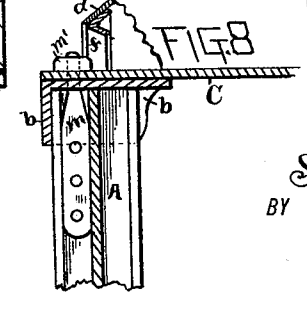

WITNESSES:

Barton Griffith.

Ira C. Koehne.

INVENTOR,

Stillman W. Robinson

BY

C. C. Shepherd.

ATTORNEY.

N. PETERS, Photo-Lithographer, Washington, D. C.

UNITED STATES PATENT OFFICE.

STILLMAN W. ROBINSON, OF COLUMBUS, OHIO.

SUBSTRUCTURE FOR ELEVATED RAILWAYS.

SPECIFICATION forming part of Letters Patent No. 404,017, dated May 28, 1889.

Application filed July 23, 1888. Serial No. 280,829. (No model.)

To all whom it may concern:

Be it known that I, STILLMAN W. ROBINSON, a citizen of the United States, residing at Columbus, in the county of Franklin and State of Ohio, have invented a certain new and useful Improvement in Substructures for Elevated Railways, of which the following is a specification.

My invention relates to that class of substructure wherein elevated railways are supported upon vertical metallic columns, the latter being anchored to a substructure located beneath or partially beneath the surface of the street.

The objects of my invention are to provide a substantial support for superstructure; to so form and construct the same as to obviate the necessity of using masonry; to accomplish these objects with the necessity of but slight if any excavation, and to construct and erect my substructure in a speedy, accurate, and substantial manner without causing unnecessary obstruction of the streets during the construction of the elevated railway. These objects I accomplish in the manner illustrated in the accompanying drawings, in which—

Figure 1 is an elevation of the column-supporting parts, the line of street-surface being indicated by line *v v*. Fig. 2 is a central vertical section of the same, taken on line *x x* of Fig. 3. Fig. 3 is a transverse section taken on line *z z* of Fig. 1. Fig. 4 is a view of one of the pile-caps inverted and showing the pile in cross-section connected therewith. Fig. 5 is a side elevation of the upper portion of one of the piles, showing a modified form of cap connected therewith. Fig. 6 is an under side view of the cap and pile-section shown in Fig. 5. Fig. 7 is an under side view of the pile-cap, showing a different manner of anchoring the supporting-column base-plate to the pile; and Fig. 8 is a vertical section of the same, taken on line *y y* of Fig. 7.

Similar letters refer to similar parts throughout the several views.

A represents the piling, consisting, as shown, of four metallic piles of the class known as "flange piles." These piles A are driven into the earth in the usual manner until below the surface of the street, each pile being preferably located at one of the corners of an imaginary square. Upon the head or upper end of each of these piles is placed a metallic plate, B, having formed therewith a downwardly-extending lip or flange, *b*, to which is riveted or otherwise secured two of the flanges *a* of the piles A, as shown in Fig. 4. Seated upon the upper sides of the pile plates or caps B, and rigidly secured thereto by means of bolts or rivets, is a metallic base-plate, C.

Made to extend upwardly from the upper surface of the base-plate C, to which they are secured, as hereinafter described, are two metallic plates, D, each of said plates D being bent from an imaginary vertical line drawn on each side of the center of its width to form two outwardly-extending and diverging wings, *d*. These approximately **V**-shaped plates, thus formed, are so placed that their central portions, or portions between the wings *d*, will be parallel with each other and with two opposite sides of the plate C, the lower edge of said central portions being made to rest respectively on opposite sides of the center of the base-plate and their outer edges terminating respectively at or near the corners of said base-plate.

The central portion of each of the plates D may be continued upward to form a neck, *d'*.

E E represent angle-bars bent to conform to the bend of the plates *d*. The outwardly-extending and diverging arms *e* of these angle-bars E are made to bear within the angle formed by the union of the lower edges of the plates D and the base-plate C, the lower flanges of said arms being riveted to the said base-plate, and their upper flanges being likewise secured respectively to the outer sides of the wings *d* of the plates D, thus assuring the latter in their above-described position. The upper corners of each of the plates D are preferably clipped to slope from the central column, hereinafter described. Riveted or otherwise secured to each of the plates D, adjoining its outer edge and crossing said plate at the base of the neck *d'*, is one flange of an angle-bar, *f*.

G G represent vertical channel-bars, which extend upward from the upper side of the base-plate between the inner sides of the central portions of the plates D, their outer sides being parallel with and a short distance

from the central portion of the upwardly-extending flange of the angle-bar E. These channel-bars G have their flanges turned inward and secured by rivets or otherwise to the inner sides of the plates D, and are continued upward to form the main body of the column supporting the superstructure. The channel-bars G are connected, as shown, by slats or lacing H.

i i represent vertical strengthening-plates, one or more of which may be riveted to the outer sides of the channel-bars, and also secured at their lower ends between said channel-bars and the angle-bars E.

The superstructure may be attached to and supported on the upper ends of the columns thus formed, in the usual manner.

In anchoring the base-plate to the pile, instead of the construction shown in Fig. 4 and above described, a strap-bolt, *m*, may be used, as shown in Figs. 7 and 8, the strap end of which is riveted or bolted to the web of the pile, with the bolt end projecting through a hole in the cap and base-plate, said bolt end having a nut, *m'*, thereon adapted to be made to bear against the upper side of the base-plate.

In Fig. 5 is shown a construction of cap better adapted for wrought-iron, consisting of two angle-plates, *n n'*, one lying upon the other, between the angle-flanges of which is riveted or bolted the pile A, as shown.

It is obvious that the particular form of parts herein shown and described, the number of piles mentioned, and the details of construction herein shown, may be changed without preventing the attainment of the objects of my invention or altering its principle.

It will be seen by the above-described construction that a substantial form of substructure is provided, the use of which will obviate the necessity of using masonry and forming excavations, thus admitting of a rapid construction, with but comparatively slight inconvenience to or interruption of street-traffic.

Having now fully described my invention, what I claim, and desire to secure by Letters Patent, is—

1. In a substructure for elevated railways, the combination, with three or more piles having caps *b*, of a base-plate secured to caps and piles and a superstructure-supporting column supported on said base-plate, substantially as and for the purpose specified.

2. The combination, with three or more piles, A, having flanged caps *b*, to which they are secured, of base-plate C, secured upon said caps, a superstructure-supporting column supported upon said base-plate and plates D, and angle-bars secured to said base-plate and column, substantially as and for the purpose specified.

STILLMAN W. ROBINSON.

In presence of—
C. W. ALLISON,
C. C. SHEPHERD.