US 20100222138A1

(19) **United States**

(12) **Patent Application Publication**

(10) **Pub. No.: US 2010/0222138 A1**

(43) **Pub. Date: Sep. 2, 2010**

Luciano, JR. et al.

(54) **SHARED PROGRESSIVE GAMING SYSTEM AND METHOD**

(75) Inventors: **Robert Anthony Luciano, JR.**, Reno, NV (US); **Loren Travis Nelson**, Reno, NV (US)

Correspondence Address:
BALLY GAMING INC.
6601 S. BERMUDA ROAD
LAS VEGAS, NV 89119 (US)

(73) Assignee: **Bally Gaming, Inc.**, Las Vegas, NV (US)

(21) Appl. No.: **12/777,217**

(22) Filed: **May 10, 2010**

Related U.S. Application Data

(63) Continuation of application No. 11/088,659, filed on Mar. 23, 2005, now Pat. No. 7,713,121.

Publication Classification

(51) **Int. Cl.**
A63F 9/24 (2006.01)

(52) **U.S. Cl.** **463/27**; 463/42

(57) **ABSTRACT**

The present invention provides a progressive system for paying out a primary progressive prize and a secondary progressive prize. The system includes a progressive controller, a plurality of game devices each configured to execute a game of chance, and a network interconnecting the progressive controller and the game devices. A funding module is executable by the progressive controller to maintain primary and secondary progressive awards and detect occurrence of a win event on any of the game devices. Upon occurrence of the win event, the funding module awards the primary progressive award, and also determines a distribution of the secondary progressive award. The system further includes a prize server and a prize expiration and reissue module executable by the prize server which determines an expiration period for a prize issued by any of the game devices, and then funds the prize to the secondary progressive award upon expiration of the expiration period.

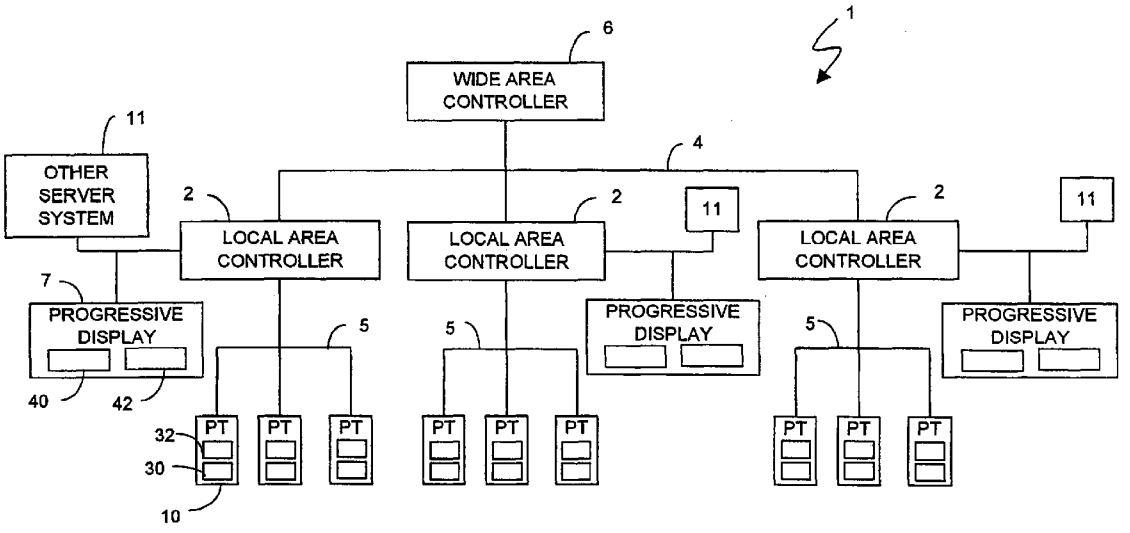

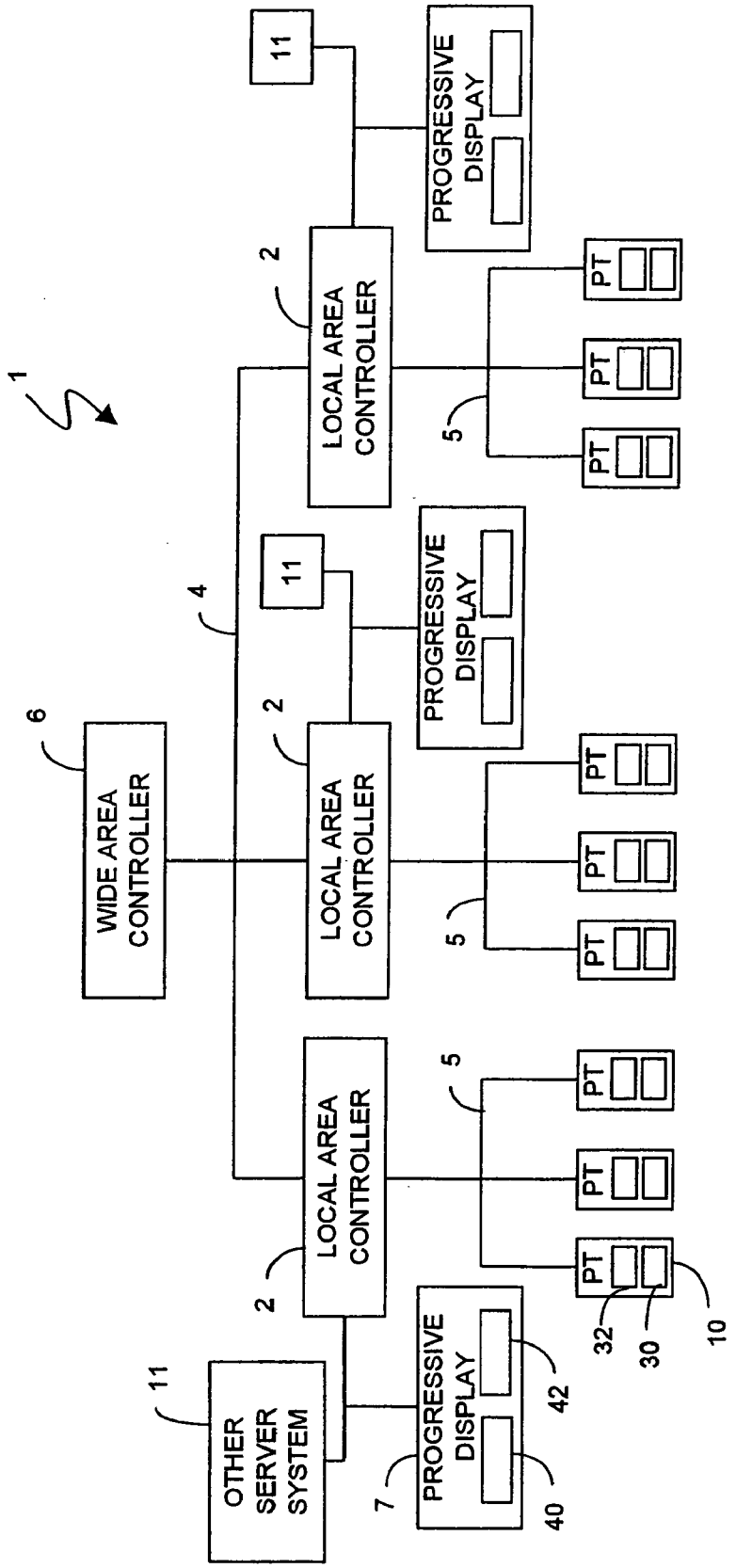
1
WIDE AREA CONTROLLER
6
4
LOCAL AREA CONTROLLER
2
LOCAL AREA CONTROLLER
2
LOCAL AREA CONTROLLER
2
OTHER SERVER SYSTEM
11
11
11
11
PROGRESSIVE DISPLAY
PROGRESSIVE DISPLAY
PROGRESSIVE DISPLAY
7
40
42
5
5
5
PT
PT
PT
PT
PT
PT
PT
PT
PT
32
30
10

Fig. 1

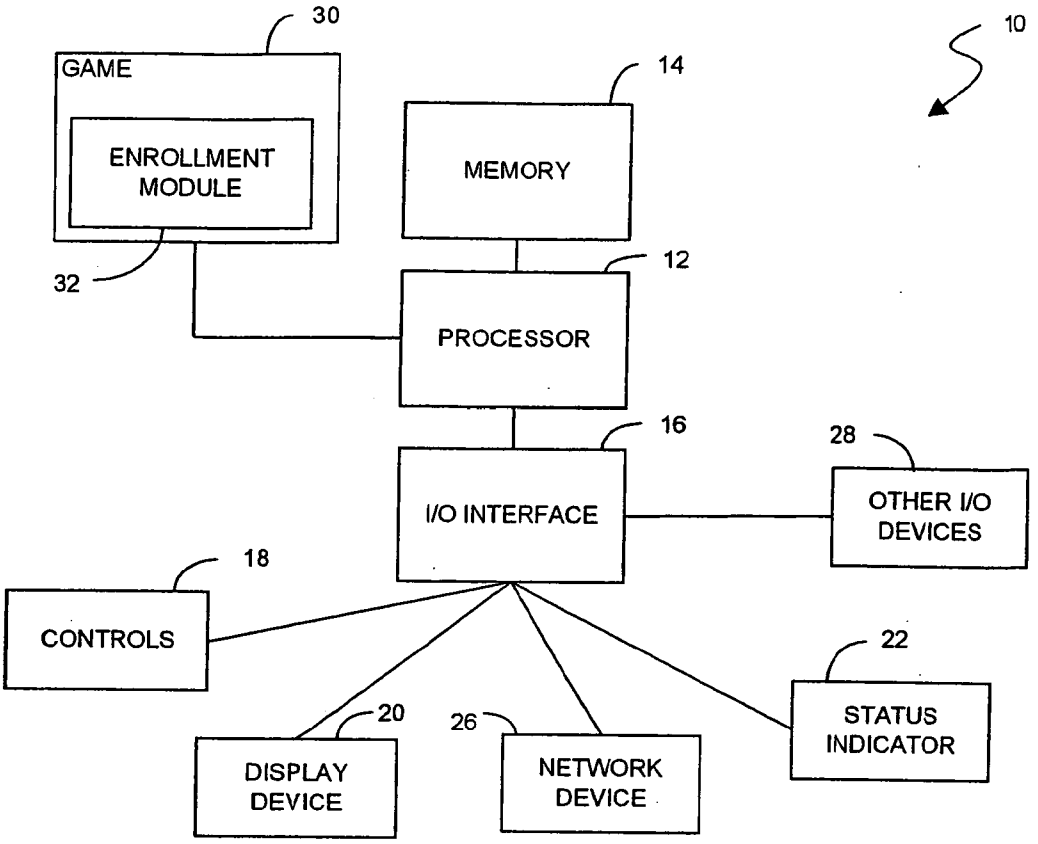
30
GAME
ENROLLMENT MODULE
32
14
MEMORY
10
12
PROCESSOR
16
I/O INTERFACE
28
OTHER I/O DEVICES
18
CONTROLS
22
STATUS INDICATOR
20
DISPLAY DEVICE
26
NETWORK DEVICE

Fig. 2

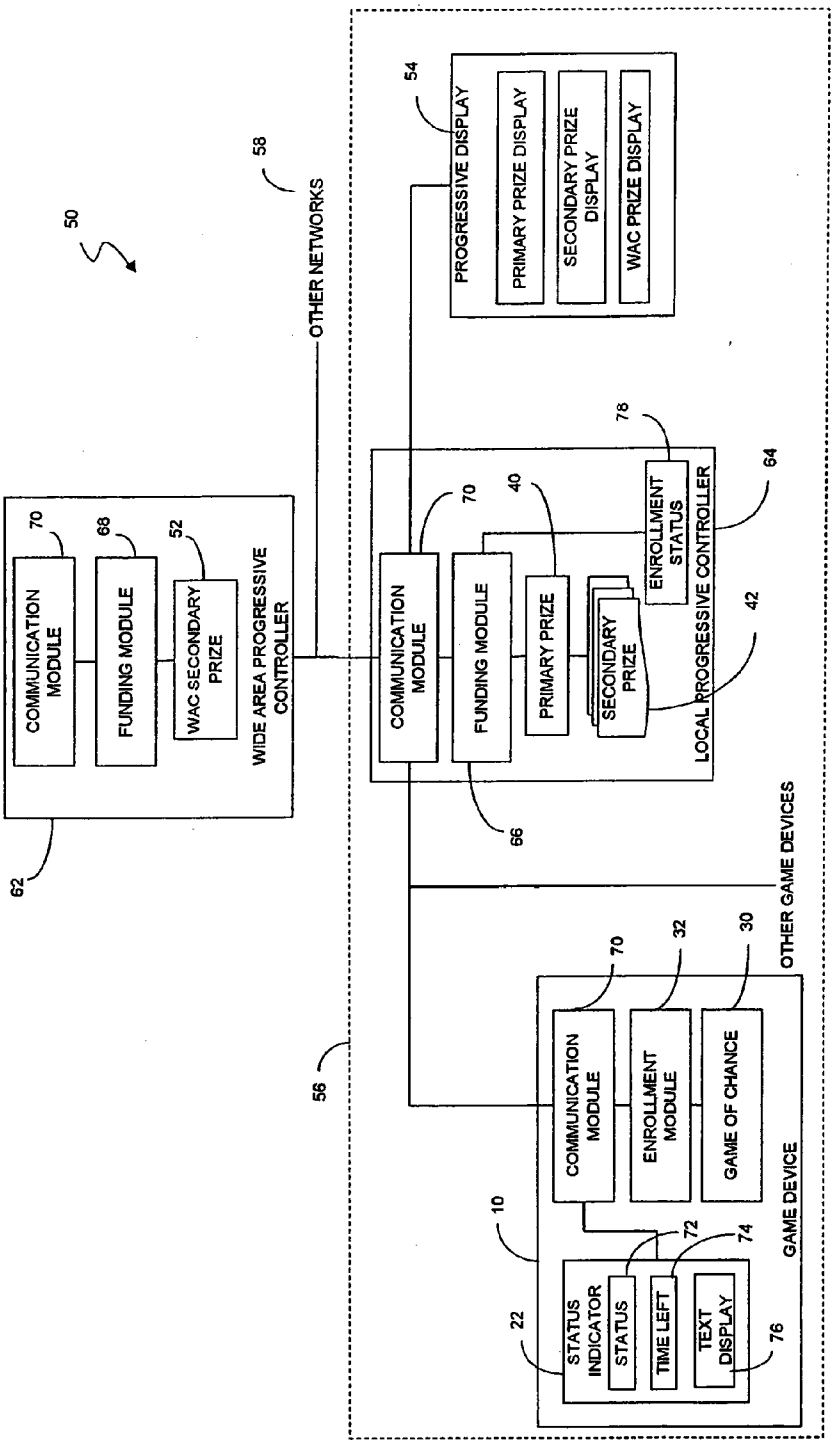
50
58
OTHER NETWORKS
54
PROGRESSIVE DISPLAY
PRIMARY PRIZE DISPLAY
SECONDARY PRIZE DISPLAY
WAC PRIZE DISPLAY
70
68
52
COMMUNICATION MODULE
FUNDING MODULE
WAC SECONDARY PRIZE
WIDE AREA PROGRESSIVE CONTROLLER
62
78
64
40
42
66
COMMUNICATION MODULE
FUNDING MODULE
PRIMARY PRIZE
SECONDARY PRIZE
ENROLLMENT STATUS
LOCAL PROGRESSIVE CONTROLLER
OTHER GAME DEVICES
56
70
32
30
COMMUNICATION MODULE
ENROLLMENT MODULE
GAME OF CHANCE
10
72
74
22
STATUS INDICATOR
STATUS
TIME LEFT
TEXT DISPLAY
76
GAME DEVICE

Fig. 3

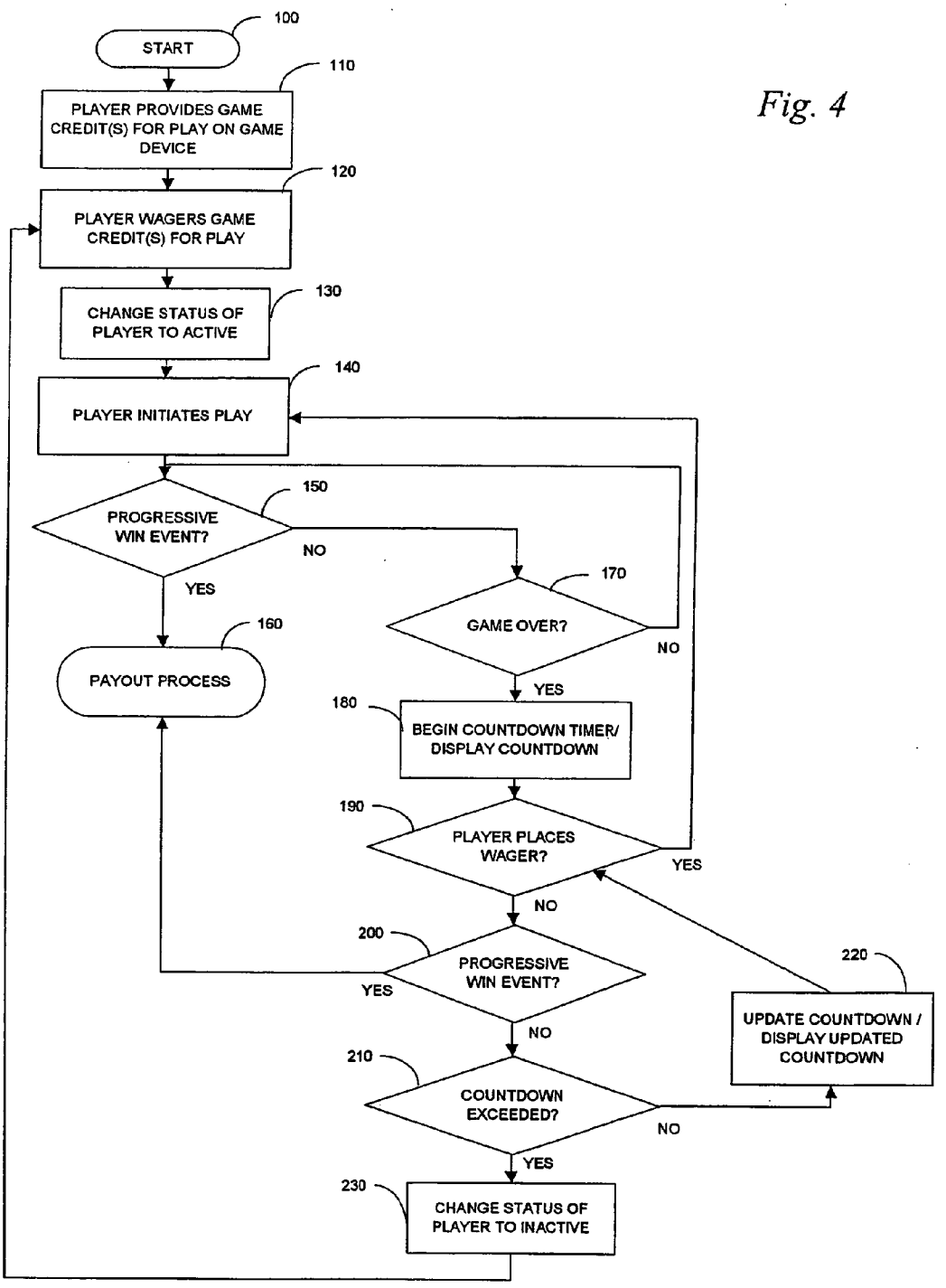
100
START
110
PLAYER PROVIDES GAME CREDIT(S) FOR PLAY ON GAME DEVICE
120
PLAYER WAGERS GAME CREDIT(S) FOR PLAY
130
CHANGE STATUS OF PLAYER TO ACTIVE
140
PLAYER INITIATES PLAY
150
PROGRESSIVE WIN EVENT?
NO
YES
160
PAYOUT PROCESS
170
GAME OVER?
NO
YES
180
BEGIN COUNTDOWN TIMER/ DISPLAY COUNTDOWN
190
PLAYER PLACES WAGER?
YES
NO
200
PROGRESSIVE WIN EVENT?
YES
NO
210
COUNTDOWN EXCEEDED?
NO
YES
220
UPDATE COUNTDOWN / DISPLAY UPDATED COUNTDOWN
230
CHANGE STATUS OF PLAYER TO INACTIVE

Fig. 4

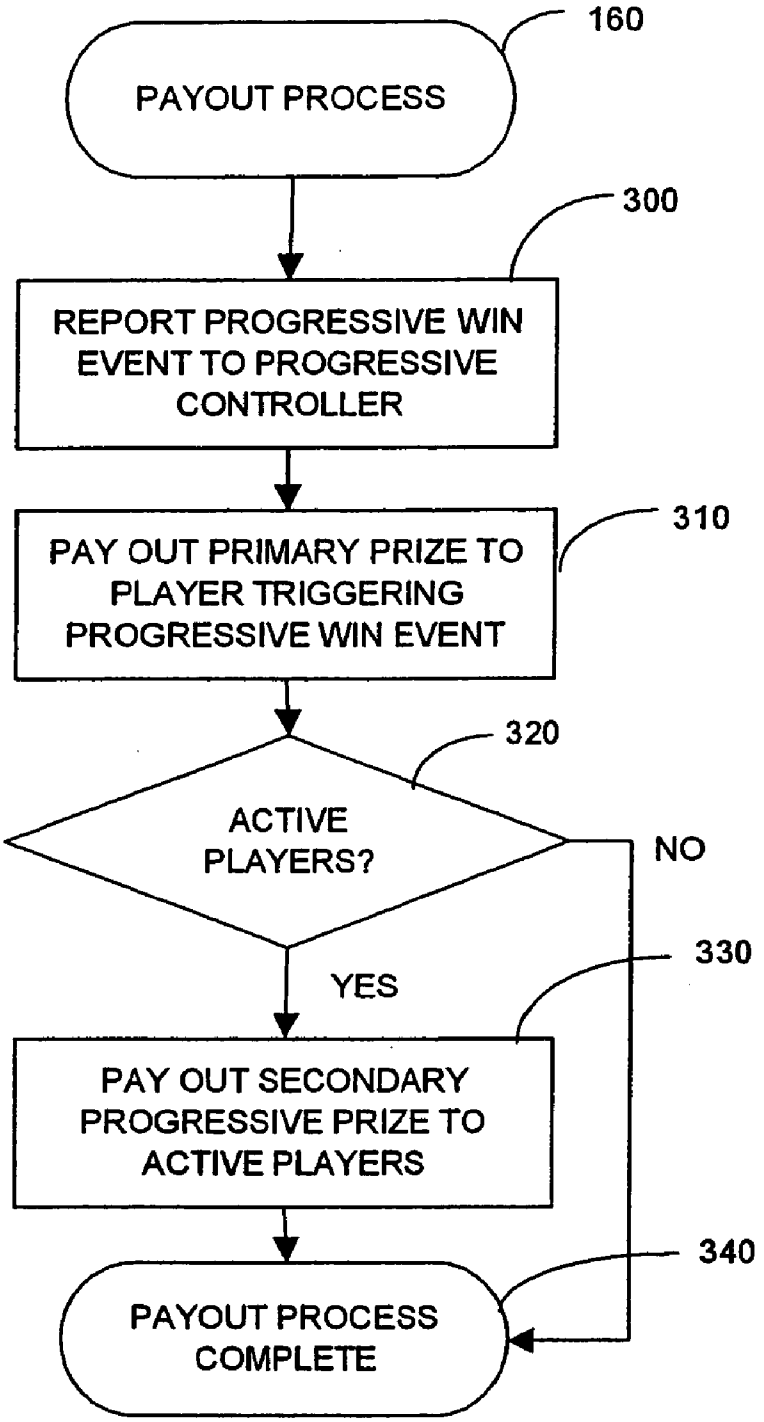
160
PAYOUT PROCESS
300
REPORT PROGRESSIVE WIN EVENT TO PROGRESSIVE CONTROLLER
310
PAY OUT PRIMARY PRIZE TO PLAYER TRIGGERING PROGRESSIVE WIN EVENT
320
ACTIVE PLAYERS?
NO
YES
330
PAY OUT SECONDARY PROGRESSIVE PRIZE TO ACTIVE PLAYERS
340
PAYOUT PROCESS COMPLETE

Fig. 5

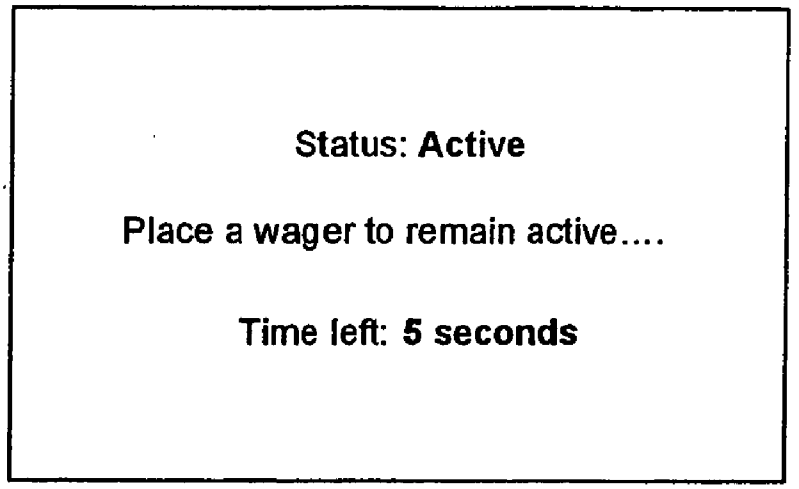
Status: Active
Place a wager to remain active....
Time left: 5 seconds

Fig. 6A

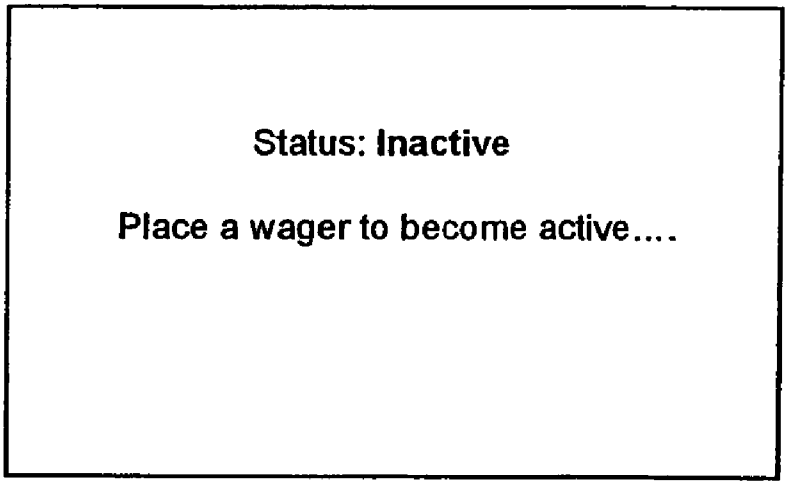
Status: Inactive
Place a wager to become active....

Fig. 6B

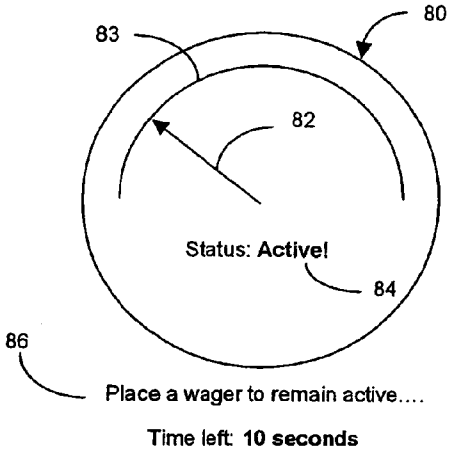

Fig. 7A

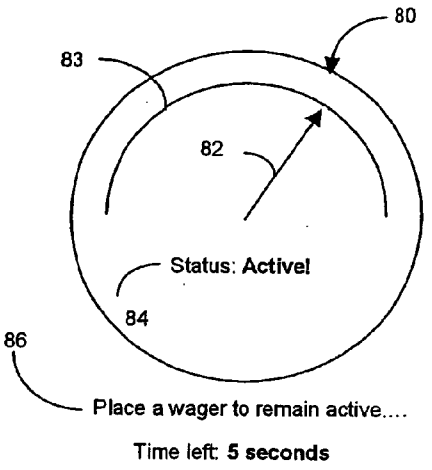

Fig. 7B

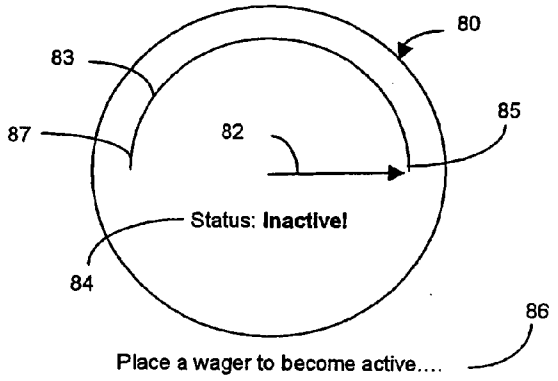

Fig. 7C

SHARED PROGRESSIVE GAMING SYSTEM AND METHOD

CROSS-REFERENCE TO RELATED APPLICATIONS

[0001] This application is a continuation of U.S. patent application Ser. No. 11/088,659, filed Mar. 23, 2005, which is herein incorporated by reference in its entirety.

BACKGROUND

[0002] 1. Field of the Invention

[0003] This invention pertains generally to progressive systems for gaming. More particularly, this invention relates to a shared progressive gaming system and method which allows a plurality of players to share a progressive prize.

[0004] 2. The Prior Art

[0005] Progressive systems for gaming environments such as casinos are known. A typical progressive system arrangement includes a plurality of gaming devices, such as slot machines, video poker machines, video keno machines, video lottery machines, each linked for communication with a central progressive controller. A wager is made to play the game associated with the gaming devices. For each wager made at the gaming devices, a portion is used to fund a progressive prize which is maintained and accumulated by the progressive controller. The progressive prize is then awarded to a player upon the occurrence of a triggering win event, either determined pursuant to play on the gaming device or by some other criteria, such as according to a random determination by the progressive controller. Since the triggering win event for awarding the progressive prize occurs infrequently, the progressive prize generally accumulates to a large sum. As a result, players are attracted to playing the gaming devices in order to win the large progressive prize, thereby increasing game play and therefore overall revenue for the casino operator.

[0006] Efforts to improve this general scheme for paying a progressive prize have been attempted to further increase player interest. An example improvement arrangement is disclosed in U.S. Pat. No. 5,564,700 to Celona. In the Celona progressive method, a progressive jackpot is paid proportionally to eligible players at each of the linked gaming machines. The eligibility of players to share in the progressive jackpot may be conditioned upon "playing a maximum bet" within a "predetermined time interval before the progressive jackpot-winning outcome occurs." Payment of the progressive jackpot may be divided equally among all eligible players, or may be paid proportionally (e.g., the player at the machine that generated the progressive jackpot-winning outcome may receive a greater proportion (such as half) of the jackpot, or the proportion of the jackpot paid to each of the players may be adjusted in accordance with the contribution of each machine to the progressive jackpot sum).

[0007] While the payout method of Celona may foster increased participation and play form players, there are several drawbacks. First, the motivation for winning a large progressive jackpot is diminished, even where as in Celona "the player at the machine that generated the progressive jackpot-winning outcome may receive a greater proportion." This diminished motivation arises from the fact that the player perceives that he or she will have to "share" the displayed or advertised jackpot with other players. Players prefer playing for a large life-changing jackpot, and the sharing of the jackpot, even where the player receives a greater proportion, reduces the overall player interest.

[0008] Additionally, the incentive for remaining eligible to share in the jackpot is inadequate in the Celona implementation. For example, one way to determine eligibility is for the central controller to determine the interval between the time of play initiation on the gaming device and the time of the jackpot-winning outcome; if the time interval is less than the predetermined interval for jackpot eligibility, then the player qualifies to share in the jackpot. However, Celona carries out this calculation after the jackpot-winning outcome has already occurred. There are not indicators or cues provided to the player to encourage the player to remain eligible prior of the jackpot-winning outcome. Absent such indicators and cues, players are less informed and are less likely to satisfy the requirement of remaining eligible. This problem results in decreased play and lost revenues for the operator.

[0009] Accordingly, there remains a need for further increased player participation in progressive payout arrangements. The present invention satisfies these needs, as well as others, and generally overcomes the deficiencies found in the background art.

BRIEF DESCRIPTION OF THE INVENTION

[0010] The present invention is a system and method for providing an enhanced shared progressive system and method, suitable for use in gaming establishments such as casinos. T he progressive system may be used in a wide area environment and/or a local area environment.

[0011] In general, the progressive system comprises at least one progressive controller coupled for communication with one or more gaming devices (or player terminals) via a networking connection. A funding module operating in the progressive controller maintains a primary progressive prize and a secondary progressive prize, the progressive prizes displayed normally by the progressive controller using a progressive display meter or other display means. In operation, the funding module funds the progressive prizes which are awarded as described in greater detail further below. Various funding arrangements are suitable for use in funding the prizes, including using a percentage of wagers places on the gaming devices, or using a percentage of the pay table awards for paying prizes on the gaming devices, for example.

[0012] An enrolment module operating in the gaming device carries out several operations as described in more detail further below. In general, the enrolment module monitors game events on the gaming device and further communicates with the funding module to indicate the "active" or "inactive" status of the gaming machine on which a player may be playing, based on the determined game events. According to one aspect of the present invention, an "active" status on a gaming machine allows a player to be eligible for a secondary progressive prize distribution event, in a manner associated with the gaming machine (i.e., candle lights up for traditional handpays that exceed the automated payout thresholds set by each casino or operator, credits are downloaded to the game machine, credits are associated with the player's player account if the player is using a tracking card, etc.). Like the secondary progressive distribution event, the primary progressive win event may be carried in any manner associated with the win event on a gaming machine, including but not limited to bill pays, coin pays, handpays, adding play credits to the gaming machine's credit meter, adding credit amounts to a player's account if the player is using a player

tracking card, issuing a redemption voucher that may or may not be associated with a specific player from the gaming machine having the winning event, etc. Various strategies may be used to determine the status of the player to encourage play on the gaming device, such as based on the average play over a period of time, or based on a requirement that the player perform some action within a period of time from the end of the previous game, for example.

[0013] The enrolment module is further coupled for communication with a status indicator. The status indicator may comprise various forms such as mechanical indicators or dials and/or electronic display indicators (e.g., video display, LED, LCD), or may comprise a portion of the base game display. The enrolment module displays the status of player (i.e., "active" or "inactive") through the status indicator. If the player's status is "active," the status indicator may further indicate how long the player's status will remain "active" before becoming "inactive" (e.g., a countdown indicator or dial). Other text messages may further be displayed to the player pursuant to this arrangement such as warnings, for example.

[0014] In operation, the system awards the primary and secondary progressive prizes pursuant to game events occurring on the gaming devices. In particular, the funding module monitors the communication network for specific progressive award triggering events which when triggered by a player, entitling the player to the primary progressive prize. Additionally, players who have an "active" status at the time of the progressive award triggering event are entitled to share in the secondary progressive prize. The share of the secondary prize may be distributed to players using various strategies including an equal share, or a proportional share based on one or more criteria (e.g., amount bet, average bet, player tracking points).

[0015] According to the present invention, players seeking large progressive wins are drawn to the system of the present invention because a large primary progressive prize may be won without sharing with other players; and at the same time players seeking to benefit from regular or active play are also drawn to the system because one or more shared secondary progressive prizes may be dispensed to the "active" player even if another player has won the large primary prize. Additionally, the enrolment module and status indicator provides a visible means for encouraging the player to remain active to qualify for the shared secondary prize. Under this arrangement, the present invention overcomes many of the disadvantages associated with the prior art.

[0016] According to another embodiment of the invention, the system further provides a prize expiration and reissue module executed by the central progressive controller or other central server device. According to this embodiment, the player may be awarded one or more prizes, which require redemption. Such prizes may be in the form of points, coupons, game pieces, for example and may require the player to accumulate or collect a certain amount or arrangement of points, coupons, game pieces, etc. The prizes may be awarded to a player using a variety of means, such as via a printed ticket or stored electronically using an account server, for example. In some cases, a player may not redeem his or her prize. In other cases, the player may not accumulate sufficient points, coupons, credits, etc. to enable the player to qualify for a prize, in which case, the points, coupons, credits, etc. may expire after a lapse period. Various other events may cause, the prizes, points, etc. to expire. The prize expiration and reissue module of the present invention provides a means for tracking these prizes to determine expiration, and upon certain conditions re-issuance of the expired prizes. According to one embodiment, the expired prizes are maintained and accumulated by the prize expiration and reissue module and awarded to players of the system upon the occurrences certain events. The prize expiration and reissue module may accumulate and award the expired prizes as a "secondary progressive prize" which are awarded to and shared by active players as described above. This arrangement provides an enhanced funding scheme for funding prizes for the secondary progressive prize. A similar arrangement may be used to fund the primary progressive prize.

[0017] The invention further relates to machine readable media on which are stored embodiments of the present invention. It is contemplated that any media suitable for retrieving instructions is within the scope of the present invention. By way of example, such media may take the form of magnetic, optical, or semiconductor media. The invention also relates to data structures that contain embodiments of the present invention, and to the transmission of data structures containing embodiments of the present invention.

[0018] Further advantages of the invention will be brought out in the following portions of the specification, wherein the detailed description is for the purpose of fully disclosing the preferred embodiment of the invention without placing limitations thereon.

BRIEF DESCRIPTION OF THE DRAWING

[0019] The present invention will be more fully understood by reference to the following drawings, which are for illustrative purposes only.

[0020] FIG. **1** is a functional block diagram depicting an example progressive system in accordance with the present invention.

[0021] FIG. **2** is a functional block diagram depicting a gaming device in accordance with the present invention.

[0022] FIG. **3** is a functional block diagram depicting a second example progressive system in accordance with the present invention.

[0023] FIG. **4** is a logical flow diagram depicting an example process for providing a primary and secondary progressive prize in accordance with the present invention.

[0024] FIG. **5** is logical flow diagram depicting an example process for paying out a primary and secondary progressive prize in accordance with the present invention.

[0025] FIGS. **6**A, **6**B, **7**A, **7**B, and **7**C depict example status display indicators suitable for use with the present invention.

DETAILED DESCRIPTION OF THE PREFERRED EMBODIMENTS

[0026] Persons of ordinary skill in the art will realize that the following description of the present invention is illustrative only and not in any way limiting. Other embodiments of the invention will readily suggest themselves to such skilled persons having the benefit of this disclosure.

[0027] Referring first to FIG. **1**, there is generally shown an illustrative progressive system **1** suitable for use with the present invention. The system **1** comprises a plurality of local area controllers **2**, each operating in a local network **5**, and plurality of gaming devices (or player terminals) **10**, each operatively coupled for communication with a respective local area controller **2** via respective local network **5**.

[0028] A progressive display **7** is provided on each local network **5** and is operatively coupled to the local area controller **2** for display of a primary jackpot progressive prize **40** and at least one secondary jackpot progressive prize **42**. As described in more detail below, the primary jackpot progressive prize **40** is awarded to the player triggering the progressive payout event. The secondary jackpot progressive prize **42** is awarded to other eligible players as described more fully below. The prizes **42** and **40** are normally funded by play of the gaming devices **10** (e.g., a percentage of wagers, or from the pay table) and are generally displayed to the users via progressive display **7**. Other means for funding the progressive prize are also suitable for use with the invention, such as funding the progressive prize through a marketing budget, for example. As described in another embodiment below, the secondary prize **42** may also be funded using "expired" awards (e.g., expired points, coupons, etc.), rather than through wagers placed at the gaming devices **10**.

[0029] Each local area controller **2** may further be coupled to a wide area controller **6** via a suitable communication connection (e.g., wide area network, frame relay). Under such an arrangement, each of the gaming devices **10** in each network **5** contribute to the primary jackpot progressive prize **40** and the secondary jackpot progressive prize **42**, which are each displayed at the local networks **5**. Each local network **5** may reside at a separate site or casino location from the other local network, thereby allowing broader participation among players visiting the various sits or locations. Additionally, with greater participation, the jackpots prizes **40**, **42** accumulate to higher totals at a faster rate.

[0030] Other server systems **11** may also be provided for each network **5**. Other sever systems **11** may include player tracking systems or accounting systems, for example. In accordance with one embodiment of the present invention, the other server systems **11** may also include a prize server system executing a prize expiration and reissue module which is configured to track expirable and/or expired prizes, which may be used to fund the progressive awards, as described more fully below.

[0031] Referring next to FIG. **2**, there is generally shown a block diagram of an example gaming device **10** having a processor **12** coupled to a memory **14** suitable executing an enrollment module. The enrollment module **32** is generally provided as part of the instructions/programming provided with the game **30**, which is played on the gaming device **10**. The game **30** generally includes a primary (or base) game and may also include a secondary (or bonus) game. The game **30** and the enrollment module **32** are normally provided as software instructions stored on a memory (such as an EPROM or other storage) which is read and executed by the processor **12** during operation. The operation of the enrollment module **32** is described more fully below.

[0032] The gaming device **10** is generally described herein as a conventional gaming machine, such as a slot machine, poker machine, keno machine, bingo machine, video lottery machine, and other like gaming device, although the enrollment module **32** is equally suitable for use with "table" games, where the functions are carried out in conjunction with management by a table attendant or dealer.

[0033] Referring again to FIG. **2**, the gaming device **10** further comprises an input/output (I/O) interface **16** which is coupled for communication with the processor **12**. the I/O interface **16** allows a player to interact (i.e., provide input controls and receive output signals) with the game **30** and the processes of the enrollment module **32** executed by the processor **12** via a plurality of devices, generally designated as controls **18**, display device **20**, status indicator **22**, network interface device **26**, ant other I/O devices **28** each of which are operatively coupled for communication to the I/O interface **16**.

[0034] The controls **18** generally comprise input buttons, switches, touch-screen controls, and/or other input controls to allow a player to provide game input to the gaming device **10** such as player options, selections, game commands, among others. The display device **20** generally comprises a monitor or other video output device (e.g., LCD panel) for communicating game output information to the player. The status indicator **22** as described more fully below provides a display or indicator to the player and indicates status information to the player (e.g., player status, active status time remaining). The network device **26** generally comprises a communication device such as a network card or serial device for communicating with other network devices (e.g., back-end servers) via a network which is generally coupled to the network device **26**. Other I/O devices **28** may also be provided, such as speakers, lights, alarms, etc.

[0035] The enrollment module **32** which is executed by the processor **12** carries out several operations to track and maintain the player's status. As noted above, various criteria may be used to define a player's eligibility for sharing in the secondary progressive prize **42**. For example, a player may be required to place a wager (or specific type of wager such as "maximum bet") within a certain time period after completing the previous game. The enrollment module **32** monitors the gaming device **10** to determine whether the requirements for eligibility have been met. The enrollment module **32** also indicates the player's status through the status indicator **22**. The enrollment module **32** further notifies the player when the player's status is about to expire or change from "active" to "inactive." Various warnings using visual display indicators (status indicator **22**) and/or sound output devices (e.g., speakers) may be used to alert the user. Example display indicators are described below in conjunction with FIG. **6** and FIG. **7**.

[0036] Referring now to FIG. **3**, another illustrative system **50** is shown including a wide area progressive prize **52**. Under this arrangement, three progressive prizes are made available at each local casino network **56**: a primary prize **40**, at least one secondary prize **42**, and at least one "Wide Area" (WAC) Prize **52**. A progressive display **54** at the local casino **56** may be used to display the amounts of each of the progressive prizes. The local casino networks **56** (and other local casino networks **58**) are coupled for communication with a central wide area progressive controller **62**, through a network communication system, such as a wide area network (WAN) system. A communication module **70** operating within each of the wide are controller **62**, the local controllers **64**, and the gaming devices **10** enable network communication between the devices of the system. In general, the communication module **70** comprises suitable network hardware (e.g., network interface cards, cabling) and software (e.g., communication software, protocols, network drivers) to enable communication between data processing devices.

[0037] At the local level **56**, the primary prize **40** and secondary prize **42** may be funded using a progressive funding model as described above (e.g., using a percentage of wagers from gaming devices from the local network **56**, marketing funds, etc.) by a funding module **66** executed by a local

progressive controller **64**. At the wide area level, the WAC prize **52** may be funded using a similar funding scheme (e.g., using a percentage of wagers made from gaming devices from all of the local networks **56**, **58**) by the funding module **68** executed by the wide area progressive controller. The WAC prize **52** may be defined as a primary prize in which case it is won by the player triggering the progressive win event; or it may be defined as a secondary prize in which case it is shared by all active players (from all networks **56**, **58**) the occurrence of a progressive win event. In other embodiments, the system **50** may define two WAC prizes, one of which is a primary prize, the other which is a secondary prize.

[0038] As depicted in FIG. **3**, the gaming devices **10** include a status indicator **22** to display the status of the player. In the example status indicator **22** of FIG. **3**, the status indicator comprises a status display **72**, a time left display **74**, and a text display **76**. The status display **72** indicates either a status of "active" or "inactive." The time left display **74** displays the time left (e.g., in seconds) before the player's status changes form "active" to "inactive." The text display **76** may be used to indicate text messages to the player, such as a warning message that the player's active status is expiring, for example. The game device **10** communicates with the local controller **64** to communicate, among other things, the player's status. This status information is maintained by the local controller **64** in an enrollment status database **78**. Under this arrangement, the status of the player can be ascertained and verified by the gaming device **10** and/or the local controller **64**, either together in independent of the other.

[0039] Referring next to FIG. **6**A and FIG. **6**B, example status indicator displays **22** are shown. In FIG. **6**A, the player's status is indicated as "Active." The display **22** further indicates that the player's status is only in effect for a time period (e.g., five (5) more seconds), and that the player must place a wager within that time period in order to remain "active" status. In FIG. **6**B, the player's status is indicated as "Inactive." The display **22** further indicates that the player must place a wager in order to become "active" status. Display **22** may be shown in a gaming device using separate display devices or may be shown occupying a portion of the main display of the gaming device.

[0040] Referring now to FIG. **7**A through **7**C, additional example status displays **80** representing analog gauges are shown. The gauges **80** may be physical analog devices controlled by the gaming device or may be a graphical representation of an analog display on a display device. The display **80** includes a movable needle **82** which rotates to define the active/inactive status of the player as well as the time period remaining for active status. Markings **83** define the time period remaining for active status as the needle sweeps from one end **87** to the inactive end **85**. Text indicator **84** defines the player's status as either "active" (FIG. **7**A and FIG. **7**B) or "inactive" (FIG. **7**C). Text indicator **86** further inform the player that the player's status is only in effect for a time period (e.g., 10 seconds in FIG. **7**A, 5 seconds in FIG. **7**B), and that the player must place a wager within that time period in order to remain "active" status. In FIG. **7**C, the needle **82** rests in the inactive position when the status of the game/player is "inactive"; text indicator **86** further indicates that the player must place a wager in order to become "active" status.

[0041] The method and operation of invention will be more fully understood with reference to the logical flow diagrams of FIG. **4** and FIG. **5**, as well as FIG. **1** through FIG. **3**, and FIG. **6** and FIG. **7**. The order of actions as shown in FIG. **2** and FIG. **3** and described below is only illustrative, and should not be considered limiting.

[0042] FIG. **4** is a flow diagram showing an example process associated with providing a primary progressive prize and a shared progressive prize in accordance with the present invention. In this example process, the requirements for "active" status necessitates placing a predefined wager (e.g., at least one credit, maximum bet) within a time limit (e.g., within twenty (20) seconds from the conclusion of the previous game). As described above, various other criteria may be used to define "active" status and "inactive" status which are anticipated for use with present invention. This process starts at block **100** where a gaming device **10** is provided for play in a casino environment. Initially, the gaming device **10** initiates a player's state to "inactive." Thus the status display **22** will initially indicate the player's state as inactive.

[0043] At block **110**, a player provides game credits for play on the gaming device **10**. The game credits are normally credited to a credit meter and tracked by the gaming device **10** for use in placing wagers. Various means for providing game credits may be used such as through bill acceptors/coin acceptors; cashless devices (e.g., player accounts, ticket accounts, bank accounts), among other.

[0044] At block **120**, the player wagers one or more credits for play on the gaming device **10**. As described above in some embodiments, a percentage of the wager may be used to fund the local progressive prize (primary and/or shared secondary) and/or the WAC progressive prize **52** (primary and/or shared secondary). In other embodiments, the primary and/or shared progressive prizes (whether local or WAC) may be funded from expired prizes (e.g., points, prizes, coupons, etc.).

[0045] Next at block **130**, the player's status is changed to active if the requisite wager (e.g., at least one credit, maximum bet) is placed by the player at block **120**. The status indicator **22** is also updated to reflect the player's "active" status. The gaming device **10** may communicate this change of status to the local controller **64** to update the player's status in the enrollment status database **78**. Any countdown timers which are counting down are also reset/stopped until the game has concluded.

[0046] At block **140**, the player initiates game play, normally by pressing a button or pulling a handle. The game of chance in then played in accordance with the rules of the game.

[0047] At decision block **150**, a determination is made whether a progressive win event has occurred. As described above, the progressive win event may be conditioned upon play of the gaming device **10** or may be centrally determined (e.g., by the local controller **64**). If a progressive win event has occurred, block **160** is carried and the payout process is initiated. This payout process is described more fully below in conjunction with FIG. **5**. If a progressive win event does not occur during play of the gaming device, block **170** is then carried out.

[0048] At decision block **170**, a determination is made whether the game of chance is over. If so, block **180** is then carried out. Otherwise, decision block **150** is repeated.

[0049] At block **190**, the play of gaming device **10** has concluded. The countdown timer (e.g., example countdown timers of FIG. **6** and FIG. **7**) is reset and started. As described above, the countdown timer may be used to indicate the time remaining before the player's status changes to "inactive."

Associated text displays may be used to communicate what the player must to do remain active (e.g., place a wager).

[0050] At decision block **190**, a determination is made whether the player places a wager. If the player places a wager, block **130** is then carried out to play the next game. If not block **200** is then carried out.

[0051] At decision block **200**, a determination is made whether a progressive win event has occurred. For example, another player playing a different gaming device may trigger a progressive win event. Other events may be also be used for triggering the progressive win event as discussed above. If a progressive win event has occurred, the player is an active player and qualifies for the shared progressive prize. The payout prize is then carried out at block **160** and as described more fully below in conjunction with FIG. **5**. If a progressive win event has not occurred decision block **210** is then carried out.

[0052] At decision block **210**, the enrollment module determines whether the countdown has been exceeded. If so, block **230** is then carried out. Otherwise block **220** is then carried out.

[0053] At block **220**, the countdown has not been exceeded, and the player's status is changed to "inactive." The status display **22** is updated to reflect the change of status. Block **120** is then repeated when a player places a wager. The gaming device **10** may communicate this change of status to the local controller **64** to update the player's status in the enrollment status database **78**.

[0054] Referring now to FIG. **5**, a logical flow diagram describing the payout process in accordance with the present invention is generally shown.

[0055] Block **160** is triggered from either block **150** or block **200** of FIG. **4**. Upon the progressive win event occurring block **300** is carried out.

[0056] At block **300**, the progressive win is reported to the progressive controller. The communication is typically sent by the gaming device **10** on which the progressive win event occurs.

[0057] At block **310**, the primary prize is paid to the player triggering the progressive win event. Normally this involves a casino attendant providing a "hand-pay" of the progressive amount to the player. "Hand-pay" for purposes of this application generally means the conventional understanding in the industry (e.g., completing the transaction away from gaming device between the player and a casino attendant and an exchange of documentation or forms).

[0058] At decision block **320**, a determination is made whether there are any active players. This determination can be made from the enrollment status database **78** and/or by querying each of the gaming devices participating in the system. If there are any active players, block **330** is then carried out. In some cases there will always be an active player if the player triggering the progressive win event qualifies as an active player.

[0059] At block **330**, the shared secondary prize is paid to each of the active players. If the shared secondary prize is in the form of credits or monies, the value may be directly credited to the meter of the gaming device **10**. In other cases, the shared amount may be paid by the attendant as a "hand-pay." In the example embodiment where the player receives expired points, coupons, prizes, the player may be issued the points, coupons, prizes, etc. through vouchers or other account systems. The expiration for the newly issued points, coupons, prizes, etc. is reset for a new expiration term.

[0060] At block **340** the payout process is completed. The above process may be used to payout both local prizes as well as WAC prizes, whether primary or shared secondary.

[0061] As described above, the secondary progressive prize may be funded using expired (or expiring) prizes (coupons, points, game pieces, etc.). By way of illustration, an example embodiment using a simple point structure is described herein, although embodiments utilizing other formats (coupons, game pieces, vouchers, etc.) are suitable for use with the present invention.

[0062] The expired points arrangement provides that points may be accumulated and earned by a player during normal game play of a gaming device, that the points may expire after certain time periods and/or when other conditions are met, and that the expired points may be re-issued to players in the form of shared progressive awards. In some cases, the points may be awarded pursuant to criteria independent of play of the gaming device (e.g., free promotional points, comp points, etc.).

[0063] To illustrate the an example point system, consider a slot machine version of a gaming device, were one of the reel symbols is a "silver" prize. Depending on the number of "silver" prizes aligning on a wagered payline, a player is awarded a number of "silver" points. The points may be accumulated by the player and once a certain number are collected, the points may be exchanged for a "silver level" prize. The points may be accumulated, for example, through a database such as a points account system, a player account system, or anonymously through a ticket/voucher system tracking points. Other prize levels, such as "gold" and "platinum" could also be implemented in a similar manner.

[0064] The points may further have an expiration period, such as thirty (30) days from issuance, for example. As described above, a "prize expiration and reissue module" operating in a local controller device or other central server machine (e.g., a prize server) may be used to track points, including expiration. Once points expire, the points may be added to a pool of points available for payout as a shared progressive prize as described above (i.e., funding the progressive prize). Using the example "silver" prize from above, the progressive triggering event may be five (5) "silver" symbols aligned on a wagered payline with maximum bet. When the progressive win event occurs, the primary progressive prize may be awarded to the player playing the gaming device triggering the win event, while the accumulated "expired points" may be awarded (re-issued) to "active" players as the shared secondary progressive prize. Upon re-issuance of the points, the expiration period may be reset, establishing a new expiration period for the re-issued points. These points may also expire and be accumulated again into another shared secondary progressive prize. Under this arrangement, the system provides means for utilizing and awarding points which would otherwise have been expired and unused. In yet another alternative arrangement, the expired points may also be used to fund the primary progressive prize as well as or instead of the secondary shared progressive prize.

[0065] Although the description above contains many specificities, these should not be construed as limiting the scope of the invention but as merely providing an illustration of the presently preferred embodiment of the invention. Thus the scope of this invention should be determined by the appended claims and their legal equivalents.

What is claimed is:

1. A progressive system for paying out a primary progressive prize and a secondary progressive prize, said progressive system comprising:

a progressive controller;

a plurality of game devices, each configured to execute a game of chance;

a network interconnecting said progressive controller and said plurality of game devices;

a funding module executable by said progressive controller, said funding module configured to:

maintain a primary progressive award and a secondary progressive award;

detect occurrence of a win event on any of said plurality of game devices;

award said primary progressive award upon occurrence of said win event; and

determine a distribution of said secondary progressive award upon occurrence of said win event;

a prize server; and

a prize expiration and reissue module executable by the prize server, said prize expiration and reissue module configured to:

determine an expiration period for a prize issued by at least one of said plurality of game devices; and

fund said prize to said secondary progressive award upon expiration of said expiration period.

2. A method for providing a primary progressive prize and a secondary progressive prize in a gaming system having a progressive controller coupled for communication to a plurality of game devices, said method comprising:

maintaining a primary progressive award by the progressive controller;

maintaining at least one secondary progressive award by the progressive controller;

monitoring each of the game devices for a primary progressive win event;

using the primary progressive win event to initiate distribution of the secondary progressive award;

determining an expiration period for prizes issued by the game devices;

funding the prizes to the secondary progressive award upon expiration of the expiration period.

* * * * *