M. E. GOOLSBY.

SURGICAL APPARATUS.

APPLICATION FILED AUG. 1, 1910.

**1,092,643.** Patented Apr. 7, 1914.

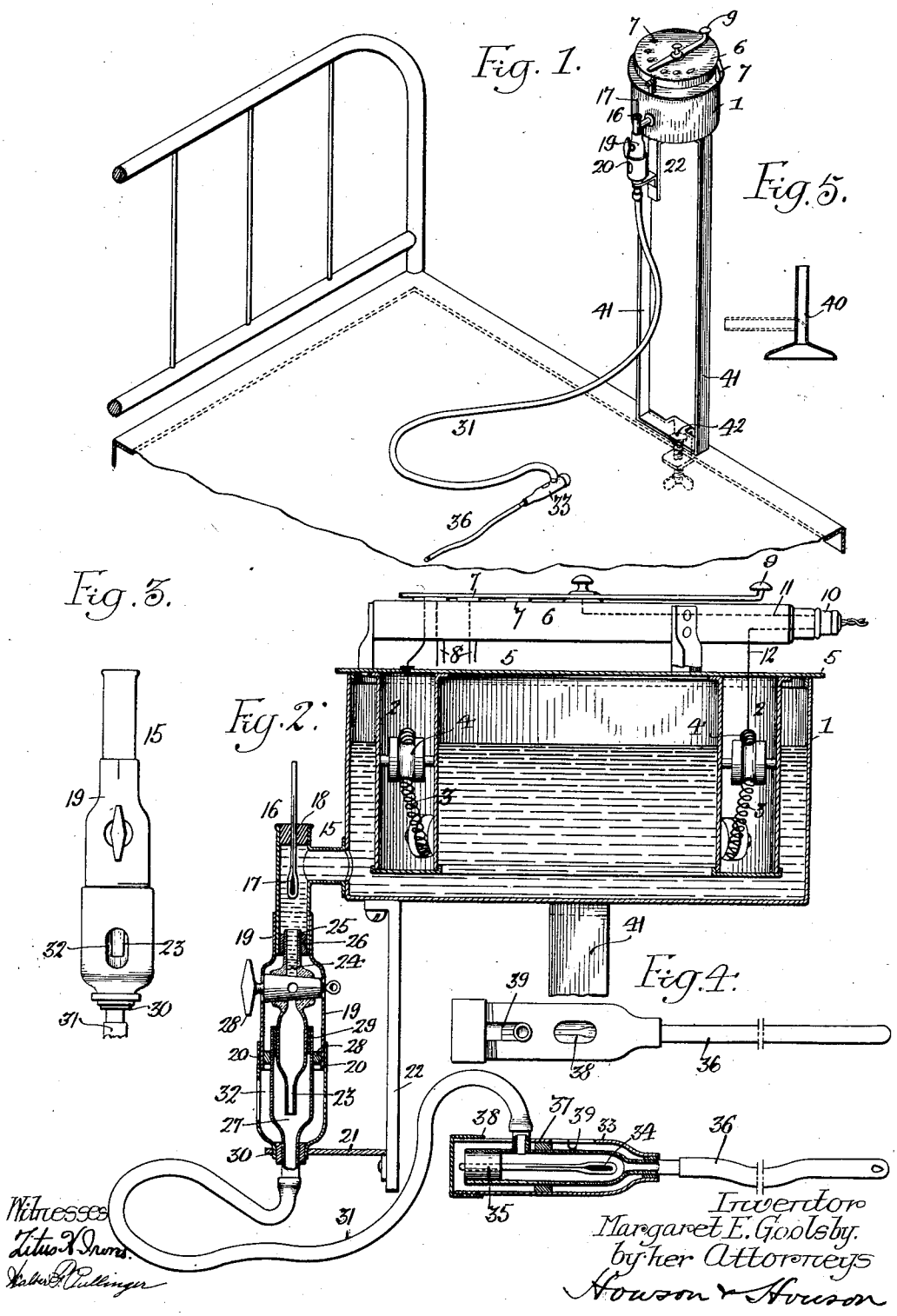


Witnesses
Titus N. Irons.
Walter G. Cullinger

Inventor
Margaret E. Goolsby.
by her Attorneys
Howson & Howson

COLUMBIA PLANOGRAPH CO., WASHINGTON, D. C.

# UNITED STATES PATENT OFFICE.

MARGARET E. GOOLSBY, OF ORLANDO, FLORIDA.

## SURGICAL APPARATUS.

1,092,643. Specification of Letters Patent. Patented Apr. 7, 1914.

Application filed August 1, 1910. Serial No. 574,760.

*To all whom it may concern:*

Be it known that I, MARGARET E. GOOLSBY, a citizen of the United States, and a resident of Orlando, Orange county, Florida, have invented an Improved Surgical Apparatus, of which the following is a specification.

The object of my invention is to provide an improved form of medical or surgical device available for use in treating passages of the human body, and my invention comprises an improved form of structure which may be employed as an irrigator, and being designed, when so used, to measure the fluid or liquid employed by drops. The apparatus forming the subject of my invention includes means for heating the liquid employed, means for determining the temperature of the liquid, both at the inlet point of feed and at the point of delivery adjacent the body of the patient, means for controlling the feed, means for enabling the operator to watch and count the drops delivered, and means for noting the temperature of the liquid. In addition, my improved structure may be employed as a feeder or dropper for liquid designed to moisten or dampen bandages, compresses and the like. These and other features of my invention are more fully pointed out hereinafter, reference being had to the accompanying drawings, in which:

Figure 1, is a perspective view illustrating apparatus embodying my invention in position with respect to a patient's bed; Fig. 2, is an enlarged sectional view of the structure, and Figs. 3, 4 and 5, are views illustrating details of my invention.

In the drawings, 1 represents a suitable reservoir or receptacle for the liquid employed, which reservoir may be of any desired character, and within this reservoir I may mount a heating element 2 which may be electically controlled, although it will be understood that any means may be employed for heating the liquid, and that in some instances, if desired for any purpose, means may be employed to cool the liquid. By employing an electrically operated heater, however, I am able to make use of the ordinary lighting circuit of a hospital or residence, greatly facilitating the use of my improved apparatus and tending to avoid unequal heating which might be occasioned by the use of a hot water or steam coil, or a lamp. It will be understood, however, that the heating may be accomplished by the means best suited to the particular occasion.

In the present instance, the heating element may comprise a casing dipping into the liquid within the receptacle 1; such casing inclosing a coil of wire 3 disposed in zigzag form and passing over insulating members 4. Carried by a cover 5 for said casing which may also form the cover for the liquid receptacle, is an ordinary enamel rheostat, the block of which is indicated at 6, having a series of contact points 7 in electrical connection with the wire coil 3 by means of wires 8, for instance, and the rheostat having the usual controlling handle 9. In addition the block 6 may carry a socket 10 to receive an ordinary plug having the usual current conducting wires 11 and 12 properly connected to the contact points 7 and the controlling handle 9.

Leading from the reservoir 1 is a delivery spout 15, having an upper opening 16 for the reception of a clinical thermometer 17 which is preferably carried by a suitable cork or stopper 18 fitting said opening 16. Connected to the spout 15, by frictional engagement if desired, is a shell 19, preferably made in two parts and threaded together at 20; which shell may be of metal or other suitable material, and may be supported by an arm 21 carried by a member 22 depending from the reservoir. Within this shell I mount a dropping attachment, which is preferably of glass, in order that its action may be observed, although it will be understood that it may be made of other material. This dropping attachment comprises a tubular member 23, fitted with a plug valve 24, and having an upper end 25 passing through a suitable stopper or cork 26 located in the lower end of the spout 15, the parts fitting tightly to avoid all danger of leakage, and the stopper or cork 26 forming a cushion to prevent breakage. Below the tubular member 23 is a cup-like receptacle 27, preferably of glass, into which the member 23 depends, with suitable packing 28 between the walls to prevent breakage, and the cup-like member is positioned in the shell 19 by a suitable washer or gasket 29 at its upper end and a washer or gasket 30 at its lower end; such washers also cushioning the receptacle to prevent breakage. Connected to the cup-like member is a section of hose or flexible tubing 31.

Both of the elements 23 and 27 are made of glass, and the valve is made of material suitable to be employed therewith. By

turning the latter the liquid flowing from the reservoir into the spout may be dropped into the cup-like member and pass thence to the hose or tubing 31. In order that the drops may be counted, the shell 19 may be apertured at 32.

At the free end of the hose or flexible tubing 31, a glass receptacle 33 may be attached, carrying a thermometer 34, which may be confined in place by a suitable cork or stopper 35 closing one end of said receptacle 33, and I may connect to the opposite end of such receptacle, which may be suitably reduced for the purpose, a soft rubber catheter 36. To protect this receptacle and afford in addition, a suitable handle for the operator, a shell of metal or other suitable material 37 may be provided for the receptacle 33, which shell is apertured at 38 to accommodate the inlet portion of said receptacle when inserting the same, and the shell may also be apertured at 39 for thermometer readings.

When the structure is employed as a means for keeping compresses, dressings and bandages in a damp or wet condition, I may employ a form of discharge tip as shown in Fig. 5, which is substantially a rose as indicated at 40, made of rubber, metal or other suitable material; the head being provided with a plurality of openings, as indicated, for the passage of the liquid. The stem is preferably flexible and movable to positions such as indicated by the dotted lines.

The reservoir 1 may be carried by suitable supporting legs 41, which may be clamped to the side of the bed, as indicated at 42 in Fig. 1; the reservoir being preferably disposed outside the bed with the dropping attachment adjacent the patient. The upper thermometer may be inclosed in a suitable protective casing.

I claim:—

1. The combination with a shell adapted to be connected to a liquid-containing reservoir, of a dropper disposed in said shell having its opposite ends of reduced diameter with a bulbous portion intermediate said ends, a cup-like receptacle within the casing fitting the bulbous portion of the dropper and inclosing the lower portion of the same, said shell having an internal gasket to which the upper reduced end of the dropper is tightly fitted, and said receptacle having its lower end tightly fitted to the shell, and having its upper end provided with an internal gasket adapted to form a tight joint with the dropper at a point a substantial distance above the lower end thereof, and a regulable valve carried by said dropper above its bulbous portion and controlling the flow of liquid through the dropper.

2. In surgical apparatus of the character described, a dropper and a cup-like receptacle inclosing the lower portion thereof, said dropper having contracted upper and lower alined passages and a turning plug valve mounted therebetween, and said cup-like receptacle being separable from the dropper and having an upper end of larger diameter than the lower end and adapted to closely embrace the dropper at a point above the contracted lower end thereof.

In testimony whereof, I have signed my name to this specification, in the presence of two subscribing witnesses.

MARGARET E. GOOLSBY.

Witnesses:
MURRAY C. BOYER,
WM. A. BARR.

Copies of this patent may be obtained for five cents each, by addressing the "Commissioner of Patents, Washington, D. C."