Jan. 14, 1958 J. J. REPHOLZ 2,819,546

DISPLAY CABINET

Filed Oct. 26, 1953 2 Sheets-Sheet 1

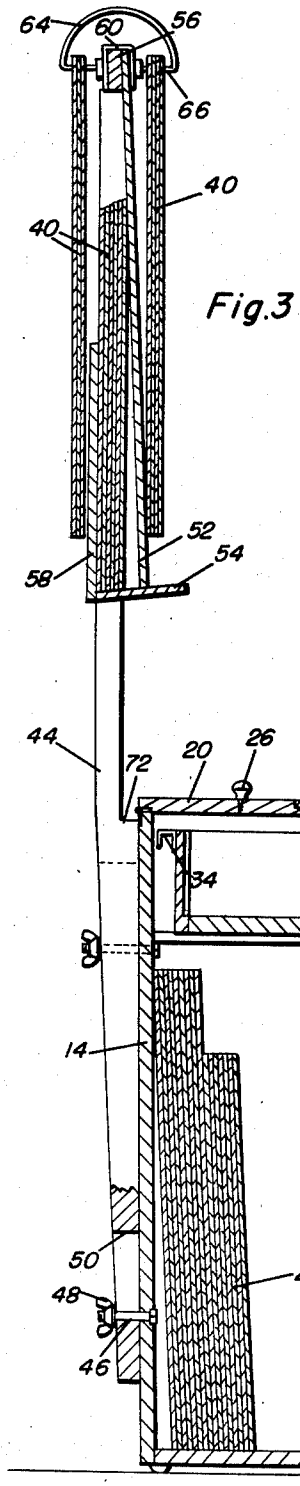

Fig. 3

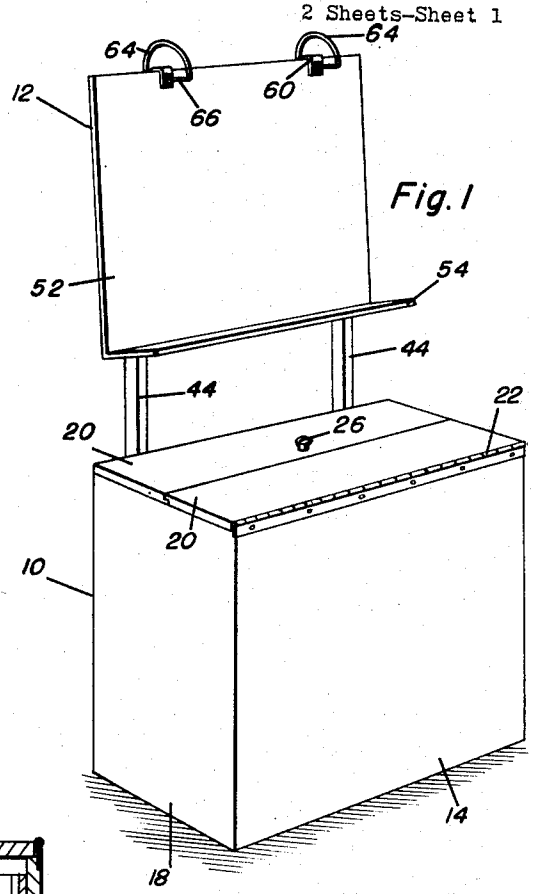

Fig. 1

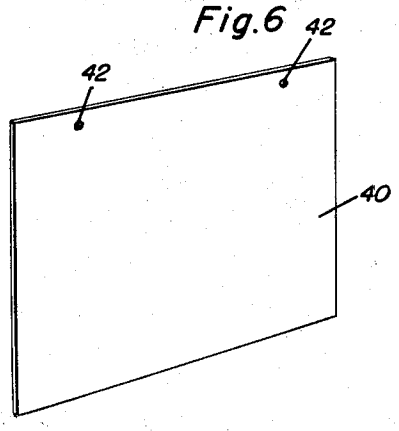

Fig. 6

Jacob J. Repholz
INVENTOR.

BY Clarence O'Brien and Harvey B. Jacobson
Attorneys

Jan. 14, 1958 J. J. REPHOLZ 2,819,546

DISPLAY CABINET

Filed Oct. 26, 1953 2 Sheets-Sheet 2

Fig.2

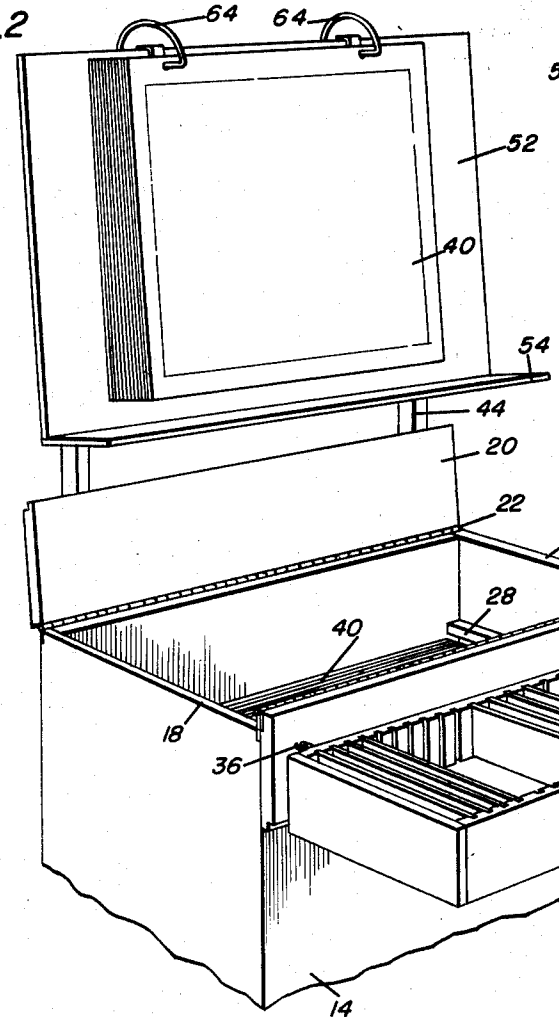

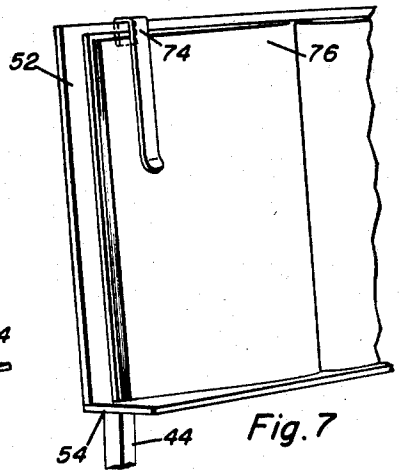

Fig.7

Fig.5

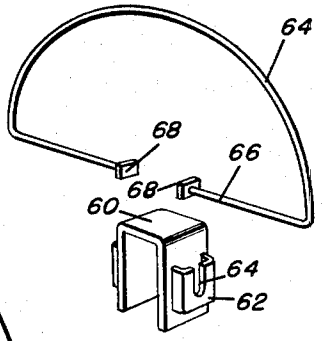

Fig.4

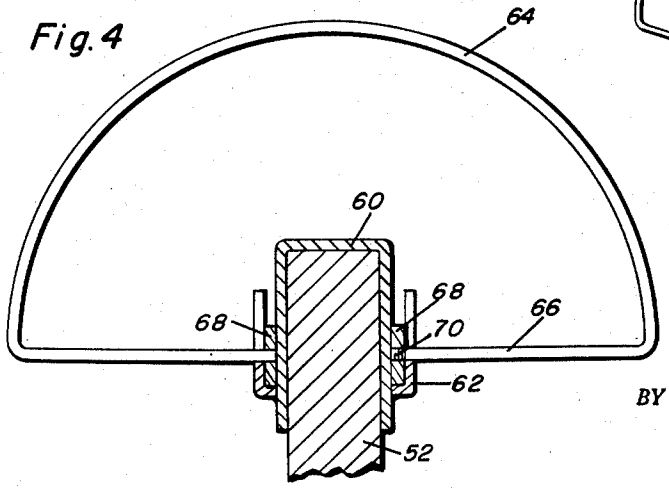

Jacob J. Repholz
INVENTOR.

BY Thomas A. O'Brien and Harvey B. Jacobson
Attorneys

United States Patent Office 2,819,546
Patented Jan. 14, 1958

2,819,546

DISPLAY CABINET

Jacob J. Repholz, Ingleside, Ill.

Application October 26, 1953, Serial No. 388,207

1 Claim. (Cl. 40—102)

This invention relates to a display cabinet and more specifically provides a receptacle for storage of display cards and a rack projecting thereabove for displaying the cards in an efficient and easily seen manner.

An object of this invention is to provide a display cabinet for storage of display cards and flash cards and a display rack secured to the storage receptacle and having means thereon for conveniently holding the cards for display purposes.

Another object of this invention is to provide a display cabinet including a receptacle having a storage compartment and a tray removably supported therein and a vertically disposed rack having a display surface and a pocket on the rear thereof for holding display cards and wherein a large illustrated or instructive book may be displayed on the rack.

A further object of this invention is to provide a display cabinet having novel means for removably securing the display cards to the display rack for sliding and pivotal movement thereon.

Yet another object of this invention is to provide a display cabinet which is simple in construction, efficient in operation, and inexpensive to manufacture.

These together with other objects and advantages which will become subsequently apparent reside in the details of construction and operation as more fully hereinafter described and claimed, reference being had to the accompanying drawings forming a part hereof, wherein like numerals refer to like parts throughout, and in which:

Figure 1 is a perspective view of the display cabinet of this invention with the receptacle in its closed position and the display cards disposed therein;

Figure 2 is a perspective view of the display cabinet of this invention with the receptacle and display rack in operative position;

Figure 3 is a transverse, vertical section taken substantially along the transverse center line of the construction shown in Figure 1 and showing details of the structure of the receptacle and display rack;

Figure 4 is an enlarged detail view showing the card mounting rings and a mounting clip therefor;

Figure 5 is a perspective detail view showing the connection between the mounting clips and wire ring;

Figure 6 is a perspective view of a single display card with the apertures adjacent the upper edge; and

Figure 7 is a detailed perspective view showing a clip holding a book on the rack.

Referring now specifically to Figure 1 of the drawings, it will be seen that the display cabinet of this invention includes a receptacle generally denoted by the numeral 10 and a display rack generally denoted by the numeral 12 mounted on the receptacle 10 and projecting vertically thereabove. The receptacle includes side walls 14, a bottom wall 16, end walls 18, and a pair of closure members 20 pivotally secured to adjacent side walls by suitable hinges 22 whereby the closure members 20 effectively close the top of the receptacle 10. Each of the closure

members 20 has a width substantially one-half the depth of the receptacle 10 and includes matching recessed portions generally indicated by the numeral 24 at their joining surfaces for effectively closing the receptacle 10. A suitable drawer pull knob 26 is positioned on the closure member 20 which has the projecting recess portion 24 beneath the projecting portion of the other closure member 20, wherein a pull on the knob 26 will raise both of the closures 20 about the piano hinge 22.

A ledge member 28 is positioned on the side walls 18 at a point spaced below the top edges of the walls, and an elongated tray 30 is positioned thereon, and it will be seen that the interior side walls of the tray 30 include a plurality of vertically extending slots 32 in horizontal spaced relation for receiving flash cards or classifying the same. The tray 30 is provided with a pair of hook members 34 secured to the upper edge of one of the side members, and one of the closure members 20 is provided with a pair of eye members 36 on its undersurface when in its closed position wherein the eye members 36 are facing outwardly when the closure member is pivoted about the hinge 22 to a position substantially flush against the side wall 14. The hooks 34 engage the eye member 36 for supporting the tray in an accessible position wherein the flash cards 38 or the like may be easily removed from the tray 30. It will be seen that the portion of the receptacle 10 below the ledges 28 may be used for storing suitable charts or cards generally indicated by the numeral 40 and specifically shown in Figure 6 wherein each of the charts or cards 40 includes a pair of spaced openings 42 adjacent the upper edge of the cards 40. It will be understood that the spacings between the apertures 42 vary with the cards due to the differences in size and design.

A pair of vertical uprights 44 are secured to the rear wall 14 by suitable fastening means, such as bolts 46 and wing nuts 48. Elongated slots 50 are positioned in the uprights 44 and the bolts 46 pass therethrough wherein the uprights 44 may be adjusted vertically of the receptacle 10 by manipulation of the wing nuts 48 to secure the uprights in adjusted position.

Secured to and bridging the front portions of the uprights 44 is a display rack 52 having a forwardly projecting ledge 54 along its lower edge and a bracing member 56 at its upper edge which is substantially flush with the upper edge of the display rack 52 and engages the upper end of the vertical upright supports 44. A pocket forming member 58 is secured to the rear surfaces of the uprights 44 and extending therebetween in spaced relation to the rack member 52, and it will be seen that a center portion of the projecting ledge 54 is secured to the bottom portion of the pocket forming member 58 wherein cards 40 may be positioned in the pocket formed by the rear surface of the rack 52, the surface of the pocket forming member 58 and the bottom ledge 54.

Referring now specifically to Figures 4 and 5, it will be seen that a U-shaped clip 60 is removably positioned over the upper edge of the rack 52 for adjustment along the edge of the rack 52 and upwardly opening pockets 62 are formed on each leg of the U-shaped clip 60 and the outer side of the pocket 62 has an open-ended slot 63 extending downwardly from the free upper edge of the pocket 62. A generally semi-circular wire member 64 having inturned horizontal end portions 66 with polygonal enlarged adjacent ends 68 is removably secured to the U-shaped clip 60 by inserting the polygonal ends 68 into the pocket 62 with the horizontal portion 66 extending through the slot 63. It will be seen that the horizontal portion 66 spaces the semi-circular portion 64 from the U-shaped clip 60 and the rack 52.

It will be noted that one of the polygonal end portions 68 is removably attached to the horizontal portion 66 by

the use of a screw threaded connection generally indicated by the numeral **70**. It will be seen that a pair of U-shaped clips **60** and semi-circular members **64** are provided on the upper edge of the rack **52** for supporting the cards **40** with the horizontal portion **66** slidably supporting the cards by virtue of the horizontal portion **66** being received in the apertures **42**. As clearly seen in Figure 3, the cards **40** may be positioned on the horizontal member **66** and pivoted along the semi-circular member **64** to a position behind the rack wherein a new card will be displayed on the rack. The cards **40** may be easily placed on the horizontal support portion **66** by simply removing the polygonal end member **68** which is threaded to the horizontal portion **66** by the screw threads **70**. Any suitable indicia or display may be placed on the cards **40** as desired, and an instructor may easily manipulate the cards for more efficient and accurate teaching of an idea or the like. The display cabinet of this invention provides adequate storage space for the display and flash cards wherein the cards are protected from mutilation and damage as well as loss which is usually encountered in this type of display device. The lateral distance between the semi-circular wire members **64** may be adjusted by moving the U-shaped clip **60** wherein various sized cards **40** may be accommodated, wherein the device may be used for a variety of purposes. It will be seen that one of the closure members **20** rests against the forward surface of the upright members **44** when in its open position, and a recessed portion **72** is cut out of the forward surface of the upright portions **44** for receiving the adjacent edge of the closure member **20** when in its open position.

As shown in Figure 7, it will be seen that a clip **72** is positioned over the upper edge of the rack **52** for securing an illustrated book **76** to the rack **52**. Obviously, the clip may be utilized to hold the book covers or the book pages.

The particular material used in the construction of this device may be of any suitable wood or metal which readily presents itself to an economic construction as well as one which is durable and long wearing. Obviously, suitable handles may be employed where desired

for transporting the device and the particular size of the device may be determined with respect to the needs of each particular association of elements and with respect to the particular size of the charts or cards to be displayed.

From the foregoing, the construction and operation of the device will be readily understood and further explanation is believed to be unnecessary. However, since numerous modifications and changes will readily occur to those skilled in the art, it is not desired to limit the invention to the exact construction shown and described, and accordingly, all suitable modifications and equivalents may be resorted to, falling within the scope of the appended claim.

What is claimed as new is as follows:

In a display device, a rack for suspending display cards over a storage receptacle comprising a pair of uprights attachable to said receptacle to extend above the same in laterally spaced relation, a horizontal brace member extending between and connecting the upper ends of said uprights, vertical clips of inverted U-shape fixed to and straddling said brace member, substantially semi-circular wire members straddling said clips in vertical position and having inturned horizontal portions on opposite sides of the clips for insertion through apertured display cards to suspend said cards at opposite sides of the brace member, upwardly opening rectangular pockets on opposite sides of the clips, and enlarged rectangular terminals on said inturned portions nonrotatably fitted in said pockets and slidable upwardly out of said pockets.

References Cited in the file of this patent

UNITED STATES PATENTS

941,084	Marsh	Nov. 23, 1908
1,397,577	Engelland	Nov. 22, 1921
1,522,409	Berry	Jan. 6, 1925
1,711,070	Svydam	Apr. 30, 1929
1,761,661	Dunning	June 3, 1930
1,774,721	Morris	Sept. 2, 1930
1,825,458	Hoffman	Sept. 29, 1931
2,380,780	Novak	July 31, 1941