No. 638,394. Patented Dec. 5, 1899.

A. E. JOHNSON.

INSOLE SLITTING AND CHANNELING AND LIP TURNING MACHINE.

(Application filed Mar. 23, 1899.)

(No Model.) 6 Sheets—Sheet 1.

Fig. 6.

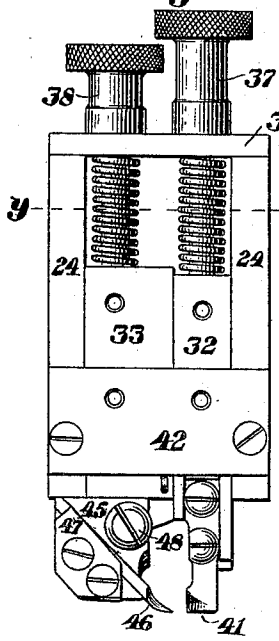

Fig. 5.

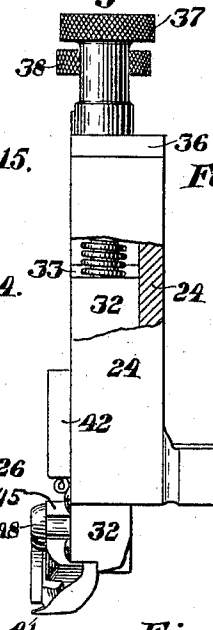

Fig. 7.

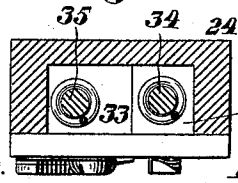

Fig. 15.



Fig. 14.

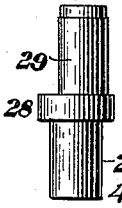

Fig. 20.

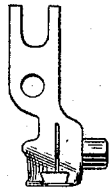

Fig. 21.

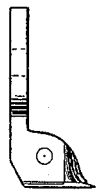

Fig. 1.

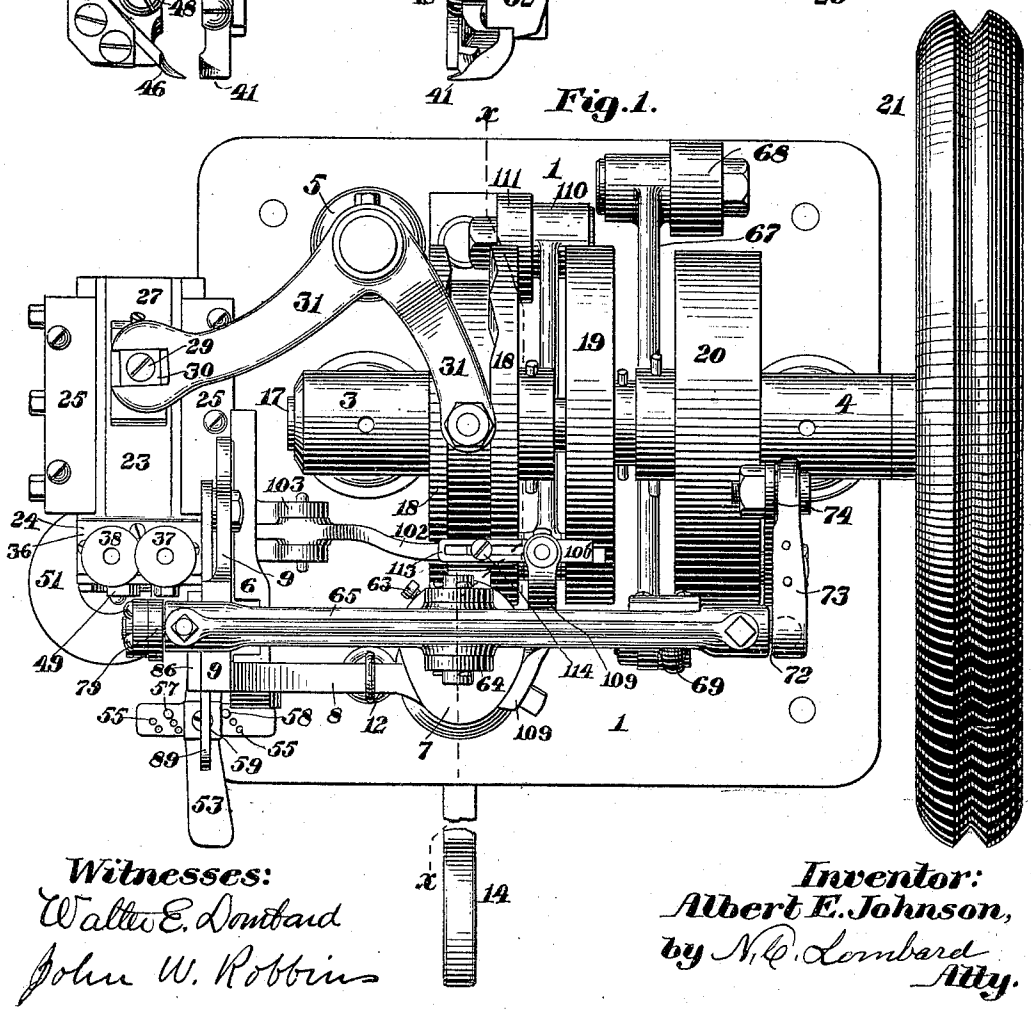

Witnesses:
Walter E. Dunbar
John W. Robbins

Inventor:
Albert E. Johnson,
by N. C. Lombard
Atty.

THE NORRIS PETERS CO., PHOTO-LITHO., WASHINGTON, D. C.

No. 638,394. Patented Dec. 5, 1899.

A. E. JOHNSON.

INSOLE SLITTING AND CHANNELING AND LIP TURNING MACHINE.

(Application filed Mar. 23, 1899.)

(No Model.) 6 Sheets—Sheet 2.

Fig. 22.

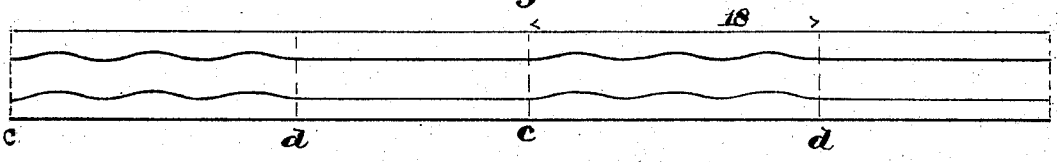

Fig. 2.

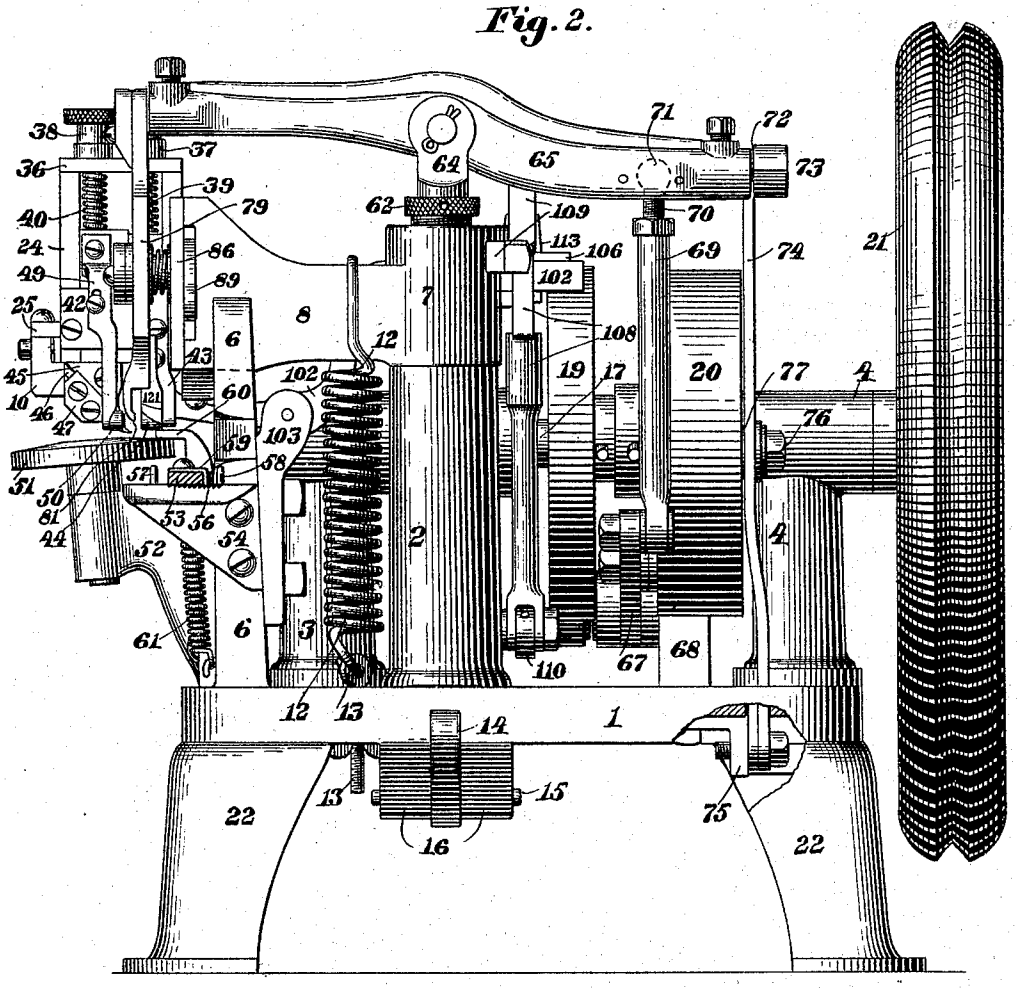

Witnesses:
Walter E. Lombard
John W. Robbins

Inventor:
Albert E. Johnson,
by N. G. Lombard
Atty.

THE NORRIS PETERS CO., PHOTO-LITHO., WASHINGTON, D. C.

No. 638,394. Patented Dec. 5, 1899.

A. E. JOHNSON.

INSOLE SLITTING AND CHANNELING AND LIP TURNING MACHINE.

(No Model.) (Application filed Mar. 23, 1899.) 6 Sheets—Sheet 3.

Fig. 8.

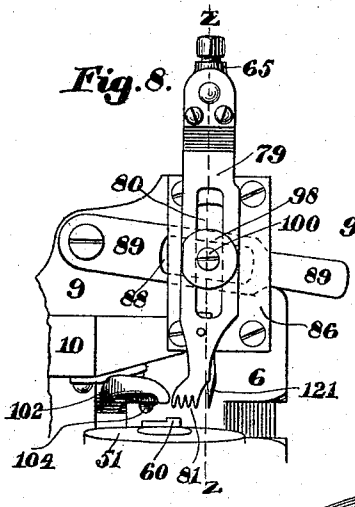

Fig. 12.

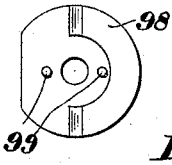

Fig. 11.

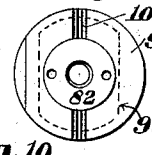

Fig. 10.

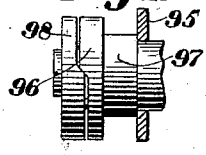

Fig. 9.

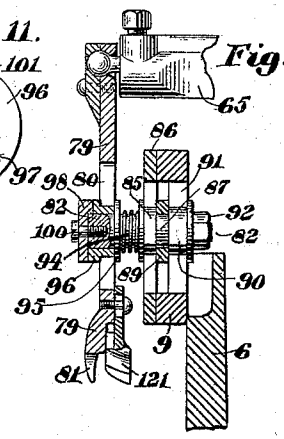

Fig. 3.

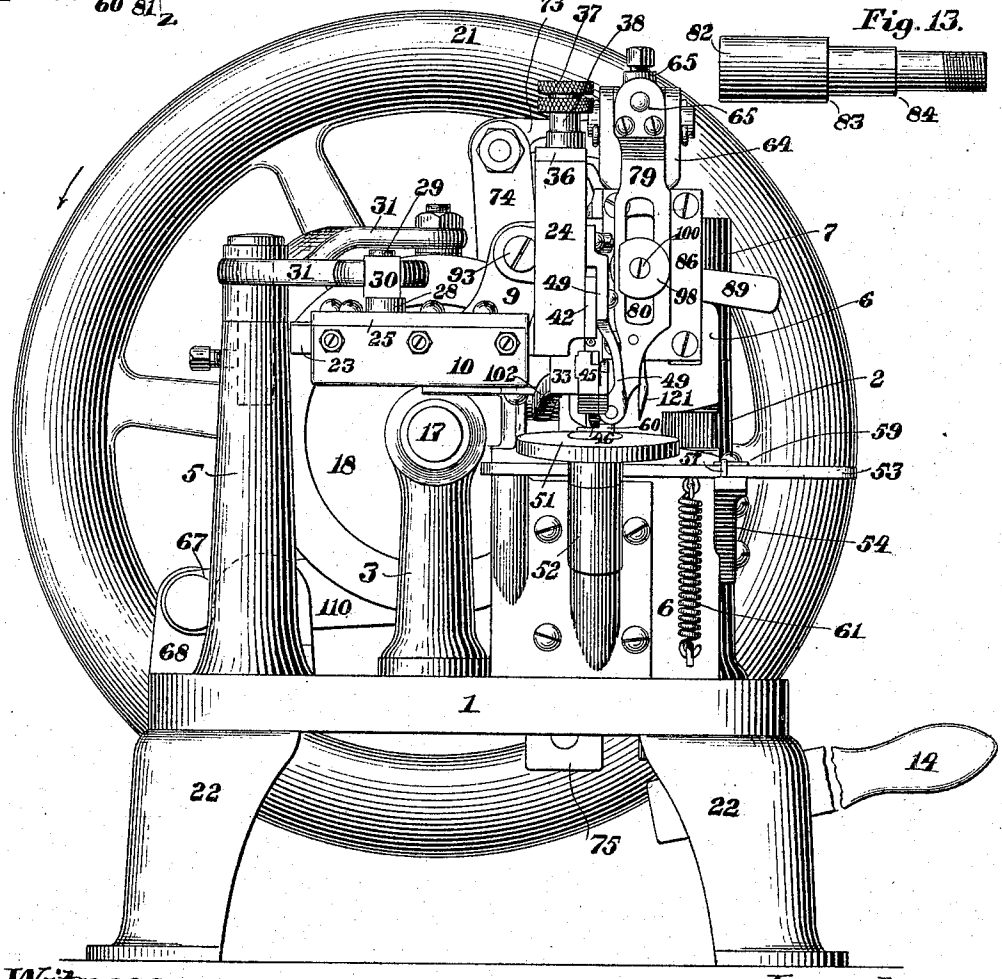

Fig. 13.

Witnesses:
Walter E. Lombard
John W. Robbins

Inventor:
Albert E. Johnson,
by N. E. Lombard
Atty.

THE NORRIS PETERS CO., PHOTO-LITHO., WASHINGTON, D. C.

No. 638,394. Patented Dec. 5, 1899.

A. E. JOHNSON.

INSOLE SLITTING AND CHANNELING AND LIP TURNING MACHINE.

(No Model.) (Application filed Mar. 23, 1899.) 6 Sheets—Sheet 4.

Fig. 19.

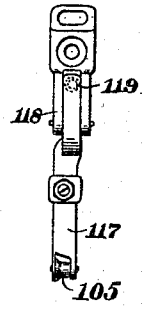

Fig. 16.

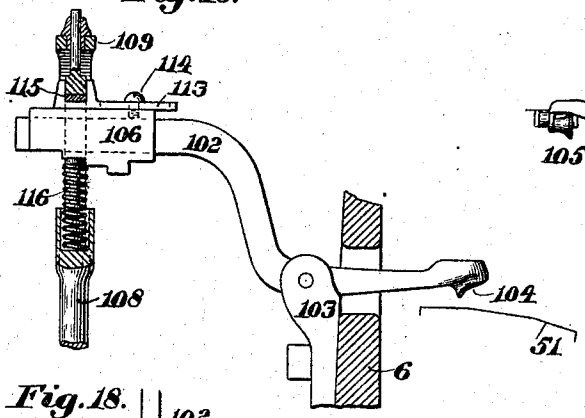

Fig. 17.

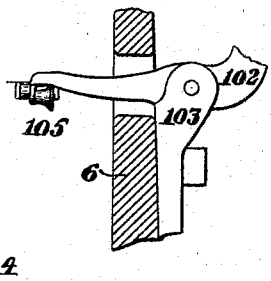

Fig. 18.

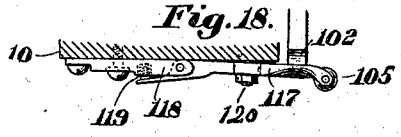

Fig. 4.

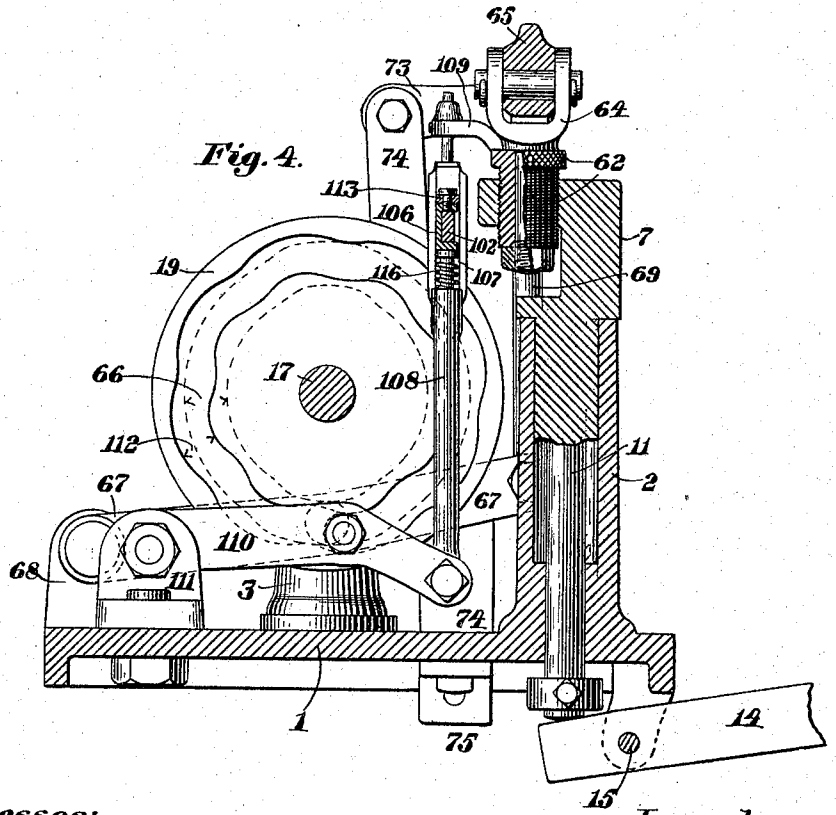

Witnesses:
Walter E. Lombard
John W. Robbins

Inventor:
Albert E. Johnson,
by N. P. Lombard
Atty.

THE NORRIS PETERS CO., PHOTO-LITHO., WASHINGTON, D. C.

No. 638,394. Patented Dec. 5, 1899.

A. E. JOHNSON.

INSOLE SLITTING AND CHANNELING AND LIP TURNING MACHINE.

(Application filed Mar. 23, 1899.)

(No Model.) 6 Sheets—Sheet 5

Fig. 23.

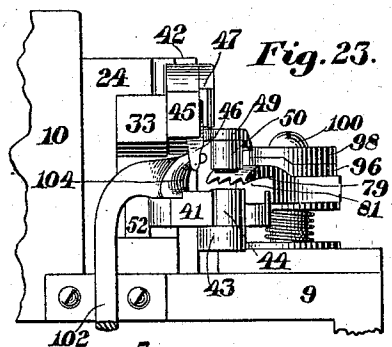

Fig. 24.

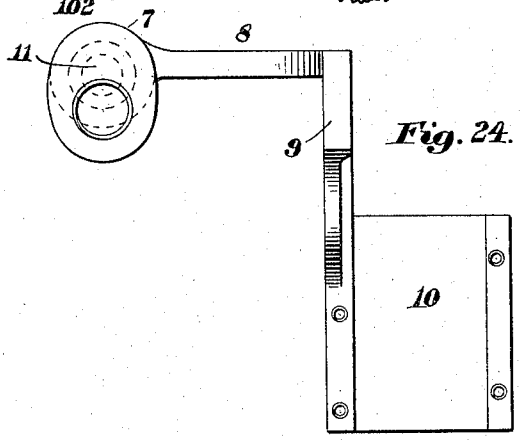

Fig. 27.

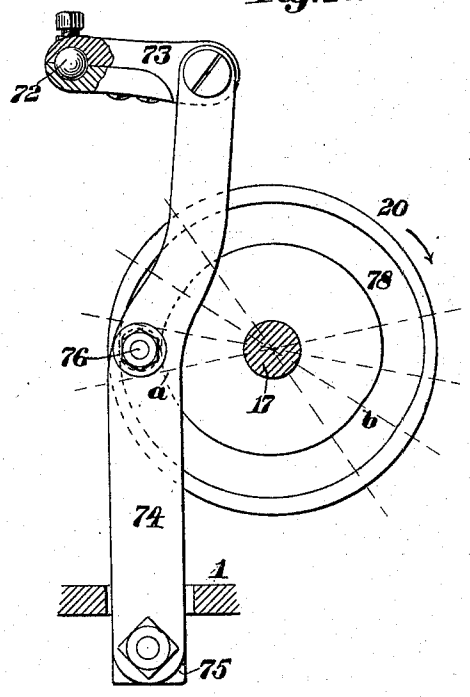

Fig. 25.

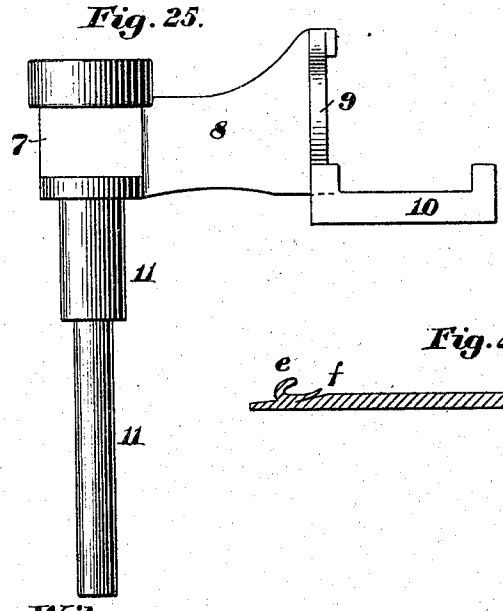

Fig. 26.

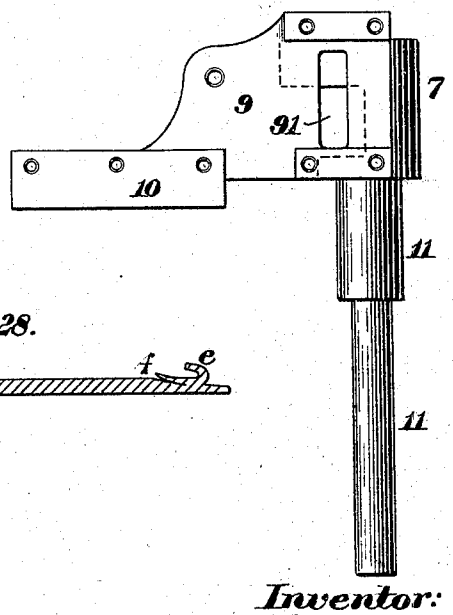

Fig. 28.

Witnesses:
Walter E. Lombard.
John W. Robbins

Inventor:
Albert E. Johnson,
by N. D. Lombard Atty.

THE NORRIS PETERS CO., PHOTO-LITHO., WASHINGTON, D. C.

No. 638,394. Patented Dec. 5, 1899.

A. E. JOHNSON.

INSOLE SLITTING AND CHANNELING AND LIP TURNING MACHINE.

(No Model.) (Application filed Mar. 23, 1899.) 6 Sheets—Sheet 6.

Fig. 29.

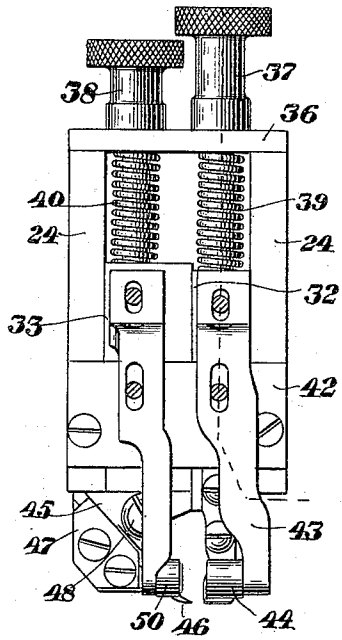

Fig. 30.

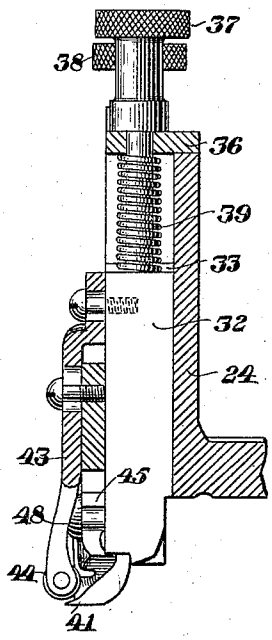

Witnesses:
Walter E. Lombard
Jerome A. Bacon

Inventor:
Albert E. Johnson,
by N. C. Lombard
Atty.

THE NORRIS PETERS CO., PHOTO-LITHO., WASHINGTON, D. C.

UNITED STATES PATENT OFFICE.

ALBERT E. JOHNSON, OF BROCKTON, MASSACHUSETTS, ASSIGNOR TO THE ECONOMY MACHINE COMPANY, OF PORTLAND, MAINE.

INSOLE SLITTING AND CHANNELING AND LIP-TURNING MACHINE.

SPECIFICATION forming part of Letters Patent No. 638,394, dated December 5, 1899.

Application filed March 23, 1899. Serial No. 710,160. (No model.)

To all whom it may concern:

Be it known that I, ALBERT E. JOHNSON, of Brockton, in the county of Plymouth and State of Massachusetts, have invented certain new and useful Improvements in Insole-Channeling and Lip-Turning Machines, of which the following, taken in connection with the accompanying drawings, is a specification.

This invention relates to insole-channeling and lip-turning machines; and it consists in certain novel features of construction, arrangement, and combination of parts, which will be readily understood by reference to the description of the accompanying drawings and to the claims hereto appended and in which the invention is clearly pointed out.

Figure 1 of the drawings is a plan of a machine illustrating my invention. Fig. 2 is a front side elevation of the same. Fig. 3 is an end elevation. Fig. 4 is a vertical section on the irregular line *x x* on Fig. 1. Fig. 5 is a sectional inner side elevation of the channel-cutting tools, their stocks, and the horizontally-reciprocating slide in which said stocks are mounted. Fig. 6 is an elevation of the same parts, looking at the left side of Fig. 5. Fig. 7 is a transverse section on line *y y* on Fig. 6. Fig. 8 is a side elevation of the feed-arm, the lip-severing cutter, the means for varying the feed, and the hammer for completing the turning of the lip. Fig. 9 is a sectional elevation of the same parts, the cutting-plane being on line *z z* on Fig. 8. Figs. 10, 11, and 12 are details of the device employed to move the lower end of the feed-arm toward the rear to press the sole edge against the gage. Fig. 13 is an elevation of the stud upon which is mounted the cam-disks for moving the lower end of the feed-arm toward the gage, drawn to an enlarged scale. Figs. 14 and 15 are respectively an elevation and an end view of the eccentric for adjusting the tool-carrying slide toward the front or rear of the machine. Fig. 16 is an elevation of the lip turning and setting hammer, its handle or lever, and the means for varying the blow to be struck thereby. Figs. 17, 18, and 19 are details illustrating a modification of said hammer and its operating-lever. Figs. 20 and 21 are respectively a front and a side elevation of a modified form of the cutter for splitting the edge of the sole and partially turning the lip formed thereby. Fig. 22 is a development of the periphery of the cylinder-cam for reciprocating the channel-cutting knives. Fig. 23 is an inverted plan of the feed-arm, the lip-severing cutter secured thereto, the pressure-rolls, the channel-cutters, and the hammer for completing the turning of the lip and setting the same. Figs. 24, 25, and 26 are respectively a plan, a rear elevation, and an end elevation looking toward the hand or driving wheel of the vertically-movable bracket which carries all of the operating-tools except the lip turning and setting hammer. Fig. 27 is an elevation of the cam-disk 20 and the lever operated thereby looking toward the left of Fig. 2. Fig. 28 is a transverse section of an insole channeled by my machine, and Figs. 29 and 30 are respectively a front elevation and a vertical section of the horizontally-reciprocating slide and the tool-carrying stocks and illustrate the manner of adjustably securing the pressure-roll-carrying arms to said stocks.

In the drawings, 1 represents the bed or table of the machine, having formed in a piece therewith or secured thereto the columns 2, 3, 4, and 5 and the upwardly-projecting plate 6.

A stand or bracket, comprising the hub 7, the horizontal arm 8, the rearwardly-projecting plate 9, and the grooved plate 10, is mounted, by means of the downwardly-projecting shank or stem 11, in a bearing in the column 2 in such a manner that it may be moved vertically therein against the tension of the spring 12, one end of which is secured to said arm 8 and its other end to the eyebolt 13, adjustably set in the bed 1 by means of the hand-lever 14, fulcrumed on the pin 15, set in the downwardly-projecting ears 16, and engaging at its inner end the lower end of the stem 11, as shown in Figs. 2 and 4.

A shaft 17 is mounted in bearings 3′ and 4′ in the upper ends of the columns or standards 3 and 4, has mounted thereon between said bearings the cylinder-cam 18 and the cam-disks 19 and 20, and upon its end outside of the bearing 4′ the hand or driving wheel 21, the rim of which is grooved to re-

ceive a round belt (not shown) for imparting rotary motion thereto in the direction indicated by the arrow on Fig. 3.

The bed 1 is supported upon legs 22, which are intended to be firmly secured to a bench or other suitable support (not shown) at a convenient height for operation.

The grooved plate 10 has fitted therein, so as to be movable toward and from the front side of the machine, the slide 23, having at its front end the upwardly-projecting plate 24, in the front face of which is formed a rectangular groove extending from top to bottom thereof, as shown. Cap-plates 25 are secured to the upper surface of the plate 10 and overlap the slide 23 and serve to complete the guideway for said slide. The upper surface of the slide 23 has set therein a pin 26 in such a manner as to be movable about its axis and is secured in the desired adjusted position by means of the set-screw 27. (Shown in Figs. 1 and 5.) The pin 26 is provided with a collar 28 to rest upon the upper surface of the slide 23, above which projects the eccentric 29, upon which is fitted the rectangular block 30, which is engaged by the forked end of one arm of the elbow-lever 31, fulcrumed upon a pin set in the upper end of the column 5 and carrying at the end of its other arm a cam-truck fitted to and acted upon by the cam-path formed in the periphery of the cylinder-cam 18, as shown in Fig. 1. The path of the cam 18 has two sets of zigzag throws, each set comprising three throws in each direction, said two sets being separated upon opposite sides of said cam by a standstill, each occupying a little less than one-quarter of the circumference of the cam-cylinder, as shown in Fig. 22.

The groove in the front face of the upwardly-projecting plate 24 of the slide 23 has fitted therein, so as to be vertically movable, the two bars or stocks 32 and 33, provided, respectively, with the shanks 34 and 35, which project upward through the cap-plate 36 and have adjustably fitted upon their threaded upper ends the stop-nuts 37 and 38, respectively, said shanks 34 and 35 being surrounded between said cap-plate 36 and the upper ends of the rectangular portions of the stocks 32 and 33 with the coiled springs 39 and 40, respectively, all as shown in Figs. 2, 5, and 6.

The stock 32 has secured to its lower end the cutter 41, the cutting edge of which extends at right angles to the line of feed, and is provided just at the rear of said cutting edge with an inclined plowshare-like surface, adapted to turn upward the lip of material formed by said cutter in splitting the edge of the sole.

The stocks 32 and 33 are guided in their upward and downward movements by the shanks 34 and 35 and the side plate 42, and the stock 32 has secured thereto and vertically adjustable thereon and movable therewith the pendent arm 43, which carries at its lower end a pressure roll or surface 44 to bear upon the sole in front of the cutter 41, said arm 43 being secured to said stock 32 in its adjusted position by a clamping-screw which passes through a slot in said arm and is screwed into said stock until its head presses hard upon said arm, said arm being guided in its vertical movements and prevented from moving about said clamping-screw by a second screw which passes through another slot in said arm and is screwed into the plate 42, but without pressing upon said arm, thus leaving said arm free to be moved up and down with said stock 32, while it may be adjusted vertically upon said stock by slackening said clamping-screw, moving said arm up or down, as desired, and then tightening said screw again, all as shown in Figs. 29 and 30.

The stock 33 has secured to its lower end, so as to be adjustable transversely of said stock, the block 45, having formed in its front face an inclined slot, in which is fitted the cutter 46, which is secured in the desired adjusted position relative to the cutter 41 by means of the clamping-plate 47 and suitable clamping-screws. The block 45 has its inner edge slotted to receive the binding-screw 48, as indicated in Figs. 5 and 6.

The stock 33 has secured thereto and vertically adjustable thereon and movable therewith in the same manner as the arm 43 is secured to the stock 32 (see Figs. 29 and 30) the pendent arm 49, which carries at its lower end a pressure roll or surface 50, arranged to press upon the sole in front of the cutter 46, said pressure-surfaces 44 and 50 serving to press the sole being operated upon into firm contact with the sole-supporting disk 51, which is mounted and revoluble in a bearing in the stand 52, secured to the upright plate 6, as shown in Figs. 2 and 3.

The stand 52 has pivoted thereto by its rear end the hand-lever 53, the front end of which rests upon the bracket 54, secured to and projecting laterally from the upright plate 6 and having formed in its upper edge two series of holes 55 and a series of ratchet-teeth 56, as shown in Figs. 1 and 2. Two pins 57 and 58 are interchangeably set in the holes 55 to limit the movement of the lever 53 in both directions, and said lever has secured in a fixed position thereon the pawl 59, which engages with the ratchet-teeth on said bracket 54, so that the lever may be adjusted to intermediate positions between the extremes of its movement.

Directly to the right of the center of the work-support 51 the lever 53 has formed thereon or secured thereto the gage 60, which projects over the upper surface of the sole-support to a greater or less distance, according to the adjustment of the lever 53, said lever being held in firm contact with the bracket 54, with the pawl 59 engaging one or another of the ratchet-teeth 56, by the spring 61, as shown in Figs. 2 and 3.

The hub 7 of the tool-carrying bracket has adjustably set therein the threaded bushing

62, which is secured in its adjusted position by the set-screw 63, (see Fig. 1,) and has secured therein, so as to be movable about its axis, the forked stud 64, in the forked end of which is pivoted the lever 65, to which a vertical vibration is imparted by the cam-path 66 (shown in dotted lines in Fig. 4) acting upon a cam-truck carried by the lever 67, pivoted at its rear end to the stand 68 and connected at its front end to the link 69, the upper end of which has adjustably set therein the screw-stud 70, having a ball at its upper end, which is fitted to a socket formed in said lever at 71.

The extreme right-hand end of the lever 65 has adjustably set therein a stud 72, having a ball at its end fitted to a socket in the front end of the link 73, the rear end of which is pivoted to the upper end of the lever 74, which in turn is pivoted to the stand 75, secured to the under side of the bed 1, as shown in Figs. 2, 3, and 4.

The lever 74 has set therein near the middle of its length the stud 76, upon which is mounted a truck 77, which is acted upon by the path 78 of the cam-disk 20 to impart a lateral vibration to the lever 65 for the purpose of feeding the sole.

The left-hand end of the lever 65 is connected by a ball-and-socket joint to the upper end of the feed-arm 79, the middle portion of which has cut through it the longitudinal slot 80 to receive the adjustable fulcrum, about which said arm vibrates, and has formed upon its lower end one or more feed-points 81, which enters the sole just inside of the channel-cutter 41, said feed-points being located and movable in the direction to feed the sole in the narrow space between cutter 41 and pressure-roll 44 on one side and the cutter 46 and the pressure-roll 50 on the other side, as shown in Figs. 2 and 23.

The fulcrum-pin 82, about which the feed-arm vibrates, is provided with the shoulders 83 and 84, as shown in Fig. 13, and has fitted thereon the bushing 85, which bears against the shoulder 83 and has its two opposite sides flattened, so as to fit the vertical slot in the cap-plate 86, has loosely fitted thereon the washer 87, fitted in the slot 88 in lever 89, and also has fitted thereon against the shoulder 84 the flat-sided bushing 90, the flat sides of which engage the sides of the vertical slot 91, formed in the plate 9 of the vertically-movable tool-carrying bracket, which latter bushing is clamped against the shoulder 84 by the nut 92, as shown in Fig. 9.

The fulcrum-pin 82 is prevented from moving about its axis by the flat sides of the bushing 90 engaging the sides of the slot 91, while it is free to be moved vertically therein by the vibratory movement of the lever 89, which is pivoted at 93 to the plate 9.

The pin 82 has loosely mounted thereon outside of the plate 86 the spring 94, the washer 95, and the cam-disk 96, having a flat-sided hub 97, which fits into the slot 80, formed in the feed-arm 79, so as to be moved about the axis of said pin to a limited extent by the vibration of said feed-arm. Another cam-disk 98, the inner face of which is a counterpart of the outer face of the cam-disk 96, is firmly secured to the end of said pin 82 by means of the pins 99, which enter suitable holes in said pin 82, and the clamping-screw 100, so as to be non-revoluble, the office of said cam-disks being to cause a slight inward movement of the lower end of the feed-arm as it is vibrated to insure the edge of the sole being held in contact with the gage 60, this being accomplished by the action of the inclined plane or cam-surface 101 on the disk 96 upon a corresponding surface on the disk 98, which causes said disk 96 and the feed-arm 79 to be moved inward against the tension of the spring 94.

A lever 102 is pivoted to the stand 103, secured to the inner surface of the upright plate 6, and has formed upon or connected with its left-hand end a hammer for setting the upturned lip of the outer channel, which hammer may be a non-revoluble piece of metal having a curved operating-surface 104, (see Fig. 16,) or it may be a roll having its surface curved in the direction of its length, as shown at 105 in Figs. 17, 18, and 19. The lever 102 extends toward the right of Figs. 1 and 2 and has adjustably secured to its right-hand arm the grooved block 106, which, with said lever 102, extends through a slot 107 in the link 108, the upper end of which has a bearing in the stand 109, secured to the hub 7, and the lower end of which is pivoted to the front end of the lever 110, the rear end of which is pivoted to the stand 111 and carries near the middle of its length a cam-truck which is acted upon by the cam-path 112, as shown in Fig. 4, to impart to said link 108 a series of rapid vertical reciprocations to each revolution of the shaft 17 and a corresponding series of vibrations of the lever 102.

The upper end of the slot 107 has fitted therein the forked end of the slotted arm 113, to which the block 106 is adjustable, secured by the screw 114, and a block of leather 115 is inserted in the fork of said arm between it and the upper end of said slot 107 to act as a cushion to deaden the blow when the link 108 is moved downward, and the lower end of said slot 107 has set therein the coiled spring 116, the upper end of which rests against the under side of the block 106, and thus renders the blow given by the hammer 104 a yielding or elastic one. The lower edge of the block 106 is composed of four different bearing-surfaces for the spring 116 to act against, said surfaces being arranged at different levels, so that by adjusting said block on the lever 102 the blow to be struck by the hammer may be varied from a heavy to a light blow, or so that no blow will be struck upon the channel-lip of the sole.

In the modified hammer illustrated in Figs. 17, 18, and 19 the hammer-roll 105 is mounted on a journal set in the forked end of the lever

117, pivoted to the plate 118, secured to the under side of the plate 10, a spring 119 being interposed between the plate 118 and the rear end of the lever 117 to normally hold the hammer-roll in a raised position, and the left-hand end of the lever 102 rests upon the lever 117 in front of its connection to the plate 118 and by its vibration depresses said hammer-roll and causes it to strike a blow upon the upturned lip or channel-flap to complete the turning and setting of the same, the axis of said roll being at right angles to the length of the rib to be acted upon or to the line of feed of the work, a stop-screw 120, set in said lever 117 forward of its fulcrum, limiting its upward movement, as shown in Fig. 18.

The feed-arm 79 has adjustably secured thereon at its lower end the cutting-blade 121, the cutting edge of which is oblique to a horizontal plane and at a right angle to the line of feed of the work, the office of said cutter being to cut in the upper surface of the sole from its edge toward its center or at right angles to said edge a series of incisions, one at each downward movement of the feed-arm, which incisions are formed in advance of the cutting of the channel or splitting of the edge of the sole to form the channel-lip *e*, and said incisions are made to such a depth at the outer edge of the sole that the lip *e*, when formed by the action of the channel-cutting knife 41 will have its outer edge divided in a series of sections by said incisions, by virtue of which said lip is more easily turned into the position it occupies in Fig. 28, particularly in the shank portion of the sole. The cutting-blade 121 is secured to the feed-arm by means of a clamping-screw which passes through a slot in its shank and is screwed into said feed-arm, as shown in Figs. 8 and 9, so that it may be adjusted vertically on said feed-arm to regulate the depth of the incisions cut thereby in the sole, and said cutter is moved up and down with said feed-arm, to which it is firmly secured.

The several parts of the machine being in the positions shown in Figs. 1, 2, and 3, the operator first depresses the front end of the lever 14 to raise the tool-carrying bracket, then places the sole to be operated upon on the work-support, with its heel end toward the rear and its edge against the gage 60, and releases the lever 14, when the reaction of the spring 12 causes the pressure-rolls 44 and 50 to press the sole into close contact with the work-support. Now if the wheel 21 be revolved in the direction indicated by the arrow on Fig. 3 the first effect produced is a downward movement of the feed-arm till the feed-points 81 enter the sole through the action of the cam-path 66 upon the lever 67, and at the same time the hammer 104 is moved downward to strike a blow upon the sole. Then the action of the long throw *a* to *b* of the cam-path 78 of the disk 20 upon the lever 74 causes the lower end of said feed-arm to be moved toward the rear to feed the sole, during which time that portion of the path of the cylinder-cam 18 between *c* and *d*, Fig. 22, acting upon the lever 31 imparts a series of reciprocations to the slide 23 24, thereby causing the cutters 41 and 46 to make a corresponding series of reciprocations, each movement toward the front causing a section of two separate channels to be cut, and the action of the curved or plowshare surface above the cutter 41 causing a section of the lip formed by said cutter splitting the edge of the sole to be turned upward into a nearly perpendicular position, the hammer in the meantime striking several blows to complete the turning and compacting or setting said lip in its turned position, as shown in Fig. 28. The feed-arm is then raised and then moved to the front into the position at starting, at which time the shaft 17 has completed one half of a revolution, and these motions are repeated during the other half of the revolution of said shaft, and during each revolution of said shaft two complete cycles of operations take place, as the two halves of each cam are duplicates.

It will be seen that the movements of the channel-cutters are parallel to the edge of the sole, and the cutting action is against the feed movement of the sole, and that the pressure-rolls, which bear upon the sole in close proximity to the edges of said cutters, move with said cutters, and therefore always bear the same relations thereto. If a longer or shorter feed is desired, the fulcrum-pin 82 is moved, respectively, up or down in the slots 80 and 91 by means of the lever 89.

In Fig. 28 is shown a transverse section of a channeled sole, in which *e* is the lip, formed by the action of the cutter 41 in splitting the edge of the sole, and *f* is the channel cut by the cutter 45.

I claim—

1. In an insole-channeling machine the combination of a work-support; a vibratory feed-arm provided with a feed-point to engage the sole to feed the same; means for imparting to said feed-point a four-motion movement; a horizontally-movable slide; a vertically-yielding tool-stock carried by said slide; a cutter carried by said stock and having a cutting edge parallel to the work-support and at right angles to the line of direction of the feed; a pressure-surface also carried by said stock and arranged in close proximity to said cutter and parallel to said work-support; and means for imparting to said slide and the tools carried thereby a succession of series of rapid reciprocations with a standstill after each series.

2. In an insole-channeling machine the combination of a work-support; a horizontally-movable slide; a pair of vertically-yielding tool-stocks carried by said slide; a cutter carried by one of said stocks and arranged with its cutting edge parallel to the work-support and at right angles to the line of direction of the feed; a cutter carried by the other

of said stocks with its cutting edge inclined to the upper surface of said work-support and substantially at a right angle to the line of direction of the feed; a pressure-surface carried by each of said stocks and movable vertically therewith and arranged in front of, and in close proximity to the cutting edges of said cutters; means for imparting to said slide and the tools carried thereby a succession of series of rapid reciprocations in the direction of the line of feed with a standstill after each series; a feed-bar provided with a feed-point arranged to enter the sole and to be vibrated between the ends of said pressure-surfaces, and means for imparting to said feed-point a four-motion movement to feed the material.

3. In an insole-channeling machine the combination with a work-support, of a work-feeding mechanism comprising the following elements viz: the longitudinally-slotted feed-arm 79 provided with feed-point 81; a vertically-adjustable fulcrum about which said feed-arm may be vibrated the swiveling forked stud 64; the lever 65; the cam-path 66; the lever 67 operated by said path; the link 69; the cam-path 78; the lever 74 operated by said path; the link 73 pivoted at one end to the upper end of said lever 74; and ball-and-socket joints connecting the feed-arm, and the links 69 and 73 to said lever 65.

4. In an insole-channeling machine, the combination with a work-support and suitable pressure devices for holding the work to the work-support; of a feed-arm provided with feed-points to engage the sole; means for imparting to said feed-points a four-motion movement to feed the work; and means for automatically pressing said feed-points in a direction at right angles to the line of direction of the feed while said points are feeding the sole.

5. In an insole-channeling machine the combination with a work-support and pressure devices for holding the sole to the work-support, of an adjustable gage arranged to overhang said work-support; the feed-arm 79 provided with the longitudinal slot 80, and feed-points 81; the vertically-adjustable fulcrum-pin 82; the disk 96 provided with the flat-sided hub 97, to fit said slot 80, and on its outer face with the inclined or cam surfaces 101 and mounted loosely upon said pin 82; the disk 98 provided on its inner face with inclined or cam surfaces to match those on the disk 96, and secured in a non-revoluble position to the pin 82 and means for imparting to said feed-points a four-motion movement to feed the sole.

6. In an insole-channeling machine, the combination with a work-support, of the reciprocating slide 23, 24, the vertically-yielding tool-stock 32 carried by said slide; the cutter 41 carried by said stock, and arranged with its cutting edge parallel or nearly so to the surface of the work-support and at right angles to the line of direction of the feed; a pressure-surface adjustably secured to said stock and arranged in front of and in close proximity to the cutting edge of said cutter; the feed-arm 79 provided with the feed-points 81 to engage the sole; means for imparting a four-motion movement to said feed-points, said feed-points being located contiguous to the front of said pressure-surface; means for imparting to said slide 23, 24, a succession of series of rapid reciprocations, with a standstill after each series; a curved plowshare-like surface, contiguous to the upper surface of said cutter, for turning the lip, cut by said cutter, upward; a hammer for completing the turning of, and setting said lip, located in close proximity to said cutter; and means for imparting to said hammer a succession of rapid upward and downward strokes.

7. In an insole-channeling machine the combination of a work-support; a horizontally-reciprocating slide, a vertically-yielding tool-carrying stock carried by said slide; the cutter 41 carried thereby and provided with a curved plowshare-surface to turn the lip cut thereby; a pressure-surface arranged in front of and in close proximity to the edge of said cutter and adjustably secured to and movable with said stock; a hammer to act upon the channel-lip; the lever 102 for operating said hammer; the block 106 adjustably secured to said lever, and provided on its under surface with a series of steps or bearing-surfaces at different levels to receive the upward thrust for giving the blow of said hammer upon said channel-lip; the link 108 provided at its upper end with the slot 107 to receive said block and lever; the lever 110 connected at its movable end to said link; and the cam 112 for vibrating said lever.

8. An insole-channeling machine comprising the following means for setting the channel-lip, viz: a vibrating hammer arranged to strike a succession of rapid blows thereon in combination with a pivoted lever for operating the same; the block 106 adjustably secured to said lever and provided on its under side with a series of bearing-surfaces at different levels; the link 108 provided at its upper end with the slot 107, to receive said block and lever; the slotted arm 113, the forked end of which embraces said link above its slot, and is adjustably secured to the block 106; a cushion of leather 115 between the bottom of the fork of the arm 113 and the upper end of the slot 107; the spring 116 inserted in the lower end of said slot and bearing against the under side of the block 106; the lever 110 pivoted at its movable end to the lower end of said link 108; the bearing 109 for the upper end of said link; and the cam-path 112 to act upon and vibrate said lever 110.

9. In an insole-channeling machine the combination with a work-support mounted upon a fixed stand, of a vertically-movable bracket comprising the hub 7, the arm 8, plates 9 and 10, and the shank 11 fitted to and vertically movable in a bearing in an upright of the machine-frame; the slide 23, 24, fitted to and

movable horizontally in a bearing in the plate 10; the tool-stocks 32 and 33 fitted to and movable vertically in bearings in said slide; the cutter 41 carried by the lower end of the stock 32 with its cutting edge parallel to the upper surface of the work-support and at right angles to the line of direction of the feed; a pressure-surface supported by and movable with said stock 32; the block 45 secured to and adjustable transversely of the lower end of the stock 33, the obliquely-arranged cutter 46 carried by said block 45; a pressure-surface supported by and movable with said stock 33; the spring 12 connected at its upper end to said bracket and at its other end to the bed of the machine; and the lever 14 pivoted to the ears 16, and engaging the lower end of the shank 11 to raise it and the cutters and pressure-surfaces for the insertion and removal of the sole.

10. In an insole-channeling and lip-turning machine the combination with a work-support, of the lever 53 pivoted to a fixed part of the machine by a vertical pivot-pin; the gage 60 formed upon or secured to said lever and extending over the upper surface of the work-support; the bracket 54 arranged to support the movable end of said lever, and provided in its upper surface with a series of ratchet-teeth extending transversely thereof, and with two series of holes; the two pins 57 and 58 set in two of said holes to limit the extreme movement of said lever; and the pawl 59 secured in a fixed position on said lever in position to engage with said ratchet-teeth as set forth.

11. In an insole-channeling machine, the combination of a work-support; a vibratory feed-arm provided with a feed-point to engage the surface of the sole, to feed the same; means for imparting to said feed-point a four-motion movement; a horizontally-movable slide; a vertically-movable tool-stock carried by said slide; a cutter carried by said stock, and having a cutting edge inclined to the upper surface of the work-support, and approximately at a right angle to the line of direction of the feed; a pressure-surface also carried by, adjustable on, and vertically movable with said stock, and arranged in close proximity to said cutter, and parallel to the upper surface of said work-support; and means for imparting to said slide, and the tools carried thereby, a succession of rapid reciprocations, with a standstill after each series.

12. The combination in an insole-channeling machine of a channel-cutter constructed and arranged to split the edge of the sole; means for feeding the sole against said cutter; a vertically-reciprocating cutter constructed and arranged to cut an incision in the surface of the sole from its edge toward its center, in advance of the action of the channel-cutter upon the sole; and a work-support.

13. The combination in an insole-channeling and lip-turning machine, of mechanism for cutting a series of incisions in the outer portions of the surface of the sole, said incisions extending from the outer edge of said sole toward its center, or at right angles to the line of direction of the feed; a channel-cutting mechanism; a lip-turning means; a lip-setting mechanism, said several mechanisms being constructed arranged and operated to perform their several operations in the order in which they are herein named; and a work-support.

In testimony whereof I have signed my name to this specification, in the presence of two subscribing witnesses, on this 20th day of March, A. D. 1899.

ALBERT E. JOHNSON.

Witnesses:
N. C. LOMBARD,
C. HERBERT PORTER.