(12) INTERNATIONAL APPLICATION PUBLISHED UNDER THE PATENT COOPERATION TREATY (PCT)

(19) World Intellectual Property Organization
International Bureau

(43) International Publication Date
13 August 2015 (13.08.2015)

WIPO | PCT

(10) International Publication Number
WO 2015/118317 A1

(51) International Patent Classification:
B01J 19/00 (2006.01) *B01J 19/12* (2006.01)

(21) International Application Number:
PCT/GB2015/050290

(22) International Filing Date:
4 February 2015 (04.02.2015)

(25) Filing Language: English

(26) Publication Language: English

(30) Priority Data:
1401890.7 4 February 2014 (04.02.2014) GB
1410109.1 6 June 2014 (06.06.2014) GB

(71) Applicant: **VAPOURTEC LIMITED** [GB/GB]; 16 Park Farm Business Centre, Fornham St. Genevieve, Bury St Edmunds Suffolk IP28 6TS (GB).

(72) Inventor: **GUTHRIE, Duncan**; 16 Park Farm Business Centre, Fornham St. Genevieve, Bury St Edmunds Suffolk IP28 6TS (GB).

(74) Agents: **HODSDON, Stephen** et al.; Mewburn Ellis LLP, 33 Gutter Lane, London, Greater London EC2V 8AS (GB).

(81) Designated States *(unless otherwise indicated, for every kind of national protection available)*: AE, AG, AL, AM, AO, AT, AU, AZ, BA, BB, BG, BH, BN, BR, BW, BY, BZ, CA, CH, CL, CN, CO, CR, CU, CZ, DE, DK, DM, DO, DZ, EC, EE, EG, ES, FI, GB, GD, GE, GH, GM, GT, HN, HR, HU, ID, IL, IN, IR, IS, JP, KE, KG, KN, KP, KR, KZ, LA, LC, LK, LR, LS, LU, LY, MA, MD, ME, MG, MK, MN, MW, MX, MY, MZ, NA, NG, NI, NO, NZ, OM, PA, PE, PG, PH, PL, PT, QA, RO, RS, RU, RW, SA, SC, SD, SE, SG, SK, SL, SM, ST, SV, SY, TH, TJ, TM, TN, TR, TT, TZ, UA, UG, US, UZ, VC, VN, ZA, ZM, ZW.

(84) Designated States *(unless otherwise indicated, for every kind of regional protection available)*: ARIPO (BW, GH, GM, KE, LR, LS, MW, MZ, NA, RW, SD, SL, ST, SZ, TZ, UG, ZM, ZW), Eurasian (AM, AZ, BY, KG, KZ, RU, TJ, TM), European (AL, AT, BE, BG, CH, CY, CZ, DE, DK, EE, ES, FI, FR, GB, GR, HR, HU, IE, IS, IT, LT, LU, LV, MC, MK, MT, NL, NO, PL, PT, RO, RS, SE, SI, SK, SM, TR), OAPI (BF, BJ, CF, CG, CI, CM, GA, GN, GQ, GW, KM, ML, MR, NE, SN, TD, TG).

Published:

— *with international search report (Art. 21(3))*

— *with amended claims (Art. 19(1))*

(54) Title: PHOTOCHEMICAL REACTOR

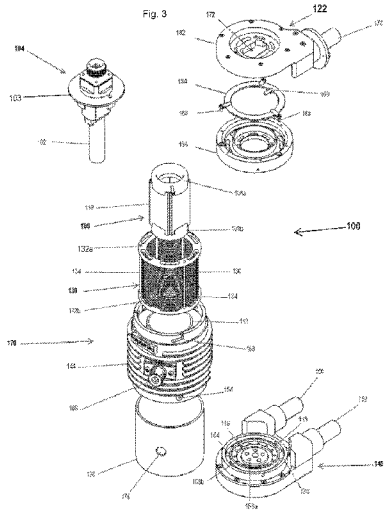

(57) **Abstract**: A device for carrying out a temperature-controlled photochemical reaction is provided, the device including: a lamp chamber capable of receiving a light source and having a first gas inlet and a first gas outlet for respectively feeding gas into and out of the lamp chamber; a reactor chamber having a second gas inlet and a second gas outlet for respectively feeding gas into and out of the reactor chamber, and a reactor unit, the reactor unit including a reactor in the form of a translucent tube; a translucent first separator separating the lamp chamber and the reactor chamber in an airtight manner; wherein the reactor chamber surrounds the lamp chamber. The device can provide accurate temperature control of photochemical flow reactions by having separate cooling systems for the lamp and reactor. Further aspects of the invention provide a kit including a device, a reactor and a lamp, and a method of carrying out a temperature-controlled photochemical flow reactions.

WO 2015/118317 A1

PHOTOCHEMICAL REACTOR

The present invention relates to a photochemical reactor. It is particularly, but not exclusively concerned with a photochemical reactor for use in flow chemistry in which the light source and the reactor chamber are isolated from each other and separately cooled.

Photochemistry, the use of light to effect chemical reactions, has a number of important applications both in nature, such as photosynthesis and vitamin D formation, and in industry. One such potential industrial application is the synthesis of the current most effective malaria therapy, artemisinin as described by F. Lévesque and P H Seeberger in *Agnew Chem. Int. Ed.* 2012 DOE: 10.1002/anie.201107446. Artemisinin is impractical to synthesize from scratch but using photochemical reactions, it can be synthesized from artemisinic acid, a by-product of the procedure used to extract artemisinin from sweet wormwood plants. The key stage is a reaction with a singlet oxygen molecule which can only be produced by a photochemical reaction.

In modern synthetic chemistry, photochemistry has fallen out of favour. This is because in batch use it has several problems. It is difficult to scale up a photochemical batch reaction, since the (typically UV) light can only cause reactions within a certain range and it can be difficult to ensure that all of the reactants are exposed to sufficient quantity of radiation to ensure complete reaction. This also results in less finely tuned control of the reactions.

It has recently started to become recognised that a flow chemistry approach to photochemical reactions may provide several advantages over the batch reactions discussed above. Flow photochemistry involves allowing the reactants constantly to move along a tube, or channel which is exposed to the light source. A known advantage of flow chemistry is that by controlling the flow rate of the reactants, a greater control of the reaction rate, volume and temperature at which the reaction occurs can be achieved. Furthermore, in flow chemistry, a narrow reactor tubing can be used which can mean that all of the reactant across a diameter of the tubing gets exposure to the light (due to the increased surface area to volume ratio of the reactor), and not just that within a small radius of the light, also resulting in a greater photonic efficiency.

Bachollet et al. in *Microflow photochemistry: UVC-induced [2 + 2]-photoadditions to furanone in a microcapillary reactor*, Beilstein J. Org. Chem. 2013, 9, 2015-2021 showed that using a flow chemistry approach can vastly increase the conversion rate and product quality of [2+2]-photoadditions to furanone.

In reactions where synthesis of unstable species is required in order to synthesize a second species, using flow chemistry can allow this second synthesis to occur quickly, and in a

controlled manner. In a batch reaction, the unstable species may decompose or react undesirably before it can be harvested for further reactions. Swift removal of the products once the reaction has occurred can also prevent unwanted decomposition or secondary reactions occurring.

The majority of photochemical reactions rely on light in the UV region, with wavelengths between 200 and 400nm. Some catalysed reactions can occur using light from the visible region of the electromagnetic spectrum.

The ideal light source for photochemical reactions is one which emits a broad spectrum of wavelengths between 200nm and 400nm, since the exact wavelength required to get the maximum output from the reaction is rarely known. However, in most lamps (e.g. medium-pressure (1-10 atm) and high-pressure (>10 atm) mercury vapour lamps) only 10-15% of the energy emitted is in this range, the vast majority being emitted as heat (i.e. infrared radiation). This results in not only the light source becoming very hot, but significant heat transfer to the surrounding area, which will typically include the reactor. Such heat transfer has several disadvantages in flow chemistry. Higher temperatures can often allow one or more unwanted side-reactions to occur, reducing the yield of the desired product. If these side-reactions are polymerisation reactions, resulting in solid products, the tubes in which the reactions are taking place can easily become clogged and need replacing.

LEDs can be used to generate a much "cooler" light, with typically no infra-red or visible emissions from a UV LED. However, LEDs normally only emit at a very specific wavelength, which is often not the wavelength required to drive the reaction desired. Even if an LED emitting at a suitable frequency for a particular reaction was available, its utility would be limited to that reaction. LEDs also generally emit much lower intensities of radiation (particularly compared to discharge lamps) and so cannot synthesise reactions on a sufficient scale or at a sufficient rate. As a result, LED light sources are not particularly useful in practical photochemistry.

As a result of the above considerations, in known flow photochemical reaction set ups, a trade-off is made when choosing the distance of the reaction vessel from the light source. Too near, and the temperature will be too high; too far, and the intensity of the UV radiation reaching the reaction vessel will be too low to cause sufficient reactions.

To improve this situation, cooling systems are employed to keep the temperature of the reaction vessel down while allowing it to sit near the light source.

Fig. 1 shows a typical batch setup in which a lamp 2 is placed in the centre of the water-cooling jacket 4 through which a continuous flow of water is passed and the reaction takes place in a reactor vessel 5 surrounding the water-cooling jacket.

A flow chemistry development of this type of reactor is shown in Fig. 2, which shows the same setup, except the reaction takes place in the coiled FEP tubing 6 outside the water cooling jacket 4. Often, with water-cooled reactors like those shown in Figs. 1 and 2, IR absorbers will also be added to the water in order to further reduce the temperature transmitted to the reactor vessel.

Another water-cooled system uses a block of quartz with microchannels etched into it as the reaction vessel. Channels of water can be run above and below these, in order to cool the reaction taking place within. The block is then irradiated from above and below. However, such devices are expensive to produce, and are particularly susceptible to clogging due to the especially narrow channels. Furthermore, typically only ~40% of the area of the quartz can be filled with microchannels and therefore a large block is required for practical purposes.

Although these solutions overcome some of the problems identified above, they are far from perfect. The cooling water will still conduct some of the heat from the lamp across to the reactants. It will also absorb a small amount of the UV light emitted from the lamp.

The setup proposed by Bachollet et al. in the above mentioned reference uses a ring of eight 4W UVC lamps surrounding a chamber reactor. An integrated fan is used to cool this reactor so that temperatures did not exceed 30°C. The cooling air was blown up the centre of the reaction vessel. However, as this was not a closed system, no accurate temperature control was provided. Moreover, the lamps used here are low power, low intensity (compared to a medium or high pressure discharge lamp) low pressure discharge lamps, commonly named fluorescent lamps.

An aim of the present invention is to provide a photochemical reactor in which the temperature of the reactor can be controlled independently of the cooling of the lamp. Preferably the photochemical reactor provides good thermal separation between the lamp and the reactor.

A further aim of the present invention is to provide a photochemical reactor which allows for accurate temperature control of the reactor, while maximizing the intensity of the UV radiation incident upon the reaction mixture.

At its broadest, a first aspect of the present invention provides a device for carrying out a photochemical reaction, which has separate portions for the light source and the reactor, thereby preferably providing different zones for temperature control.

A first aspect of the present invention preferably provides a device for carrying out a temperature-controlled photochemical reaction, the device including: a lamp chamber capable of receiving a light source and having a first gas inlet and a first gas outlet for respectively feeding gas into and out of the lamp chamber; a reactor chamber having a second gas inlet and a second gas outlet for respectively feeding gas into and out of the reactor chamber, and a reactor unit, the reactor unit including a reactor in the form of a translucent tube; a translucent first separator separating the lamp chamber and the reactor chamber in an airtight manner; wherein the reactor chamber surrounds the lamp chamber.

The separation of the reactor chamber from the lamp chamber means that separate cooling/temperature control processes can be implemented for each of these chambers. This can allow the temperature of the reactor chamber to be closely controlled to provide for the preferred reaction temperature, despite the close presence of the light source and the heat emitted from it. Preferably the temperature of the reactor chamber and the reactor can be controlled by controlling the gas flow or the temperature of gas flowing through the reactor chamber. At the same time a constant flow of cooling air can be passed through the lamp chamber to cool the light source and dissipate some of the heat emitted by the light source.

Preferably the gas flows through the lamp chamber and the reactor chamber do not mix at any point in the device. This ensures that separation of the cooling/temperature control processes is provided for.

In the present invention, the term translucent is to be interpreted as meaning that the item transmits (i.e. does not absorb) at least a portion of the ultraviolet or visible spectrum of radiation. Preferably the components indicated as being translucent are substantially or wholly transparent to a substantial portion of, or the whole of, the ultraviolet and/or visible spectrum.

Preferably said reactor unit is removable from the device. This allows the reactor unit to be interchanged, for example where it is desired to use a reactor of a different volume, or if the reactor becomes blocked and needs to be cleaned or replaced.

The lamp chamber may be further arranged to receive a removable filter assembly having a least one filter element.

Where provision is made for a filter assembly to be present, the first gas inlet may include a plurality of ports such that, when said removable filter assembly is present, gas which is fed into the lamp chamber is fed by said ports into regions on both sides of said filter element. This arrangement can ensure that the two sides of the filter elements are maintained at the same temperature and so there is no thermal stress in the filter elements.

The filter assembly preferably includes a plurality of planar filter elements, typically at least three, arranged in a cage structure. For many substances which are used to form filter elements, it is very difficult to create and / or obtain non-planar structures.

Preferably the device also includes a casing. The casing can perform some or all of the following functions.

Preferably the inner surface of the casing is substantially reflective to ultraviolet radiation. This means that a significant portion, preferably substantially all, of the ultraviolet radiation from the light source reaching the casing is reflected back towards the centre of the device. This ensures that the ultraviolet radiation emitted from the light source continues to be reflected internally in the device until it is absorbed by the reactants in the reactor and so substantially all of the ultraviolet radiation is available for the reaction.

In certain embodiments, the inner surface of the casing may have a coating which is substantially reflective to ultraviolet radiation and substantially absorptive of visible and infra-red radiation. Preferably the coating reflects >80% of the energy in the wavelength range 200-450 nm, more preferably >90%. Preferably the coating absorbs >80% of the energy in the wavelength range 500-2000 nm, more preferably >90%.

The casing may also act as a heat sink. The material of the casing may be chosen such that it absorbs all, or a substantial portion of, the infra-red radiation incident on the inner surface of the casing. This will result in most or all of the infra-red radiation emitted by the light source only passing through the reactor chamber (and therefore the reactor) once before it is absorbed by the casing and dissipated to the outside of the device.

In order to improve the performance of the casing as a heat sink, the casing may have one or more fins arranged around the outer surface which increase the surface area of the casing and therefore the rate of heat dissipation.

Preferably the device also includes: a translucent second separator which is arranged to form a pocket between said second separator and the casing, wherein the second separator is situated between the reactor chamber and the casing. The pocket acts as an insulating layer between

the casing and the reactor chamber and thereby significantly reduces or even prevents the heat of the casing (resulting from absorption of radiation from the light source) from being transmitted back to the reactor chamber. The pocket between the second separator and the casing is typically filled with air, and need not be completely airtight. Still-air is a poor conductor of heat from the casing and the second separator acts to reduce or eliminate convection of air from the pocket to the reactor chamber.

Preferably the first translucent separator and/or the second translucent separator are made of quartz glass. Quartz glass has a broad transmission spectrum in the UV range and so absorbs very little of the ultraviolet radiation from the light source, thereby allowing it to pass to the reactor chamber and the reactor (in the case of the first translucent separator) and to be reflected back into the reactor chamber by the casing (in the case of the second translucent separator).

Preferably the device also includes a temperature sensor arranged to measure the temperature of the reactor. The temperature sensor can be connected to a controller which controls the temperature and/or volume flow rate of gas flowing through the reactor chamber so as to keep the temperature of the reactor (and therefore of the reagents in it) at a carefully controlled temperature. This can assist in preventing unwanted alternative reactions or in increasing or maximising the yield of the reaction.

The device preferably also includes a shield arranged to block at least some of the radiation from the light source from reaching the temperature sensor. Preferably the shield is arranged to block infra red radiation. Preferably the shield is arranged to block radiation from reaching the temperature sensor directly from the lamp.

The device may also include a spectrometer arranged to measure the real-time spectral transmittance of one or more of the light source, the filter assembly, the reactor and reagents in the reactor, when those elements are present in the device. The inclusion of a spectrometer may allow the real-time photochemical reaction conditions in the reactor to be monitored and adjusted if desired.

The device may further include a light assembly housing said light source, wherein the device and the light assembly are arranged to interlock such that power can only be supplied to the light source if the light assembly is correctly positioned within the device. By providing an interlock mechanism, the light source can be prevented from illuminating except if the light assembly is correctly positioned in the device. This provides a safety feature allowing higher intensity light sources to be safely used as the device may ensure that the light source cannot

illuminate when it is outside of the device and so cannot cause harm to someone viewing the light source.

In a preferred embodiment the light assembly has a switch controlling the light source, wherein the switch is activated when the light assembly is correctly positioned within the device. This switch arrangement provides for the interlocking of the device and light assembly. The switch may be a contact switch, a reed switch or any other known switch. Preferably the switch is connected to a relay which forms part of the electrical circuit supplying power to the light source, and therefore does not need to handle the currents and/or voltages required to power the light source.

In preferred embodiments, the light assembly includes a high-pressure or medium-pressure mercury vapour lamp as said light source. Mercury vapour discharge lamps provide for high intensity broad spectrum emission in the ultra-violet spectrum and so provide a significant number of photons which can be used by photochemical reactions.

The light source is preferably removable from the device so that it can be replaced or exchanged for an alternative light source.

The device of this aspect may include some, all or none of the above optional and preferred features in any combination.

The device of this aspect is preferably used in a method according to the third aspect of the invention described below, but is not limited to such use.

At its broadest, the second aspect of the present invention provides a kit of parts which together make up a reactor which has separate portions for the light source and the reactor, thereby preferably providing different zones for temperature control.

The second aspect of the present invention preferably provides a kit of parts including: a device for carrying out a temperature-controlled photochemical reaction, said device including: a lamp chamber capable of receiving a light source and having a first gas inlet and a first gas outlet for respectively feeding gas into and out of the lamp chamber; a reactor chamber capable of receiving a reactor unit and having a second gas inlet and a second gas outlet for respectively feeding gas into and out of the reactor chamber; and a translucent first separator separating the lamp chamber and the reactor chamber in an airtight manner; wherein the reactor chamber surrounds the lamp chamber; a reactor unit having a reactor in the form of a translucent tube; and a light source.

The separation of the reactor chamber from the lamp chamber means that separate cooling/temperature control processes can be implemented for each of these chambers. This can allow the temperature of the reactor chamber to be closely controlled to provide for the preferred reaction temperature, despite the close presence of the light source and the heat emitted from it. Preferably the temperature of the reactor chamber and the reactor can be controlled by controlling the gas flow or the temperature of the gas flowing through the reactor chamber. At the same time a constant flow of cooling air can be passed through the lamp chamber to cool the light source and dissipate some of the heat emitted by the light source.

Preferably the gas flows through the lamp chamber and the reactor chamber do not mix at any point in the device. This ensures that separation of the cooling/temperature control processes is provided for.

In the present invention, the term translucent is to be interpreted as meaning that the item transmits (i.e. does not absorb) at least a portion of the ultraviolet or visible spectrum of radiation. Preferably the components indicated as being translucent are substantially or wholly transparent to a substantial portion of, or the whole of, the ultraviolet and/or visible spectrum.

In the kit of the present aspect, the reactor unit is provided separately from and is removable from the device. This allows the reactor unit to be interchanged, for example where it is desired to use a reactor of a different volume, or if the reactor becomes blocked and needs to be cleaned or replaced.

Preferably the kit further includes a removable filter assembly having a least one filter element.

Where provision is made for a filter assembly to be present, the first gas inlet may include a plurality of ports such that, when said removable filter assembly is present, gas which is fed into the lamp chamber is fed by said ports into regions on both sides of said filter element. This arrangement can ensure that the two sides of the filter elements are maintained at the same temperature and so there is no thermal stress in the filter elements.

The filter assembly preferably includes a plurality of planar filter elements, typically at least three, arranged in a cage structure. For many substances which are used to form filter elements, it is very difficult to create and / or obtain non-planar structures.

Preferably the device also includes a casing. The casing can perform some or all of the following functions.

Preferably the inner surface of the casing is substantially reflective to ultraviolet radiation. This means that a significant portion, preferably substantially all, of the ultraviolet radiation from the

light source reaching the casing is reflected back towards the centre of the device. This ensures that the ultraviolet radiation emitted from the light source continues to be reflected internally in the device until it is absorbed by the reactants in the reactor and so substantially all of the ultraviolet radiation is available for the reaction.

In certain embodiments, the inner surface of the casing may have a coating which is substantially reflective to ultraviolet radiation and substantially absorptive of visible and infra-red radiation. Preferably the coating reflects >80% of the energy in the wavelength range 200-450 nm, more preferably >90%. Preferably the coating absorbs >80% of the energy in the wavelength range 500-2000 nm, more preferably >90%.The casing may also act as a heat sink. The material of the casing may be chosen such that it absorbs all, or a substantial portion of, the infra-red radiation incident on the inner surface of the casing. This will result in most or all of the infra-red radiation emitted by the light source only passing through the reactor chamber (and therefore the reactor) once before it is absorbed by the casing and dissipated to the outside of the device.

In order to improve the performance of the casing as a heat sink, the casing may have one or more fins arranged around the outer surface which increase the surface area of the casing and therefore the rate of heat dissipation.

Preferably the device also includes: a translucent second separator which is arranged to form a pocket between said second separator and the casing, wherein the second separator is situated between the reactor chamber and the casing. The pocket acts as an insulating layer between the casing and the reactor chamber and thereby significantly reduces or even prevents the heat of the casing (resulting from absorption of radiation from the light source) from being transmitted back to the reactor chamber. The pocket between the second separator and the casing is typically filled with air, and need not be completely airtight. Still-air is a poor conductor of heat from the casing and the second separator acts to reduce or eliminate convection of air from the pocket to the reactor chamber.

Preferably the first translucent separator and/or the second translucent separator are made of quartz glass. Quartz glass has a broad transmission spectrum in the UV range and so absorbs very little of the ultraviolet radiation from the light source, thereby allowing it to pass to the reactor chamber and the reactor (in the case of the first translucent separator) and to be reflected back into the reactor chamber by the casing (in the case of the second translucent separator).

Preferably the kit also includes a temperature sensor arranged to measure the temperature of the reactor. The temperature sensor can be connected to a controller which controls the

temperature and/or volume of gas flowing through the reactor chamber so as to keep the temperature of the reactor (and therefore of the reagents in it) at a carefully controlled temperature. This can assist in preventing unwanted alternative reactions or in increasing or maximising the yield of the reaction.

The device preferably also includes a shield arranged to block at least some of the radiation from the light source from reaching the temperature sensor. Preferably the shield is arranged to block infra red radiation. Preferably the shield is arranged to block radiation from reaching the temperature sensor directly from the lamp.

The device may also include a spectrometer arranged to measure the real-time spectral transmittance of one or more of the light source, the filter assembly, the reactor and reagents in the reactor, when those elements are present in the device. The inclusion of a spectrometer may allow the real-time photochemical reaction conditions in the reactor to be monitored and adjusted if desired.

The kit may further include a light assembly housing said light source, wherein the device and the light assembly are arranged to interlock such that power can only be supplied to the light source if the light assembly is correctly positioned within the device. By providing an interlock mechanism, the light source can be prevented from illuminating except if the light assembly is correctly positioned in the device. This provides a safety feature allowing higher intensity light sources to be safely used as the device may ensure that the light source cannot illuminate when it is outside of the device and so cannot cause harm to someone viewing the light source.

In a preferred embodiment the light assembly has a switch controlling the light source, wherein the switch is activated when the light assembly is correctly positioned within the device. This switch arrangement provides for the interlocking of the device and light assembly. The switch may be a contact switch, a reed switch or any other known switch. Preferably the switch is connected to a relay which forms part of the electrical circuit supplying power to the light source, and therefore does not need to handle the currents and/or voltages required to power the light source.

In preferred embodiments, the light assembly includes a high-pressure or medium-pressure mercury vapour lamp as said light source. Mercury vapour discharge lamps provide for high intensity broad spectrum emission in the ultra-violet spectrum and so provide a significant number of photons which can be used by photochemical reactions.

The light source is preferably removable from the device so that it can be replaced or exchanged for an alternative light source.

The kit of this aspect may include some, all or none of the above optional and preferred features in any combination.

The kit of this aspect is preferably used in a method according to the third aspect of the invention described below, but is not limited to such use.

At its broadest, a third aspect of the present invention provides a method of carrying out a temperature-controlled photochemical flow reaction in which the cooling of the light source and the control of the reactor temperature are independent.

A third aspect of the present invention preferably provides a method of carrying out a temperature-controlled photochemical flow reaction, the method including the steps of: passing one or more reactants for said photochemical reaction through a translucent tube reactor in a reactor chamber, arranged to lie radially outside a light source in a lamp chamber; illuminating said reactor with a light source arranged in a lamp chamber which is separated from said reactor chamber in an airtight manner by a translucent separator; cooling said lamp chamber by passing gas through the lamp chamber; monitoring the temperature of the reactor using a temperature sensor; and controlling the temperature of the reactor by passing gas through the reactor chamber and adjusting the temperature or flow rate of said gas.

The separation of the reactor chamber from the lamp chamber means that separate cooling/temperature control processes can be implemented for each of these chambers. This can allow the temperature of the reactor chamber to be closely controlled to provide for the preferred reaction temperature, despite the close presence of the light source and the heat emitted from it. Preferably the temperature of the reactor chamber and the reactor can be controlled by controlling the air flow through the reactor chamber. At the same time a constant flow of cooling air can be passed through the lamp chamber to cool the light source and dissipate some of the heat emitted by the light source.

The method may further include the step of filtering the output of the light source.

The method of this aspect preferably uses the device of the above first aspect or the assembled kit of the above second aspect, including some all or none of the optional or preferred features of those aspects. However, it need not do so and can use alternative devices or reactors.

BRIEF DESCRIPTION OF THE FIGURES

Embodiments of the present invention will now be described with reference to the accompanying drawings, in which:

Fig. 1 is a schematic diagram of a known batch photochemical reactor and has already been described;

Fig. 2 is a schematic diagram of a known flow photochemical reactor and has already been described;

Fig. 3 is an exploded view of a photochemical reactor according to an embodiment of the present invention; and

Fig. 4 is a sectional view of the photochemical reactor shown in Fig. 4.

DETAILED DESCRIPTION

Fig. 3 is an exploded view of a photochemical reactor 100 according to an embodiment of the present invention. Fig. 4 shows a view of the photochemical reactor 100 in a section taken through the centre of the reactor 100.

The photochemical reactor 100 is made up of a number of generally concentrically arranged components which are shown in exploded form in Fig. 3. These components include: a lamp assembly 104, a lid section 122, a main body 170 and a baseplate 140. The main body 170 includes, from the centre outwards, the following components: a filter assembly 106, a first separator 112, a reactor unit 130, a second separator 126 and a casing 144.

When assembled (as shown in Fig. 4), the main body 170 is sandwiched between the baseplate 140 and lid section 122 and these components secured to each other, for example, by way of a screw fitting or locking mechanism. An example of such a locking mechanism is shown as slots 168 arranged around the top of the casing 144 which engage with pins (not shown) in the bottom of the lid section 122. The lamp assembly 104 can then be introduced into the reactor 100 through a central hole 172 in the lid section 122.

In the present embodiment, the photochemical reactor 100 has a lamp 102 for illuminating the reactants and causing the reaction to proceed. Specifically, the lamp 102 is a mercury vapour lamp. Mercury vapour lamps provide for broad spectrum light across the UV range (albeit with specific peak frequencies) and high intensities of radiation. However, the skilled person will appreciate that other light sources such as LEDs or fluorescent lamps can also be used.

The lamp 102 may be dimmable so that the intensity of the light emitted can be controlled, with a corresponding effect on the reaction rate.

The lamp assembly 104 of the present invention includes the lamp 102, a connector 101 for connecting the lamp to a ballast or other power supply (not shown) and a fitting 103. The fitting 103 has locking components which interlock with the lid section 122 and can be used to prevent illumination of the lamp 102 when the lamp is outside the reactor 100. This interlocking arrangement provides a safety arrangement as the intensity of a mercury vapour lamp can be hazardous to the human eye if viewed directly.

The interlocking is arranged such that power will only be supplied to the lamp 102 if the following conditions are met: a) the lamp fitting 103 is in-place within the lid section 122; and b) the lid section 122 is correctly located onto the casing 144. The correct condition is detected using a magnetic reed switch (not shown). The reed switch is embedded in the lamp assembly 104 and wired in series with a relay that switches mains power to the lamp power supply. The lid section 122 is assembled from three parts, an upper housing 182, a lower housing 186 and a floating plate 184 having three protruding pins 188. The floating plate 184 is spring loaded so that the three pins 188 protrude into a recess in the underside of the lower housing 186 into which the casing 144 locates.

The casing 144 is locked into the lid using a 10 degree rotation "bayonet-type" engagement in which pins (not shown) on the lower housing 186 of the lid section 122 engage with and lock into slots 168 in the casing 144. When the lid section 122 is fully engaged onto the casing 144, the three pins 188 attached to the floating plate 184 cause the floating plate to be lifted against the spring force. A magnet mounted on the floating plate 184 is thereby lifted into a position sufficiently close to the reed switch to actuate the switch. If either the lamp assembly 104 is not in-place or the lid section 122 is not fully engaged onto the casing 144 then power cannot be supplied to the lamp.

The lamp 102 may be replaced by another light source by removing the entire lamp assembly 104.

As can be seen in Fig. 4, when the reactor 100 is assembled, the first separator 112 divides the reactor main body 170 into a lamp chamber 114, in which the lamp 102 and filter assembly 106 are positioned and a reactor chamber 128 in which the reactor unit 130 is positioned. The first separator 112 is a hollow cylinder of quartz glass which has broad spectrum transmission characteristics and so does not significantly reduce the amount of radiation from the lamp 102 reaching the reactor unit 130.

The baseplate 140 has an annular rim 119 against which the base of the first separator 112 sits when the reactor is assembled. A circular seal 120 is provided in the underside of the lid section 122 and abuts the top surface of the first separator 112 when the reactor is assembled

thereby forming a substantially or completely airtight seal between the lid section 122 and the separator, and consequently between the lamp chamber 114 and the reactor chamber 128.

The reactor chamber 128 surrounds the lamp chamber 114. When the reactor 100 is assembled, the reactor chamber 128 contains the reactor unit 130, which is disposed concentrically around the first separator 112. The reactor unit 130 does not make any physical contact with the outer surface of the first quartz-glass separator, however, so that the temperature of the reactor unit 130 is not affected by the temperature of the separator 112.

The reactor unit 130 consists of two annular frames 132a, 132b, a plurality of quartz glass supporting rods 134 extending between these frames, and a length of transparent or translucent FEP (fluorinated ethylene propylene) tubing 136 which is coiled into a helix supported by the quartz rods 134. The tubing 136 is connected to an input port (not shown) which allow the introduction of reagents into the reactor unit 130. The reagents flow through the tubing 136 and are exposed to radiation (in particular, for most reactions, ultra-violet light) from the lamp which drives or catalyses a desired reaction in the tubing. The reacted products then pass out of the tubing 136 through an output port (not shown),

The diameter of the tubing 136 can be chosen to be sufficiently small to ensure that any ultraviolet radiation incident upon the tubing is able to effect reactions at all points across the diameter, and not just near the inner edge. In the present embodiment, the total volume of the tubing in the reactor is 10ml, but 2ml, 5ml and 20ml reactors could also be used without difficulty.

The bottom circular frame 132b of the reactor unit 130 fits into an annular slot 138 in the baseplate 140. As with the lamp assembly 104, the reactor unit 130 can be easily removed and replaced with another reactor unit, e.g. if a different volume was required, or if the reactor unit were to become clogged by precipitate.

The outer perimeter of the reactor chamber 128 is formed by a second separator 126. As with the first separator 112, this separator is a hollow cylinder of quartz glass which has broad spectrum transmission characteristics and so does not significantly reduce the amount of radiation from the lamp passing through it. The second separator forms a pocket 146 between itself and an inner surface of the casing 144 of the reactor 100.

The casing 144 is made from metal, such as aluminium, and therefore absorbs a portion (preferably a substantial portion) of any infra-red radiation emitted from the lamp 102 and prevents it from being reflected back into the centre of the reactor 100. The absorption of this radiation will cause the casing 144 to heat up and act as a heat sink for the reactor 100. The

outer surface of the casing 144 is provided with a plurality of fins 148. These fins increase the surface area of the casing 144, allowing it to dissipate the absorbed heat into the atmosphere at a small temperature difference.

The inner surface of the casing is shiny in order to reflect a substantial portion of the useful radiation (typically the ultra-violet and visible light) back into the reactor, thereby causing it to pass through the reactor unit 130 again (and indeed may do so several times until it is absorbed).

The inner surface of the casing may have a coating (not shown) which selective reflects/absorbs radiation in particular wavelength ranges. In one embodiment the inner surface of the casing is coated using a dichoric aluminium sheet of approximately 0.3 mm thickness that is bonded to an aluminium casing 144. One such dichoric coated aluminium sheet is supplied by Deposition Sciences Inc. of Santa Rosa, California and is produced by reactive metal oxide sputtering for enhanced optical performance and durability.

The pocket 146 provides an insulating layer of gas between the casing 144 and the second separator 126, thereby insulating the reactor chamber 128 and, as a result, the tubing 136 and the reactants inside it from the heat of the casing 144, which acts as a heat sink.

The second separator 126 does not necessarily separate the reactor chamber 128 from the pocket 146 in an airtight manner, but the second separator 126 can be made to fit snugly within the casing 144, such that there is very little airflow between the pocket 146 and the reactor chamber 128.

The filter assembly 106 is made up of two annular frames 108a, 108b, into which four flat filters 110 are fixed. Generally it is much easier to machine flat filters than curved filters, and the inventors of the present application have found that a configuration of four flat filters as shown achieves approximately 95% of the filtering effect of a cylindrical filter. Since filters are rarely perfect in their transmission (or absorption) spectrum, this efficiency is acceptable for the purposes of almost all reactions.

The filter assembly 106 is removable from the reactor main body 170 and interchangeable with other filter assemblies having different filters. Indeed the filter assembly 106 need not be present at all where the unfiltered spectrum of the lamp is acceptable for the reaction being conducted.

The baseplate 140 has an annular slot 118 in which the lower circular frame 108b of the filter assembly 106 can rest. The filter assembly 106 is positioned inside the lamp chamber so that

any heat retained by the filters 110 (e.g. from the absorption of infra-red radiation) can be cooled along with the lamp and does not affect the temperature of the reactor chamber.

The photochemical reactor 100 has three gas inlets which feed into the lamp chamber 114 and the reactor chamber 128: a first gas inlet 150, a second gas inlet 152, and a third gas inlet 154.

The first gas inlet 150 can be connected to an external source of gas (not shown). Gas which enters the photochemical reactor 100 via this first gas inlet 150 enters a cylindrical cavity 156 situated in the centre of the baseplate 140 beneath the lamp chamber 114. Baseplate 140 has a plurality of ports 158a, 158b through which gas from cylindrical cavity 156 can flow into the lamp chamber 114.

When the filter assembly 106 is in place, the lamp chamber 114 is divided into two sub-regions, a central cylindrical portion 172 inside the filter assembly 106 which houses the lamp assembly 104 and an annular portion 174 outside the filter assembly 106. The ports 158a, 158b are arranged in two rings; the inner ring of ports 158a allow cooling gas to flow from the cylindrical cavity 156 to the central cylindrical portion 172 of the lamp chamber 114 inside the filter assembly 106. The outer ring of ports 158b allow gas to flow from the cylindrical cavity 156 to the annular portion 174 of the lamp chamber 114 outside the filter assembly 106. This allows both sides of the flat filters 110 to be cooled at the same time thus keeping them at the same temperature and avoiding thermal stress in the filters. Gas which leaves the lamp chamber 114 does so through the first gas outlet, which is then released into the atmosphere via an exhaust outlet in the lid section 122.

The second gas inlet 152 can be connected to a second external source of gas (not shown). Gas which enters the photochemical reactor 100 via this second gas inlet 152 enters an annular cavity 162 in the baseplate 140 beneath the reactor chamber 128. Baseplate 140 has a plurality of ports 164 through which gas from the annular cavity 162 can flow into the reactor chamber 128. Gas from the reactor chamber 128 exits the reactor chamber 128 via the second gas outlet 178.

The temperature of the gas, or the volume of the gas, which enters the reactor chamber 128, and heats or cools the reactor unit 130 can be carefully controlled in order to provide the correct reaction conditions for the reaction taking place within the tubing 136. A temperature sensor (not shown) is positioned in contact with the outer surface of the tubing 136 to provide an accurate temperature reading of the tubing (and therefore the reagents/reaction products inside it). The temperature sensor (and it connections) passes through a sealed aperture 166 in the casing 144, through a hole 176 in the second separator 126 and into the reactor chamber 128.

The readings from the temperature sensor are fed back to a controller which is arranged to control the temperature and/or volume of gas flow through the reactor chamber 128 and thereby accurately maintain the temperature of the reactants within a desired range or at a desired temperature.

As the temperature sensor may also be exposed to radiation directly received from the lamp 102. This may lead to inaccurate temperature measurements as such radiation may cause increased temperature to be sensed by the sensor, or the radiation may cause the sensor to "white-out" and provide temperature measurements which are off the scale expected.

To address this, the reactor 100 includes a shield 180 which blocks direct radiation from the lamp 102 from reaching the temperature sensor. The shield 180 is provided as a small metallic dot (in the present embodiment, the dot is circular, but other shapes could be used) on the internal surface of the first separator 112. As the contact tip of the temperature sensor is very small in cross-section in relation to the reactor 100 as a whole, the shield 180 can be correspondingly small, such that it has very little effect on the total radiation reaching the reactor unit 130 from the lamp 102.

In an alternative embodiment, which is not shown in the Figures, the shield 180 could be a small metallic element which is supported in the desired position inside the lamp chamber 114 on a stem mounted on the baseplate.

A further aperture or port (not shown) may be provided to allow for a spectrometer connected to a fibre optic cable to be inserted into the reactor chamber 128 in order to measure and analyse the spectral transmittance (or absorption) by any one of the lamp 102, the filters 110, the reactor tubing 136 and any reagents in the reactor tubing. The provision of a spectrometer which can measure the spectral transmittance in real time can allow for an improved understanding of the photochemical reaction conditions in the reactor and, if necessary, adjustments to those conditions. A suitable spectrometer is manufacturer by BWTEK Inc. and is a CCD spectrometer sold as the Exempler™.

If the gas passing through the reactor chamber 128 is being used to heat the chamber and the reactor unit 130, it is preferably recycled through a heating system so that the residual heat in the exhaust gas is not wasted.

Due to the configuration of the reactor 100 with the first separator 112 forming an airtight division between the lamp chamber 114 and the reactor chamber 128, two separate cooling circuits are created which are fed by, respectively, the first and second gas inlets 150, 152. Accordingly, the temperature of the reactor chamber (and therefore of the tubing 136 in which

the reaction is taking place) can be separately controlled from the temperature of the lamp chamber.

Furthermore, due to the separation of the lamp chamber 114 and the reactor chamber 128, very little heat is conducted from the lamp 102 to the reactor chamber 128, and only radiant heat affects the temperature of the reactor chamber. Most of the radiant heat emitted by the lamp 102 can be absorbed by either a suitable filter 106 or alternatively absorbed by the casing 144 and then dissipated to the exterior. The air pocket 146 and the second separator 126 insulate the casing 144 from the reactor chamber.

The photochemical reactor 100 is preferably adapted for use with a flow chemistry system, such as the E-Series or R-Series systems provided by the applicant, and the gas inlets 150, 152 and the second gas outlet 178 are preferably adapted to engage with the ports on that system.

For many reactions, the third gas inlet 154 is not used. However, if it is desired to carry out a reaction which requires a temperature lower than ambient, the third gas inlet 154 can be connected to a chilled gas supply (not shown). In this case, the third gas inlet 154 is connected instead of the second gas inlet 152 (and a valve may be used to close off the second gas inlet). Gas entering through the third gas inlet 154 enters the annular cavity 162 and then the reactor chamber 128 via the ports 164.

The inventors have found that a reactor according to the embodiment described is approximately as efficient (in terms of grams of reaction product per 100W of power input) as prior art reactors such as those described above having reactor volumes up to 20 times greater. Accordingly, a reactor according to the embodiment described can be made significantly more compact than the known reactors, and also results in less wastage of unreacted reactants and start-up/run-off volumes to initiate and clean the reactor.

While the invention has been described in conjunction with the exemplary embodiments described above, many equivalent modifications and variations will be apparent to those skilled in the art when given this disclosure. Accordingly, the exemplary embodiments of the invention set forth above are considered to be illustrative and not limiting. Various changes to the described embodiments may be made without departing from the spirit and scope of the invention.

All references referred to above are hereby incorporated by reference.

CLAIMS

1. A device for carrying out a temperature-controlled photochemical reaction, said device including:

a lamp chamber capable of receiving a light source and having a first gas inlet and a first gas outlet for respectively feeding gas into and out of the lamp chamber;

a reactor chamber having a second gas inlet and a second gas outlet for respectively feeding gas into and out of the reactor chamber, and a reactor unit, the reactor unit including a reactor in the form of a translucent tube;

a translucent first separator separating the lamp chamber and the reactor chamber in an airtight manner;

wherein the reactor chamber surrounds the lamp chamber.

2. A device according to claim 1 wherein the gas flows through the lamp chamber and the reactor chamber do not mix at any point in the device.

3. A device according to claim 1 or claim 2 wherein said reactor unit is removable.

4. A device according to any one of the previous claims, wherein:

the lamp chamber is arranged to receive a removable filter assembly having a least one filter element, and

the first gas inlet includes a plurality of ports such that, when said removable filter assembly is present, gas which is fed into the lamp chamber is fed by said ports into regions on both sides of said filter element.

5. A device according to claim 4 wherein the removable filter assembly includes at least three planar filter elements disposed in a cage such that the cage is arranged to surround the light source.

6. A device according to any one of the previous claims, wherein the device also includes a casing.

7. A device according to claim 6, wherein the inner surface of the casing is substantially reflective to ultraviolet radiation.

8. A device according to claim 7 wherein the inner surface of the casing has a coating which is substantially reflective to ultraviolet radiation and substantially absorptive of visible and infra-red radiation.

9. A device according to any one of claims 6 to 8, wherein the casing acts as a heat sink.

10. A device according to any one of claims 6 to 9, wherein the device also includes:

a translucent second separator which is arranged to form a pocket between said second separator and the casing,

wherein the second separator is situated between the reactor chamber and the casing.

11. A device according to any one of the previous claims, wherein the or at least one translucent separator is made of quartz glass.

12. A device according to any one of the previous claims, wherein the device also includes a temperature sensor arranged to measure the temperature of the reactor.

13. A device according to claim 12 wherein the device also includes a shield arranged to block at least some of the radiation from the light source from reaching the temperature sensor.

14. A device according to any one of the previous claims, wherein the device also includes a spectrometer arranged to measure the real-time spectral transmittance of one or more of the light source, the filter assembly, the reactor and reagents in the reactor, when those elements are present in the device.

15. A device according to any one of the previous claims further including a light assembly housing said light source, wherein the device and the light assembly are arranged to interlock such that power can only be supplied to the light source if the light assembly is correctly positioned within the device.

16. A device according to claim 15 wherein the light assembly has a switch controlling the light source, wherein the switch is activated when the light assembly is correctly positioned within the device.

17. A device according to claim 15 or claim 16 wherein the light assembly includes a high-pressure or medium-pressure mercury vapour lamp as said light source.

18. A kit of parts including:

a device for carrying out a temperature-controlled photochemical reaction, said device including:

a lamp chamber capable of receiving a light source and having a first gas inlet and a first gas outlet for respectively feeding gas into and out of the lamp chamber;

a reactor chamber capable of receiving a reactor unit and having a second gas inlet and a second gas outlet for respectively feeding gas into and out of the reactor chamber;

and

a translucent first separator separating the lamp chamber and the reactor chamber in an airtight manner;

wherein the reactor chamber surrounds the lamp chamber,

a reactor unit having a reactor in the form of a translucent tube; and

a light source.

19. A kit according to claim 18 wherein the gas flows through the lamp chamber and the reactor chamber do not mix at any point in the device.

20. A kit according to claim 18 or claim 19, wherein:

the lamp chamber is arranged to receive a removable filter assembly having a least one filter element, and

the first gas inlet includes a plurality of ports such that, when said removable filter assembly is present, gas which is fed into the lamp chamber is fed by said ports into regions on both sides of said filter element.

21. A kit according to claim 20 further including the removable filter assembly, the removable filter assembly including at least three planar filter elements disposed in a cage such that the cage is arranged to surround the light source.

22. A kit according to any one of claims 18 to 21, wherein the device also includes a casing.

23. A kit according to claim 22, wherein the inner surface of the casing is substantially reflective to ultraviolet radiation.

24. A kit according to claim 23 wherein the inner surface of the casing has a coating which is substantially reflective to ultraviolet radiation and substantially absorptive of visible and infra-red radiation.

25. A kit according to any one of claims 22 to 24, wherein the casing acts as a heat sink.

26. A kit according to any one of claims 22 to 24, wherein the device also includes:

a translucent second separator which is arranged to form a pocket between said second separator and the casing,

wherein the second separator is situated between the reactor chamber and the casing.

27. A kit according to any one of claims 18 to 26, wherein the or at least one translucent separator is made of quartz glass.

28. A kit according to any one of the claims 18 to 27, further including a temperature sensor arranged to measure the temperature of the reactor.

29. A kit according to claim 28 wherein the device also includes a shield arranged to block at least some of the radiation from the light source from reaching the temperature sensor when the light source and temperature sensor are assembled with the device.

30. A kit according to any one of claims 18 to 29, further including a spectrometer arranged to measure the real-time spectral transmittance of one or more of the light source, the filter assembly, the reactor and reagents in the reactor, when those elements are assembled in the device.

31. A kit according to any one of claims 18 to 30 further including a light assembly housing said light source, wherein the device includes and the light assembly are arranged to interlock such that power can only be supplied to the light source if the light assembly is correctly positioned within the device.

32. A kit according to claim 31 wherein the light assembly has a switch controlling the light source, wherein the switch is activated when the light assembly is correctly positioned within the device.

33. A kit according to claim 31 or claim 32 wherein the light assembly includes a high-pressure or medium-pressure mercury vapour lamp as said light source.

34. A method of carrying out a temperature-controlled photochemical flow reaction, the method including the steps of:

passing one or more reactants for said photochemical reaction through a translucent tube reactor in a reactor chamber, arranged to lie radially outside a light source in a lamp chamber;

illuminating said reactor with a light source arranged in a lamp chamber which is separated from said reactor chamber in an airtight manner by a translucent separator;

cooling said lamp chamber by passing gas through the lamp chamber;

monitoring the temperature of the reactor using a temperature sensor; and

controlling the temperature of the reactor by passing gas through the reactor chamber and adjusting the temperature or flow rate of said gas.

35. A method according to claim 34, further including the step of filtering the light from said light source.

AMENDED CLAIMS
received by the International Bureau on 25 June 2015 (25.06.2015)

CLAIMS

1. A device for carrying out a temperature-controlled photochemical reaction, said device including:

a lamp chamber capable of receiving a light source and having a first gas inlet and a first gas outlet for respectively feeding gas into and out of the lamp chamber;

a reactor chamber having a second gas inlet and a second gas outlet for respectively feeding gas into and out of the reactor chamber, and a reactor unit, the reactor unit including a reactor in the form of a translucent tube;

a translucent first separator separating the lamp chamber and the reactor chamber in an airtight manner;

wherein the reactor chamber surrounds the lamp chamber.

2. A device according to claim 1 wherein the gas flows through the lamp chamber and the reactor chamber do not mix at any point in the device.

3. A device according to claim 1 or claim 2 wherein said reactor unit is removable.

4. A device according to any one of the previous claims, wherein:

the lamp chamber is arranged to receive a removable filter assembly having a least one filter element, and

the first gas inlet includes a plurality of ports such that, when said removable filter assembly is present, gas which is fed into the lamp chamber is fed by said ports into regions on both sides of said filter element.

5. A device according to claim 4 wherein the removable filter assembly includes at least three planar filter elements disposed in a cage such that the cage is arranged to surround the light source.

6. A device according to any one of the previous claims, wherein the device also includes a casing.

7. A device according to claim 6, wherein the inner surface of the casing is substantially reflective to ultraviolet radiation.

8. A device according to claim 7 wherein the inner surface of the casing has a coating which is substantially reflective to ultraviolet radiation and substantially absorptive of visible and infra-red radiation.

9. A device according to any one of claims 6 to 8, wherein the casing acts as a heat sink.

10. A device according to any one of claims 6 to 9, wherein the device also includes:

a translucent second separator which is arranged to form a pocket between said second separator and the casing,

wherein the second separator is situated between the reactor chamber and the casing.

11. A device according to any one of the previous claims, wherein the or at least one translucent separator is made of quartz glass.

12. A device according to any one of the previous claims, wherein the device also includes a temperature sensor arranged to measure the temperature of the reactor.

13. A device according to claim 12 wherein the device also includes a shield arranged to block at least some of the radiation from the light source from reaching the temperature sensor.

14. A device according to any one of the previous claims, wherein the device also includes a spectrometer arranged to measure the real-time spectral transmittance of one or more of the light source, the filter assembly, the reactor and reagents in the reactor, when those elements are present in the device.

15. A device according to any one of the previous claims further including a light assembly housing said light source, wherein the device and the light assembly are arranged to interlock such that power can only be supplied to the light source if the light assembly is correctly positioned within the device.

16. A device according to claim 15 wherein the light assembly has a switch controlling the light source, wherein the switch is activated when the light assembly is correctly positioned within the device.

17. A device according to claim 15 or claim 16 wherein the light assembly includes a high-pressure or medium-pressure mercury vapour lamp as said light source.

18. A kit of parts including:

a device for carrying out a temperature-controlled photochemical reaction, said device including:

a lamp chamber capable of receiving a light source and having a first gas inlet and a first gas outlet for respectively feeding gas into and out of the lamp chamber;

a reactor chamber capable of receiving a reactor unit and having a second gas inlet and a second gas outlet for respectively feeding gas into and out of the reactor chamber;

and

a translucent first separator separating the lamp chamber and the reactor chamber in an airtight manner;

wherein the reactor chamber surrounds the lamp chamber,

a reactor unit having a reactor in the form of a translucent tube; and

a light source.

19. A kit according to claim 18 wherein the gas flows through the lamp chamber and the reactor chamber do not mix at any point in the device.

20. A kit according to claim 18 or claim 19, wherein:

the lamp chamber is arranged to receive a removable filter assembly having a least one filter element, and

the first gas inlet includes a plurality of ports such that, when said removable filter assembly is present, gas which is fed into the lamp chamber is fed by said ports into regions on both sides of said filter element.

21. A kit according to claim 20 further including the removable filter assembly, the removable filter assembly including at least three planar filter elements disposed in a cage such that the cage is arranged to surround the light source.

22. A kit according to any one of claims 18 to 21, wherein the device also includes a casing.

23. A kit according to claim 22, wherein the inner surface of the casing is substantially reflective to ultraviolet radiation.

24. A kit according to claim 23 wherein the inner surface of the casing has a coating which is substantially reflective to ultraviolet radiation and substantially absorptive of visible and infra-red radiation.

25. A kit according to any one of claims 22 to 24, wherein the casing acts as a heat sink.

26. A kit according to any one of claims 22 to 24, wherein the device also includes:

a translucent second separator which is arranged to form a pocket between said second separator and the casing,

wherein the second separator is situated between the reactor chamber and the casing.

27. A kit according to any one of claims 18 to 26, wherein the or at least one translucent separator is made of quartz glass.

28. A kit according to any one of the claims 18 to 27, further including a temperature sensor arranged to measure the temperature of the reactor.

29. A kit according to claim 28 wherein the device also includes a shield arranged to block at least some of the radiation from the light source from reaching the temperature sensor when the light source and temperature sensor are assembled with the device.

30. A kit according to any one of claims 18 to 29, further including a spectrometer arranged to measure the real-time spectral transmittance of one or more of the light source, the filter assembly, the reactor and reagents in the reactor, when those elements are assembled in the device.

31. A kit according to any one of claims 18 to 30 further including a light assembly housing said light source, wherein the device includes and the light assembly are arranged to interlock such that power can only be supplied to the light source if the light assembly is correctly positioned within the device.

32. A kit according to claim 31 wherein the light assembly has a switch controlling the light source, wherein the switch is activated when the light assembly is correctly positioned within the device.

33. A kit according to claim 31 or claim 32 wherein the light assembly includes a high-pressure or medium-pressure mercury vapour lamp as said light source.

34. A method of carrying out a temperature-controlled photochemical flow reaction, the method including the steps of:

passing one or more reactants for said photochemical reaction through a translucent tube reactor in a reactor chamber, arranged to lie radially outside a light source in a lamp chamber;

illuminating said reactor with a light source arranged in a lamp chamber which is separated from said reactor chamber in an airtight manner by a translucent separator;

cooling said lamp chamber by passing gas through the lamp chamber;

monitoring the temperature of the reactor using a temperature sensor; and

controlling the temperature of the reactor by passing gas through the reactor chamber and adjusting the temperature or flow rate of said gas.

35. A method according to claim 34, further including the step of filtering the light from said light source.

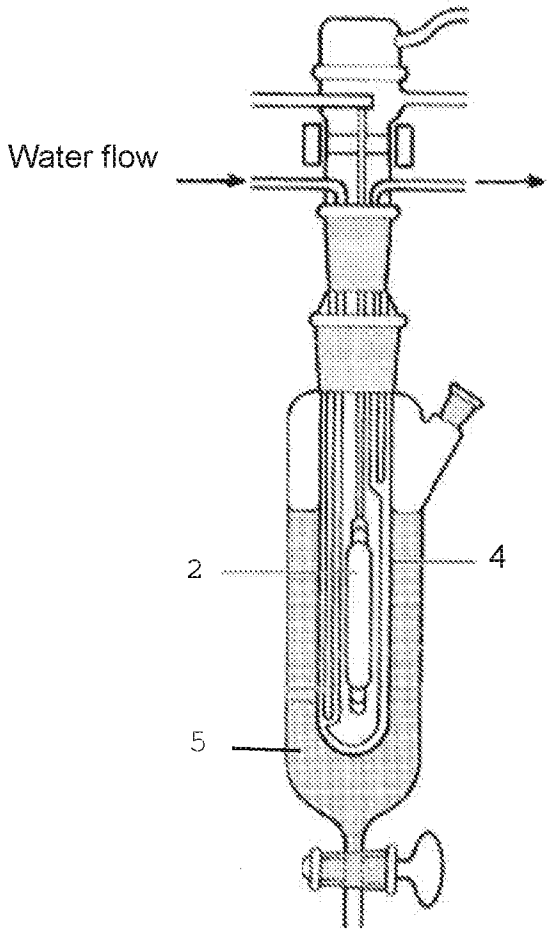

Fig. 1 (prior art)

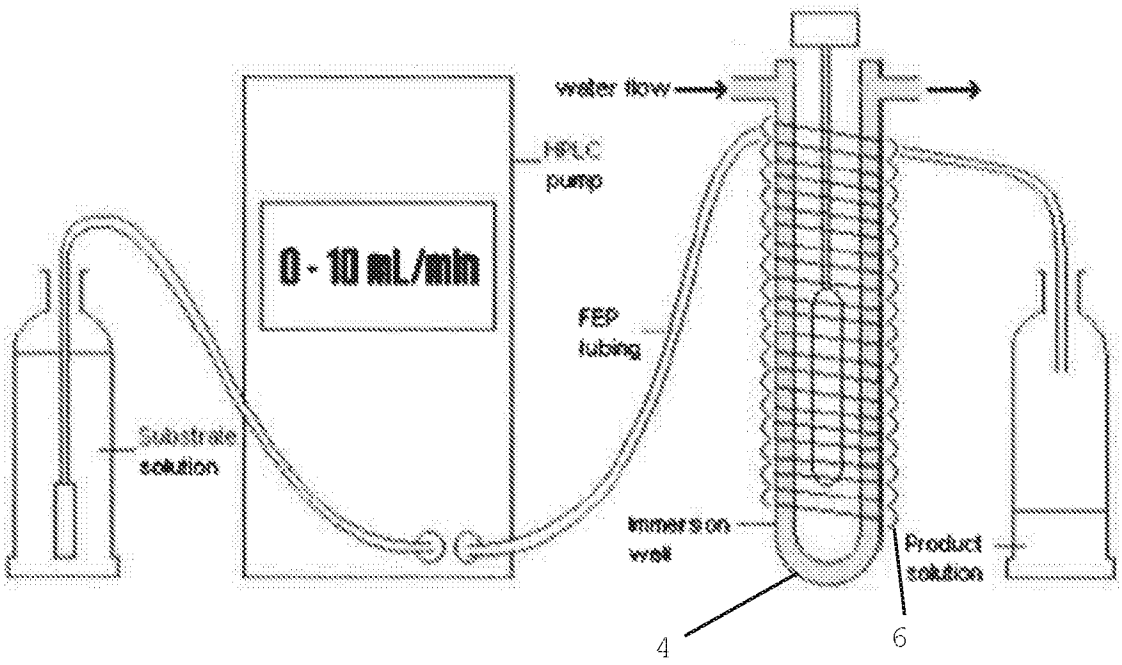

Fig. 2 (prior art)

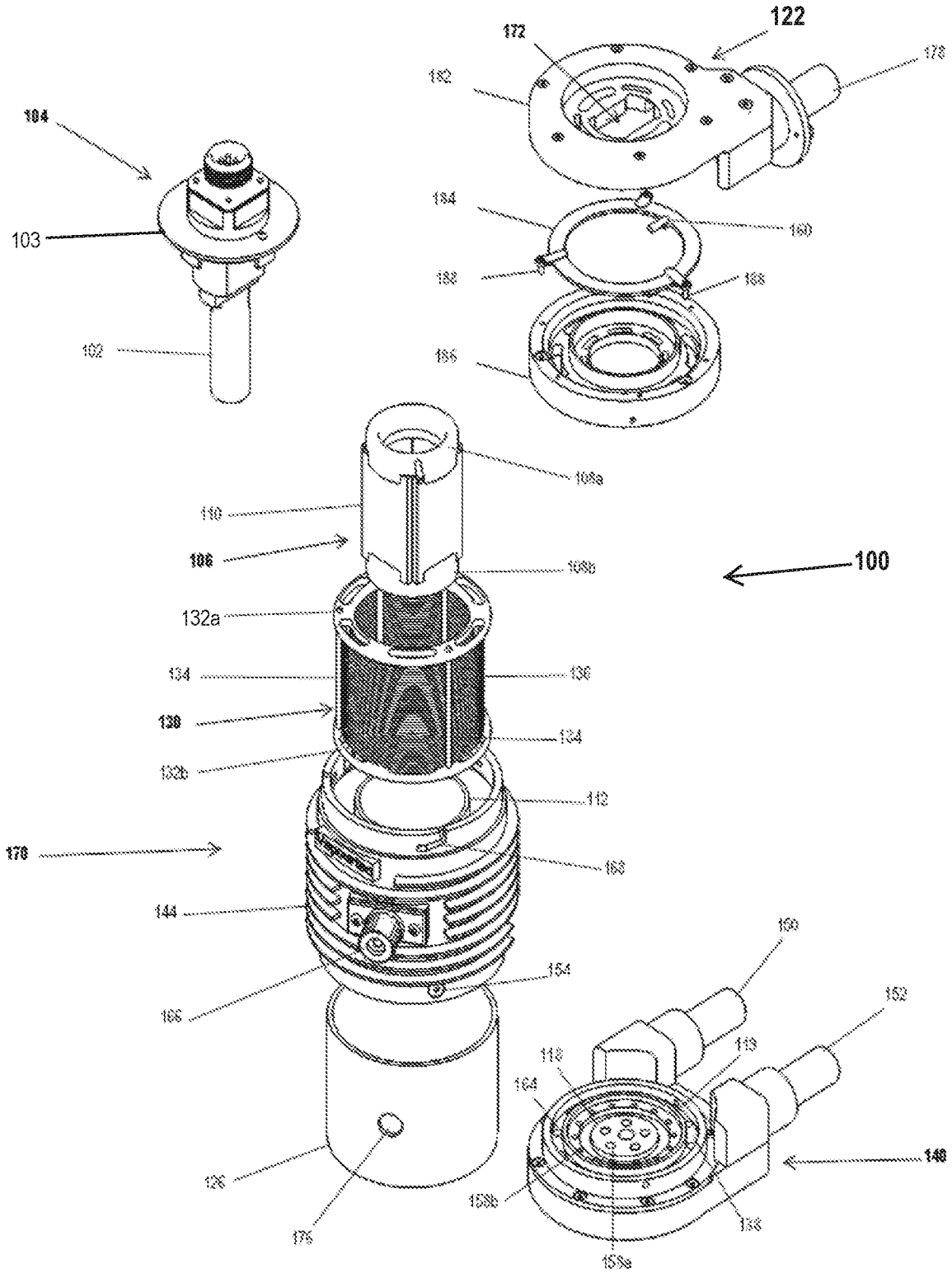
122
172
182
178
104
103
184
160
188
188
102
186
108a
110
106
108b
100
132a
134
136
130
134
132b
112
170
168
144
150
154
152
166
118
119
164
140
126
158b
138
176
158a

Fig. 3

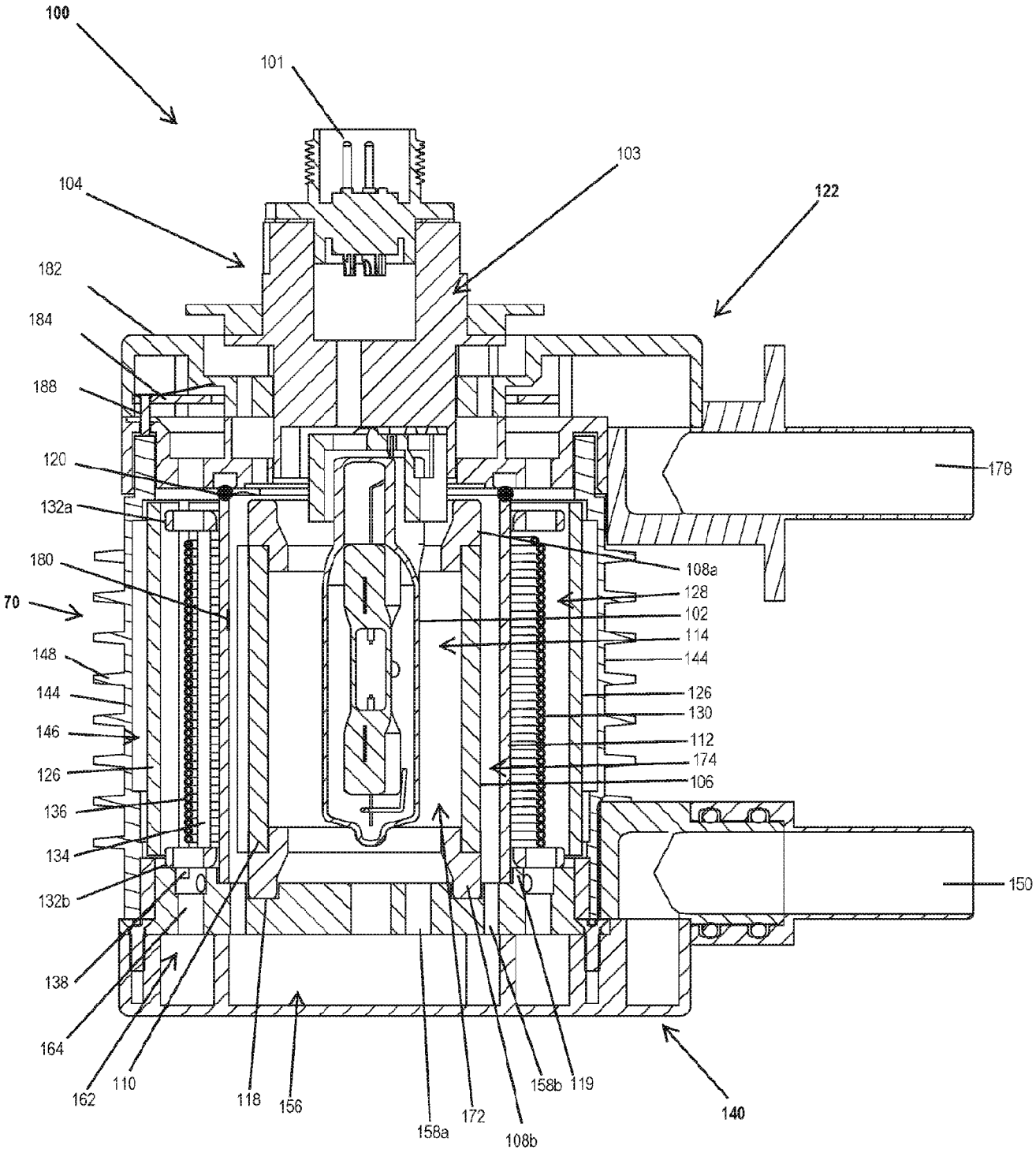
100
101
103
104
122
182
184
188
120
178
132a
180
108a
70
128
102
114
148
144
144
126
130
146
112
174
126
106
136
134
150
132b
138
164
162
110
118
156
158a
172
158b
119
108b
140

Fig. 4

INTERNATIONAL SEARCH REPORT

International application No
PCT/GB2015/050290

A. CLASSIFICATION OF SUBJECT MATTER
INV. B01J19/00 B01J19/12
ADD.

According to International Patent Classification (IPC) or to both national classification and IPC

B. FIELDS SEARCHED

Minimum documentation searched (classification system followed by classification symbols)
B01J

Documentation searched other than minimum documentation to the extent that such documents are included in the fields searched

Electronic data base consulted during the international search (name of data base and, where practicable, search terms used)
EPO-Internal, WPI Data

C. DOCUMENTS CONSIDERED TO BE RELEVANT

Category*	Citation of document, with indication, where appropriate, of the relevant passages	Relevant to claim No.
X	US 7 875 248 B1 (JACHUCK ROSHAN [US]) 25 January 2011 (2011-01-25) column 3, lines 16-17,26-27 column 8, lines 22-44; figures 4,8	1-3,6, 19,23,35
X	US 7 205 444 B1 (CHIU YUON [US] ET AL) 17 April 2007 (2007-04-17) column 7, lines 55-67; figures 2-3	1-3,6, 19,23,35
A	WO 2013/030247 A1 (MAX PLANCK GESELLSCHAFT [DE]; SEEBERGER PETER H [DE]; KOPETZKI DANIEL) 7 March 2013 (2013-03-07) pages 30,52-54; figures 1,4; example 5	1-36
A	GB 2 248 835 A (DOW STADE GMBH [DE]) 22 April 1992 (1992-04-22) page 8, lines 24-35; figure 1	1-36

-/--

[X] Further documents are listed in the continuation of Box C.

[X] See patent family annex.

* Special categories of cited documents :

"A" document defining the general state of the art which is not considered to be of particular relevance

"E" earlier application or patent but published on or after the international filing date

"L" document which may throw doubts on priority claim(s) or which is cited to establish the publication date of another citation or other special reason (as specified)

"O" document referring to an oral disclosure, use, exhibition or other means

"P" document published prior to the international filing date but later than the priority date claimed

"T" later document published after the international filing date or priority date and not in conflict with the application but cited to understand the principle or theory underlying the invention

"X" document of particular relevance; the claimed invention cannot be considered novel or cannot be considered to involve an inventive step when the document is taken alone

"Y" document of particular relevance; the claimed invention cannot be considered to involve an inventive step when the document is combined with one or more other such documents, such combination being obvious to a person skilled in the art

"&" document member of the same patent family

Date of the actual completion of the international search	Date of mailing of the international search report
17 April 2015	28/04/2015

Name and mailing address of the ISA/	Authorized officer
European Patent Office, P.B. 5818 Patentlaan 2 NL - 2280 HV Rijswijk Tel. (+31-70) 340-2040, Fax: (+31-70) 340-3016	Veronesi, Sergio

1

Form PCT/ISA/210 (second sheet) (April 2005)

INTERNATIONAL SEARCH REPORT

International application No
PCT/GB2015/050290

C(Continuation). DOCUMENTS CONSIDERED TO BE RELEVANT

Category*	Citation of document, with indication, where appropriate, of the relevant passages	Relevant to claim No.
A	JP 2007 075682 A (UNIV OSAKA PREFECTURE; DAINIPPON SCREEN MFG; SHIONOGI & CO) 29 March 2007 (2007-03-29) abstract; figures 1-6 -----	1,35

1

INTERNATIONAL SEARCH REPORT

Information on patent family members

International application No
PCT/GB2015/050290

Patent document cited in search report	Publication date	Patent family member(s)	Publication date
US 7875248 B1	25-01-2011	US 7875248 B1	25-01-2011
		US 2011200731 A1	18-08-2011
US 7205444 B1	17-04-2007	CN 101356144 A	28-01-2009
		EP 1945599 A2	23-07-2008
		JP 2009515880 A	16-04-2009
		KR 20080066878 A	16-07-2008
		US 7205444 B1	17-04-2007
		WO 2007058836 A2	24-05-2007
WO 2013030247 A1	07-03-2013	CN 103764660 A	30-04-2014
		EP 2751113 A1	09-07-2014
		US 2014364630 A1	11-12-2014
		WO 2013030247 A1	07-03-2013
GB 2248835 A	22-04-1992	NONE	
JP 2007075682 A	29-03-2007	NONE	