PATENT SPECIFICATION (11) 1 580 103

1 580 103

(21) Application No. 48392/77 (22) Filed 21 Nov. 1977

(31) Convention Application No. 752777 (32) Filed 20 Dec. 1976 in

(33) United States of America (US)

(44) Complete Specification Published 26 Nov. 1980

(51) INT. CL. [3] B65H 29/60 31/24

(52) Index at Acceptance
B8R 652 662 671 P3

(72) Inventors: FREDERICK WILLIAM JOHNSON
CARL ALLAN QUEENER
JAMES CHARLES ROGERS

(54) COLLATOR APPARATUS AND METHOD OF CONTROL

(71) We, INTERNATIONAL BUSINESS MACHINES CORPORATION, a Corporation organized and existing under the laws of the State of New York in the United States of America, of Armonk, New York 10504, United States of America do hereby declare the invention for which we pray that a patent may be granted to us, and the method by which it is to be performed, to be particularly described in and by the following statement:-

This invention relates to collator apparatus and methods of controlling the operation therof. Collators are used to produce multiple collated sets of multi-page documents which have been printed or copied.

Such a collator is disclosed in the specification of our copending patent application No. 29384/77 (Serial No. 1562448).

The limiting factors in collator operation are the number of collator bins available, and the sheet holding capacity of each individual bin, or at least the smallest of the bins. The smaller the collator, the more important is this limitation. If a collator has a small number of bins each with a limited sheet capacity, the operational limits are reached much earlier than with a large collator with many bins each with a large sheet holding capacity.

The collator disclosed in the above-mentioned specificatin has ten bins, each with a capacity of twenty sheets. Although this collator satisfies a very large number of customer requirements, it reaches a limit as soon as documents with more than twenty original pages have to be copied and collated. When, for example, five copies of a twenty-five page document have to be produced, collation has to be made in two steps. The first step executed by the operator would be to copy and collate the first twenty pages of the original. Then, the copies are removed from the collator. The second step would be to copy and collate the remaining five pages of the document, and then to attach the sets to the already unloaded twenty page sets. This merging requires operator intervention and may introduce mistakes by wrong collation of sets.

According to the invention, apparatus for collating multisheet sets comprises a number K of sheet receiving bins, sheet deflector means operable to deliver sheets to selected bins, and control means operable in response to a request to collate a number M of sets, M being smaller than K, to group K actual bins into H virtual bins, such that $H \geq M$, at least one of the virtual bins consisting of at least two actual bins, and to operate the deflector means to feed successive sheets into appropriate actual bins of successive virtual bins.

The invention also includes a method of controlling the operation of a sheet collator with K bins, when collating a number M of multi-sheet sets, where $M < K$, comprising grouping the K actual bins into H virtual bins, where $H \geq M$, at least one of the virtual bins consisting of at least two actual bins, and collating the M sets into the H virtual bins.

The scope of the invention is defined by the appending claims; and how it can be carried into effect is hereinafter particularly described with reference to the accompanying drawings, in which:-

Figure 1 is a schematic view of a xerographic copier incorporating a collator according to the present invention;

Figure 2 shows the sheet paper path into the collator;

Figure 3 is a detailed isometric view of the deflector unit of the collator and its guiding system;

Figure 4 is a side view of the deflector unit on the line 4–4 in Figure 3;

Figure 5 is a cross-section of the deflector unit on the line 5–5 in Figure 3;

Figure 6 depicts a detail of the deflector

drive;

Figure 7 shows a schematic layout of control means for the collator;

Figure 8 is a table showing the relationship between copy selection and bin configuration in the described embodiment; and

Figures 9A to *9E* show flowcharts describing the functions carried out by collator control means.

In a xerographic copier 101 (Figure 1) a document which is to be copied is placed on a document glass 102 and imaged via an optical system 104, 105, and 106 onto a photoconductive xerographic drum 103 which has been precharged by a precharge unit (not shown). Exposure of the drum 103 discharges it selectively, so that a latent electrostatic image is formed on the drum 103. The image is developed by developer and toner at a developing station 107. In the meantime, paper has been fed along a paper path 114 from a paper roll 108 to cutting knives 109 by which it is cut to sheets of the desired length. In a transfer station with a transfer corona 110, the developed or toned image is transferred to the sheet of paper. After that, the remaining toner is cleaned off the drum 103 by cleaning station 111. Additionally, the entire surface of the drum is exposed to light to dissipate the electrostatic charge. The photoconductor drum is then ready for the following cycle. In the mean time, the toner transferred to the paper is fused, i.e. heated and melted onto the paper, in a radiant fusing station 115. The thus produce copy is now fed via a vacuum transport belt 112 over roll 116 to a movable collator deflector 117 and into one of the bins of a collator 113. The collator 113 consists of ten bins, each having a sheet capacity of 20.

It will be appreciated that other forms of copier, printer or duplicator may be used to produce sheets for collation and that other forms of collator may be used. Collators of other sizes and bin capacities may be used, as may be more than one collator even if the collators have different sizes.

The copier can be modified in various ways, for example, the roll paper supply can be replaced by a cut sheet paper supply; the radiant fuser can be replaced by a hot roll fuser and the transport system does not necessarily need to be a vacuum system. There may be a paper detach arrangement to loosen the paper from the drum 103 or a copy discharge station.

The copier 101 includes a collator control 118, which may be a microprocessor serving to control the copier function as well as the collator function. Examples of suitable microprocessors are described in the specifications of our copending patent applications Nos. 35561/77 (Serial No. 1579755) and 35559/77 (Serial No. 1532609). It is not necessary to use a microprocessor for control the collator, although this may be the most economical way. The collator control can be effected by electronic hardware or by electromechanical means or a mixture of these.

In the paper path between the fusing station and the collator, a sheet is held onto the transport belt 112 (Figure 2) by vacuum which is applied to vacuum chamber 201. A vertical paper baffle 202 serves as an additional guide for the sheet which is then fed over roll 116, supported by deflector guide 203 and small rolls 208 and 209.

Roll 116 is used to accelerate the sheet. Whereas, for example, the sheet speed in the paper path before roll 116 is approximately 24 centimetres per second (9.3 inches per second), it is accelerated to 76 centimetres per second (30 inches per second). This acceleration is necessary for proper stacking of the sheets in collator 113. This is due to the fact that the movable deflector 117 needs some time to step from bin to bin and back from the last bin into its initial position

The sheet, accelerated by roll 116, is now fed onto main guide 204, being held down by a short upper guide 205.

The vertical baffle 202, the deflector guide 203, the main guide 204 and the upper deflector guide 205 are basically stationary, though they may be pivotable or otherwise removable for the clearance of paper jams.

When the sheet, which is moving on main guide 204 reaches the movable deflector unit 117, it is deflected by a lower deflector guide 206, which partially extends through slits in main guide 204, into the nip between deflector drive and backup rolls 210 and 211. The sheet is held down by upper deflector guide 207. Both guides 206 and 207 as well as the rolls 210 and 211 are movable with the deflector unit 117. Thus, these parts remove and feed each sheet they receive from stationary main guide 204 into the bin 212 which is above them.

The bins 212 consist essentially of slightly inclined walls 213, each of which has on its lower end a lip 214 extending toward the next wall, leaving a small slit open to allow paper feeding into the bin. The last bin has a similar inclined wall without a lip. The sheet is fed into the bin 212 with a speed high enough to move its trailing edge a little way beyond the lip 214 into the bin. Because of the inclination of the walls, the sheet falls down so that its trailing edge rests on lip 214. Each bin 212 mayinclude retainer means to urge the sheets towards the wall with the lip. Since roller 116 accelerates the sheets, the gap between two successive sheets is increased to allow the movable deflector unit 117 to step from bin to bin and to be transported back from the last bin (the

left hand bin in Figure 2) to its position, as shown, under the first bin.

Return switch 215 is arranged such that it detects when the deflector unit 117 is positioned under the first bin 212. Thus, it serves as return switch, indicating the home or initial position of deflector unit 117. The output signal produced by return switch 215 forms one input to the collator control 118.

The deflector unit 117 (Figure 3) consists of a deflector frame 305 with two flanges 306 and 307 extending perpendicularly at the ends. Flange 307 bears a gear box 308 to which a drive motor 301 is fixed.

The gearbox 308 contains a gear system which drives the sheet feed system of the deflector unit 117 as well as returning it. The sheet feed drive consists of a motor gear 302 which is fixed to the drive shaft of the motor 301, and a drive roll gear 303 fixed to a drive roll shaft 304 which is rotatably mounted in flanges 306 and 307. Drive roll shaft 304 bears driven drive rolls 210 and 210'. A sheet is fed between this pair of drive rolls and an associated pair of backup rolls 211 and 211' carried on a shaft 504. The sheet to be fed is directed by the lower deflector guide 206 and the upper deflector guide 207.

A small gear 324 on drive roll shaft 304 drives a larger gear 309 constantly. This constantly driven arrangement of gears is indicated by solid arrows on the respective gears in the drawings. A gear 310 coaxial with gear 309 is driven by the latter through a selectively engageable return clutch (Figure 6). Gear 310 drives deflector drive pinion gear 312 through an intermediate gear 311. The gear 312 is secured to a deflector drive shaft 313 which extends across the deflector unit 117 and carries a similar deflector drive pinion gear 312' at its other end.

When the return clutch between large gear 309 and gear 310 is engged, deflector drive pinion gears 312 and 312', which mesh with gear racks 315 and 315' respectively, drive deflector unit 117 which is guided by guide rolls 317, and 317' and 318. The guide rolls 317 and 318 engage a guide rail 319 and provide horizontal guidance for the deflector unit. Lateral guidance is provided by a guide roll 321 engaging a U-shaped guide rail 320.

Deflector drive spring 314 is fixed with one end to deflector frame 305 and with its other end to deflector drive shaft 313. When the deflector drive unit 117 is moved to its initial position (as shown in Figure 2 and the upper lefthand position in Figure 3), the deflector drive spring is fully wound up. As soon as the deflector drive unit 117 reaches this position, the return clutch which connects large gear 309 with gear 310 is disengaged. During stepping, deflector unit 117 is moved by force of the wound up deflector drive spring 304. Stepping from bin to bin is controlled by a ratchet disc 316 (Figure 4) fixed to deflector drive shaft 313.

A collator frame 322 carries the racks 315 and 315' and the main paper guide 204 which has longitudinal slits 323 into which fingers of lower deflector guide 206 extend.

Sheets are fed into the collator from the left upper corner of Figure 3 and the initial position of deflector unit 117 under the first bin, is at the lefthand upper end of the collator frame 322.

The deflector unit 117 (Figure 4) is shown in its initial position in chain dotted lines and in solid lines in an intermediate position under one of the bins.

Ratchet disc 316 has three peripheral steps by which it can be blocked by a pawl 406 which is released by a solenoid 401. The increment solenoid 401 has an armature 402, which is pivotable around a dolly 405 and carries the pawl 406 held by a tension spring 403 against ratchet disc 316. Upon energisation of increment solenoid 401 by the collator control 118, armature 402 is attracted, disengaging pawl 406 from ratchet disc 316. The ratchet disc 316 is then free to rotate under the influence of drive spring 314 until a step is engaged by pawl 406 after the solenoid 401 has been de-energised. Ratchet disc 316 is always urged in a counter-clockwise direction (Figure 4) by the spring 314 to hold a step pawl 406.

The number of ratchet steps on the circumference of ratchet disc 316 is related to the radius of deflector drive pinion gears to let the deflector unit 117 step from one bin to the next one when the pawl 406 is released from one step and re-engages the next step on the disc 316.

A pulse of 50 milliseconds applied to the solenoid 401 effects this step by step movement.

The backup roll shaft 504 is mounted on an extension of the upper deflector guide 207 by a leaf spring 501, pressing the backup roll 211 against drive roll 210. A microswitch 502 has an actuating arm 503 which extends through one of the slits in the lower deflector guide 206 into the sheet path. This switch is used as input device for the collator control 118. Thus, a copy passing the deflector unit 117 delivers a pulse to collator control 118 which may be counted. The switch 502 is positioned so that all sheets in the paper path passing it cause it to be on as long as any part of the sheet is touching its actuator 503.

Gear 309 (Figure 6) is rotatably mounted on axle 601 and has an integral hub 602. Also rotataly mounted on the same axle 601 is the small gear 310 which has an integral hub 603. Around the hub 602 of the gear 309 is wound a clutch spring 604 with its end fixed thereto. The clutch spring 604 is also

wound around the hub 603 and its inner diameter is slightly larger than the outer diameter of hub 603. Thus, the assembly of gear 309, hub 602 and clutch spring 604 can rotate without affecting gear 310. A T-shaped clutch actuator 605 is held a short distance above the clutch spring 604 over the hub 603 by tension spring 609 acting on one arm of armature 606 of a return solenoid 607, which armature is pivotable around a dolly 608. If the return solenoid 607 is energised, armature 606 is attracted and clutch actuator 605 pressed down on to the rotating clutch spring 604. This pressure applied upon the outer diameter of the spring leads to a contraction of clutch sprig 604, coupling the hub 603 of the small gear 310 with the spring. Thus, large gear 309 and small gear 310 are coupled to each other, causing small gear 310 to turn in the counterclockwise direction. Engagement of the clutch and driving of small gear 310 serves to move the deflector unit 117 back into its initial position and simultaneously winds up deflector drive spring to serve as energy source for stepping the deflector unit. As soon as deflector unit 117 reaches its home position under the first bin 212 of the collator 113, return switch 215 (Figure 2) is actuated and the signal therefrom used to de-energise the solenod 607. Upon de-energisation of return solenoid 607, clutch actuator 605 is released from clutch spring 604, whereupon small gear 310 is disengaged from large gear 309.

The collator control circuitry schematically shown in Figure 7 includes collator logic 710.

Collator logic 710 performs several functions. It counts the sheets entering the collator by the use of the pulses from sheet switch 502. Furthermore, it requests collator carriage incrementation via increment solenoid control circuit 703 by actuating the increment solenoid 401. Additionally, it serves to return the deflector unit 117 by actuating the return solenoid via return solenoid control 704. Finally, collator logic 710 determines when the collator has been filled to its capacity and stops the copier and/or collator.

The operator of the copier/collator combination selects the collate mode by means of a mode selector 701. Additionally, he chooses with the copy selector 702 the number of copies or sets he wants to produce. Selection of collate mode by mode selector 701 causes the collator logic 710 to perform a "collate" function as opposed to a non-collating "stack" or "exit pocket" function as described in the specification of our patent application No. 29384/27 (Serial No. 1562448). The copy selector 702 is the means by which the operator indicates the desired number of copies of each original to be produced.

If the collate mode has been selected and the number M of copies selected is less than the number K of bins of the collator, there is no problem in collating copies, provided the number of originals is not more than the number L of sheets which can be stacked in each bin. If the number M is greater than K, then excess copies are directed to a non-collate overflow stack. If however, the number of originals exceeds the number L, then either the excess wheets are stacked uncollated, or collation stops and the collated copies must be removed by hand before the remainder of the originals are copied and the sheets collated.

If the number M is not more than K/2, the K bins can be grouped into virtual bins, each consisting of two or more adjacent actual bins. This enables the number of originals to exceed L, and collation to take place leaving the sheets of any one copy in adjacent actual bins of a virtual bin. More generally stated, K bins can be grouped into virtual bins each of N actual bins, where N is an integer greater than 1 and not more than K/2, whnever K/(N+1) is less than M which is not more than K/N. Succeeding sheets are then fed from the copier and directed to successive Nth actual bins of the collator, starting with the first bin. After L sheets for each of M copies, the collator directs sheets in the same way starting with the second bin and so on. The sheet capacity of each virtual bin, that is the number of originals which can be copied, is N x L. Where K/N is not an integer there will be one or more unused actual bins. The number will be the remainder R in the equation $K = M \times N + R$.

In operation, after the grouping into virtual bins, filling is controlled to enable to collation of a complete set in each virtual bin. For this, the deflector unit is stepped incrementally for a distance equal to the number of bins in each virtual bin.

In the embodiment described, the input command for the establishment of the virtual bins is given by the operator of the copier when defining the number of copies to be made. There are ten bins in the collator so that K=10 and each actual bin has a capacity of twenty sheets so that L=20. The logic determines the virtual bin division as soon as the operator has chosen the number M of copies to be made and collated. For a selection of two copies (M=2) in the collate mode (Figure 8), five (K/M) actual bins form a virtual bin. Actual bins 1 to 5 form virtual bin I, and actual bins 6 to 10 form virtual bin II. Collation of up to 100 pages is possible. For a selection of three copies (M=3) in the collate mode of the machine, three adjacent bins form a virtual bin. Actual bins 1 to 3 form virtual bin I, actual bins 4 to 6 form virtual bin II,

actual bins 7 to 9 form virtual bin III and the last actual bin 10 remains unused (R=1). Thus, collation of documents up to 60 pages is possible. If the operator selects four or five copies to be made, two actual bins form a virtual bin. Actual bins 1 and 2 form virtual bin I, actual bins 3 and 4 form virtual bin II, actual bins 5 and 6 form virtual bin III, actual bins 7 and 8 form virtual bin IV and actual bins 9 and 10 form virtual bin V, each virtual bin with a capacity of 40 sheets.

Increment solenoid control circuit 703 (Figure 7) causes the deflector unit 117 to step to the next bin by energising the increment solenoid 401. The number of incrementing steps is determined by the increment limit circuit 708. Inputs to the increment limit circuit 708 are derived from mode selector 701 and copy selector 702.

Return solenoid control circuit 704 causes the deflector unit 117 to return into its home position under the first bin (Bin No.1). As described below, it may also serve to step deflector unit 117 to the first non-full bin, unless the collator has been filled to capacity.

Associated with collator logic 710 are several counters. Sheet counter 705 counts the number of sheets delivered to each of the non-full bins. Full bin counter 706 indicates the number of full actual bins within each virtual bin. Virtual bin counter 707 indicates the virtual bin number corresponding to the present position of deflector unit 117.

Increment limit circuit 708 determines the number of actual bins to be skipped when deflector unit 117 moves from one virtual bin to the next. In other words, increment limit 708 determines the size of the virtual bins, i.e. the number N of actual bins contained in each virtual bin.

Associated with increment solenoid control circuit 703 is increment pulse counter 709 which counts the number of actual bins skipped during deflector unit incrementation and return.

Upon the operator selecting two copies to be made from each original, the increment limit circuit 708 switches to an increment limit of five. This means, that the deflector unit 117 is stepped after each sheet to the next virtual bin which is situated at a distance of five actual bins from the preceding one. Thus, the first sheet will be fed into actual bin 1 which, at the same time, is the first actual bin in virtual bin I. After this, deflector unit 117 is stepped forward by increment solenoid 401 five times and reaches actual bin 6 which forms the first bin of virtual bin II. The second sheet is thus fed into actual bin 6. Now, the virtual bin counter 707 shows that the second and last virtual bin has been reached. Thus, deflector unit 117 has to be returned to its original position which is done by actuating return solenoid 607 via return solenoid control circuit 704. As deflector unit 117 reaches its initial position under actual bin 1, return switch 215 is actuated. The next sheet again actuates sheet switch 502, thus advancing sheet counter 705 to count 2. After that, deflector unit 117 steps again under actual bin 6, into which the next sheet is fed.

Assuming that the number of originals is larger than the capacity of each actual bin, in the present case, the number of originals has to be larger than twenty. When twenty sheets have been fed into actual bin 1, full bin counter 706 is advanced. This indicates that the first actual bin has to be skipped. After return operation of the solenoid 607, the return solenoid control circuit 704 causes the solenoid 401 to be energised to step the deflector unit 117 under actual bin 2 which is the second bin and the first non-full bin in virtual bin I. After feeding a sheet into bin 2, deflector unit 117 is again advanced by five steps thus feeding the following sheet, which is the second copy of the twenty first original, into actual bin 7 which forms the second bin and first non-full bin of virtual bin II. Upon filling of actual bins 2 and 7, this procedure is repeated, filling actual bins 3 and 8, then bins 4 and 9 and then bins 5 and 10.

If the operator indicates that three copies of each original are required, the increment limit circuit 708 switches to an increment limit of three and controls incrementing and return of deflector unit 117 in the following maner. Upon feeding of the first sheet into actual bin 1 forming the first bin of vurtual bin I, increment solenoid control circuit 703 advances deflector unit 117 by three bins to actual bin 4, thus skipping actual bins 2 and 3. Bin 4 forms the first bin of virtual bin II. As soon as the next sheet is fed into actual bin 4, which is detected by sheet switch 502, deflector unit 117 is incremented by three bins to actual bin 7, forming the first bin of virtual bin III. Upon feeding the third sheet into actual bin 7, deflector unit 117 is returned into its home position. Actual bin 10 is not used when three copies are selected. As soon as full bin counter 706 indicates that the first actual bin of each virtual bin is filled, deflector unit 117 is moved under actual bins 2, 5, and 8, respectively. When these are filled, sheets are fed to actual bins 3, 6 and 9.

If the copy selector 702 is set to four or five, the collator control logic forms five virtual bins, with an increment limit of two. Upon selection of four copies to be made of each original, virtual bin V, consisting of actual bins 9 and 10 is not used and deflector unit 117 returned into its initial position upon feeding into virtual bin IV. The whole procedure is otherwise similar to that de-

scribed above.

In the flow charts of the functions performed by the logic circuits of the collator (Figures 9A to 9E), the numbers beside the blocks relate to components already described.

The functions of the collator control are set out in general in Figure 9*a*. After the start of the copier, the logic determines if the mode selector 701 has been set to the collate mode (if not, there is *no* collation). The logic then also has to determine whether the number of copies selected by the copy selector 702 is equal to or larger than 2 (if not, no collation is needed), equal to or greater than 6 (when normal collation is executed), is equal to 4 or 5 (when five virtual bins are formed), or is equal to 3 (when three virtual bins are formed). If the number of copies selected is 2, then two virtual bins are formed.

Figures 9B and 9C show in more detail the functions performed by collator logic 710. Figure 9B is related to the starting procedure, and the setting of the increment limit circuit 708, Figure 9C shows the general function of the control logic during collation.

Figure 9D shows the increment control function of increment solenoid control circuit 703 and Figure 9E shows the return control function of the return control circuit 704.

The flow charts are self-explanatory and are only an example of one possible functional implementation of the invention. The implementation itself can be by programming a computer, or by wiring hardware.

It will be appreciated that more than one collator module may be used, as is described in the specification of our co-pending patent application No. 29384/77 (Serial No. 1562448).

If, for example, the collator has two modules, the first module having five bins (K_1=5) each with a twenty sheet capacity (L_1=20), the second collator module having ten bins (K_2=10) each with a ten sheet capacity (L_2=10), a collation job of ten sets (M=10) each of twenty sheets cannot be performed by this collator in one run. If the ten bins of the second collator are grouped into five virtual bins by treating every two adjacent actual bins as one virtual bin with a capacity of twenty sheets, then the above collation job can be done in one single run. The first five sets will be collated into the actual bins of the first collator module. The second five sets will be collated into the five virtual bins of the second collator module.

The first of the ten actual bins of the second collator module will receive the first ten sheets of the sixth set, the second actual bin will receive the remaining ten sheets of the sixth set. Thus, the first, third, fifth, seventh and ninth actual bins of the second module will finally contain the first ten sheets of the second five sets, and the second, fourth, sixth, eights and tenth actual bins will be filled with the second ten sheets.

The same increase of set capacity is available for seven to nine copies. For five copies, a sheet capacity of forty is available, with four bins of the first module grouped as two virtual bins, the fifth bin of the first module and two bins of the second module grouped as a virtual bin, and the remaining eight bins of the second module grouped as two virtual bins. For three copies, a sheet capacity of sixty is available, grouping three bins of the first module as one virtual bin, two bins of each module as one virtual bin, and six bins of the second module as one virtual bin. This leaves two bins of the second module unused. For two copies, a sheet capacity of one hundred is available, grouping all the bins in each module as one virtual bin.

For six copies, a sheet capacity of thirty should be available, grouping one bin of each module as one virtual bin and three bins of the second module as the sixth virtual bin. This leaves two bins of the second module unused. For four copies, a sheet capacity of fifty should be available grouping four bins of the first module and two bins of the second module as two virtual bins, one bin of the first module and three bins of the second module as one virtual bin, and the remaining five bins of the second module as one virtual bin. The last two examples are not so convenient as the others.

The logic for two modules with different bin capacities would be more complicated than that for bins of equal capacity, but once the numbers and capacities of the collator bins is known, it can readily be calculated by those skilled in the art.

Generally, where there are two or more bins of smaller capacity, then other bins and the number of sets required is less than the total number of bins and exceeds the number of bins of larger capacity, an increase in sheet capacity can be achieved by grouping actual small bins into virtual bins. If the number of sets required is less than the number of bins of larger capacity, it may be possile to achieve an increase of sheet capacity by grouping bins of different capacities into virtual bins.

This can be extended to more than two collator modules as well as to different bin capacities in one single module. The basic condition is that the number M of multi-sheet sets to be collated is smaller than the number K of actual bins in any given arrangement. Then, by grouping preferably adjacent actual bins, virtual bins can be formed which are treated by the collator

control as if they were enlarged capacity bins.

The greatest flexibility is achieved however, by the use of a large number of small capacity bins.

WHAT WE CLAIM IS:-

1. Apparatus for collating multi-sheet sets comprising a number K of sheet receiving bins, sheet deflector means operable to deliver sheets to selected bins, and control means operable in response to a request to collate a number M of sets, M being smaller than K, to group K actual bins into H virtual bins, such that $H \geq M$, at least one of the virtual bins consisting of at least two actual bins, and to operate the deflector means to feed successive sheets into appropriate actual bins of successive virtual bins.

2. Apparatus for collating multi-sheet sets comprising a number K of sheet receiving bins, sheet deflector means operable to deliver sheets to selected bins, and control means operable in response to a request to collate a number M of sets, M being equal to half K, to group K actual bins into M virtual bins, each virtual bin consisting of two actual bins, and to operate the deflector means to feed successive sheets into appropriate actual bins of successive virtual bins.

3. Apparatus for collating multi-sheet sets comprising a number K of sheet receiving bins, sheet deflector means operable to deliver sheets to selected bins, and control means operable in response to a request to collate a number M of sets, M being less than half K, to group K actual bins into M virtual bins, each virtual bin comprising N adjacent actual bins, where N is an integer greatert than one and where $K=MN+R$ if M is no submultiple of K, and to operate the deflector means to feed successive sheets into appropriate actual bins of successive virtual bins, leaving R bins unused.

4. Apparatus for collating multi-sheet sets comprising a number K of sheet receiving bins, sheet deflecor means operable to deliver sheets to selected bins, and control means operable in response to a request to collate a number M of sets to group K actual bins into M virtual bins, each virtual bin consisting of N bins, where N is an integer greaer than one and $K/(N+1)<M\leq K/N$, and to operate the deflector means to feed successive sheets into appropriate actual bins of successive virtual bins.

5. Apparatus according to claim 1, 2, 3 or 4, in which the sheet deflector means is a single deflector movable to feed sheets selectively into any of the bins.

6. Apparatus according to claim 5, in which the sheet deflector means includes sheet transport means.

7. Apparatus according to claim 5 or 6, in which the sheet deflector means is incrementally movable along a rectilinear path from bin to bin.

8. Apparatus according to any preceding claim, including sheet detector means to provide an input into the control means in response to detection of a sheet fed into the collator.

9. Apparatus according to any preceding claim, including means for sensing the number M of sets selected for collection and providing an input to the control means in accordance therewith.

10. Apparatus according claim 9, including an operator controllable set selection means defining the number of sets to be collated.

11. Apparatus according to any preceding claim, including an operator controllable mode selection means to provide an input to the control means in response to collate mode selection.

12. Apparatus according to any preceding claim, including sensing means responsive to the filling of the first actual bin of a virtual bin to provide an input to the control means to operate the deflector means to feed the next sheet for that virtual bin to the next unfilled actual bin of that virtual bin.

13. Apparatus according to any preceding claim in combination with a sheet producing copier.

14. Apparatus for collating multi-sheet sets, substantially as hereinbefore particularly described with reference to the accompanying drawings.

15. A method of controlling the operation of a sheet collator with K bins, when collating a number M of multi-sheet sets, where $M<K$, comprising grouping the K actual bins into H virtual bins, where $H \geq M$, at least one of the virtual bins consisting of at least two actual bins, and collating the M sets into the H virtual bins.

16. A method of controlling the operation of a sheet collator with K bins, when collating a number M of multi-sheet sets, where $M=K/2$, comprising grouping the K actual bins at least into M virtual bins, each virtual bin consisting of two actual bins, and collating the M sets into the M virtual bins.

17. A method of controlling the operation of sheet collator with K bins, when collating a number M of multi-sheet sets, where $M<K/2$, comprising grouping the K actual bins into M virtual bins, each virtual bin comprising N adjacent actual bins, where N is an integer greater than one and where $K=MN+R$, if M is no submultiple of K, and collating the M sets into the M virtual bins, leaving R bins unused.

18. A method of controlling the operation of a sheet collator with K bins, when collating a number M of multi-sheet sets, comprising grouping the K actual bins into M virtual bins, each virtual bin comprising N actual bins, where N is an integer greater

than 1 and $K/(N+1)<M\leq K/N$, and collating the M sets into the M virtual bins.

19. A method according to any of claims 15 to 18, including sensing the filling of the first actual bin of a virtual bin and directing the next sheet for that virtual bin to the next unfilled actual bin of that virtual bin.

20. A method of controlling the operation of a sheet collator, substantially as hereinbefore particularly described.

RICHARD C. PETERSEN,
Chartered Patent Agent,
Agent for the Applicants.

Printed for Her Majesty's Stationery Office,
by Croydon Printing Company Limited, Croydon, Surrey, 1980.
Published by The Patent Office, 25 Southampton Buildings,
London, WC2A 1AY, from which copies may be obtained.

1580103 COMPLETE SPECIFICATION

7 SHEETS *This drawing is a reproduction of the Original on a reduced scale*

Sheet 1

FIG. 1

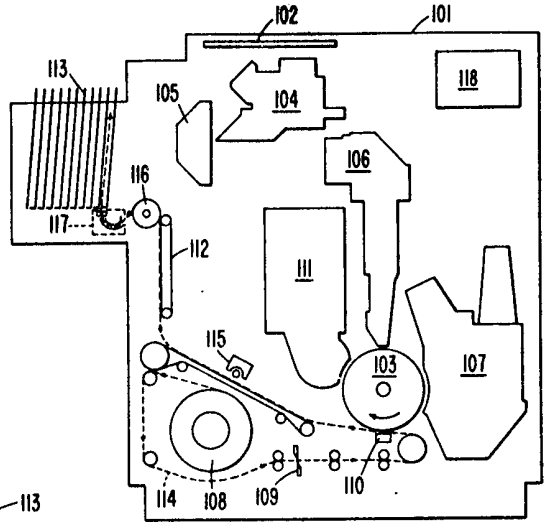

FIG. 2

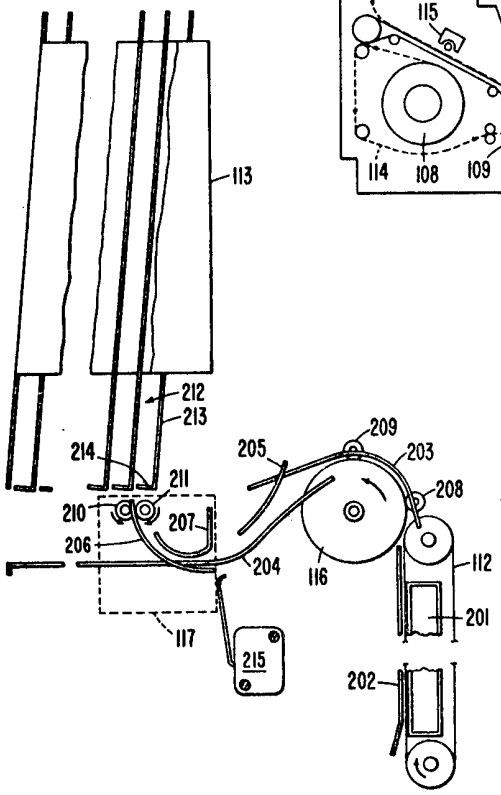

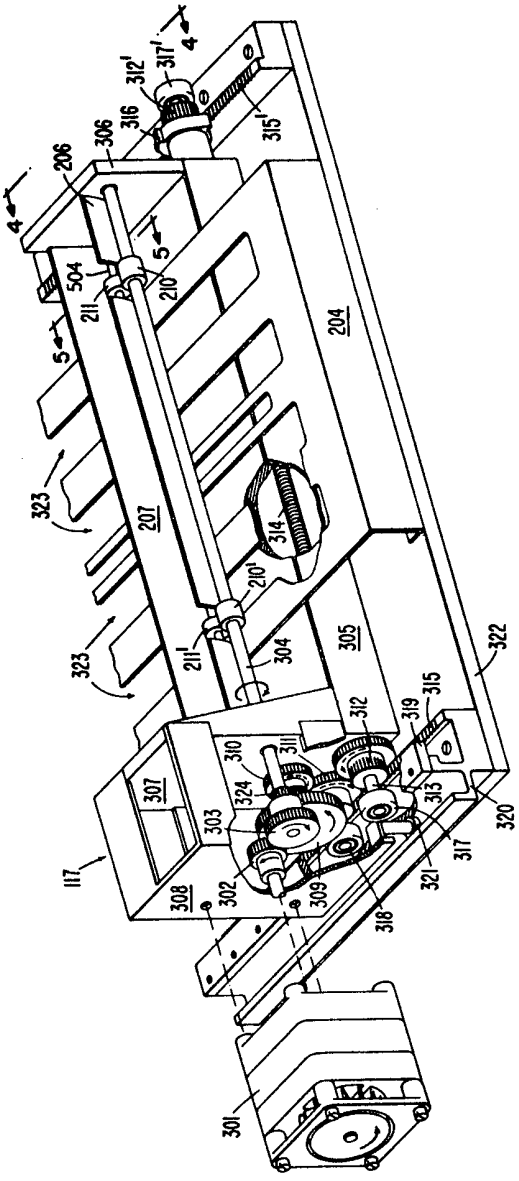
4
312'
317'
316
306
206
315'
4
5
504
211
210
204
5
323
207
314
210'
211'
304
305
322
323
312
319
315
310
311
307
324
303
313
320
117
308
302
309
318
321
317
301

FIG. 3

FIG.4

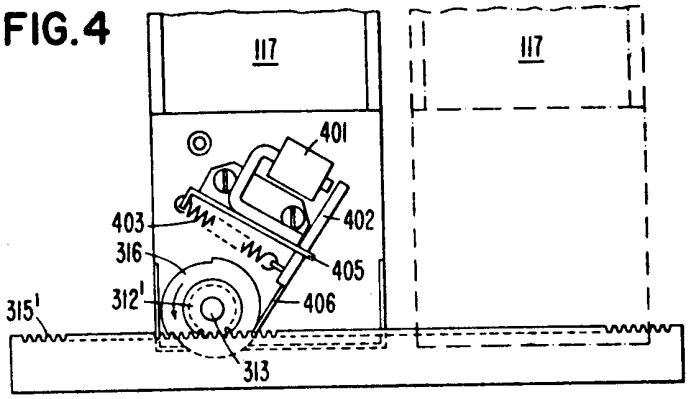

FIG. 5

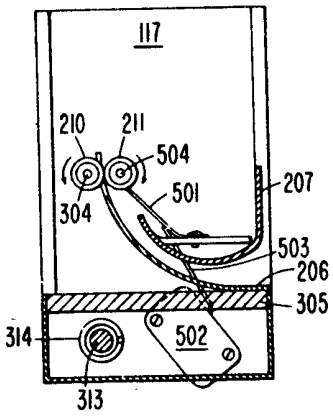

FIG. 6

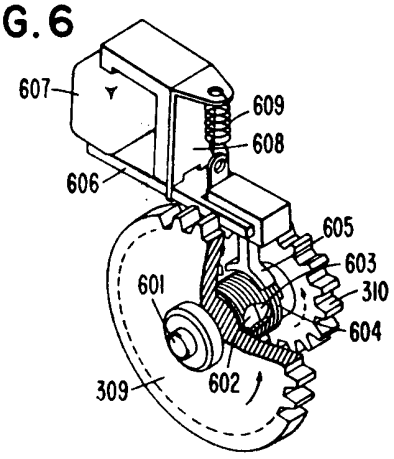

FIG. 7

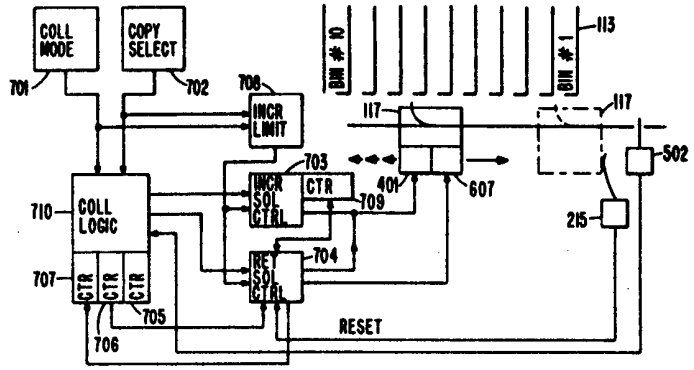

FIG. 8

COPY SELECT	INCREMENT LIMIT	VIRTUAL BIN CONFIGURATION
2	5	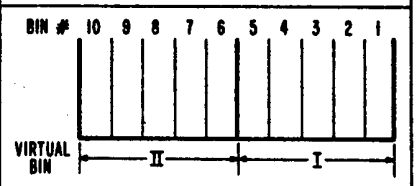
3	3	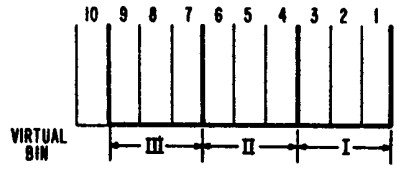
4 OR 5	2	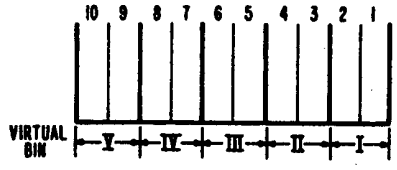

FIG. 9A

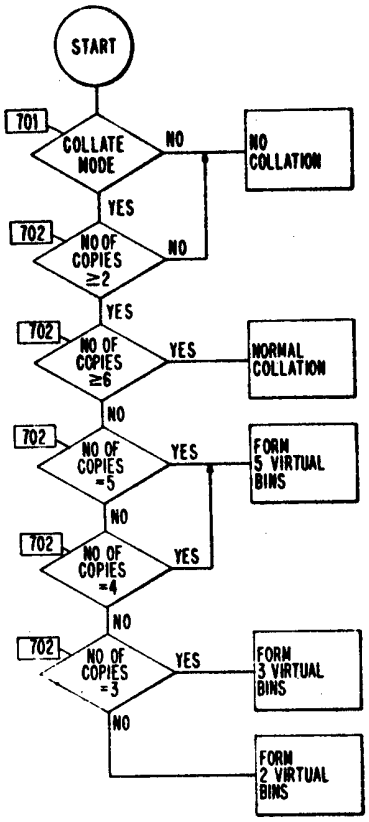
START
701
COLLATE MODE
NO
NO COLLATION
YES
702
NO OF COPIES ≥2
NO
YES
702
NO OF COPIES ≥6
YES
NORMAL COLLATION
NO
702
NO OF COPIES =5
YES
FORM 5 VIRTUAL BINS
NO
702
NO OF COPIES =4
YES
NO
702
NO OF COPIES =3
YES
FORM 3 VIRTUAL BINS
NO
FORM 2 VIRTUAL BINS

FIG. 9B

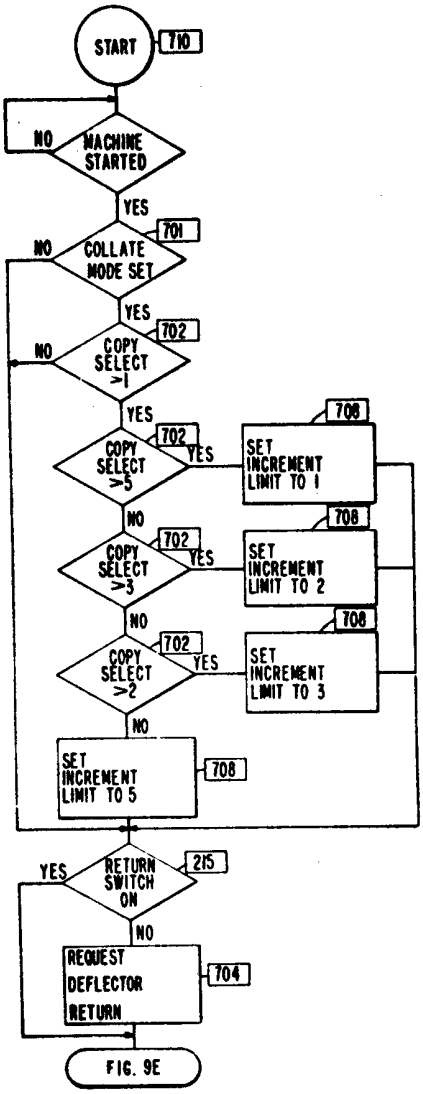
START
710
NO
MACHINE STARTED
YES
NO
701
COLLATE MODE SET
YES
NO
702
COPY SELECT ≥1
YES
708
702
COPY SELECT ≥5
YES
SET INCREMENT LIMIT TO 1
NO
708
702
COPY SELECT ≥3
YES
SET INCREMENT LIMIT TO 2
NO
708
702
COPY SELECT ≥2
YES
SET INCREMENT LIMIT TO 3
NO
SET INCREMENT LIMIT TO 5
708
YES
215
RETURN SWITCH ON
NO
REQUEST DEFLECTOR RETURN
704
FIG. 9E

FIG. 9C

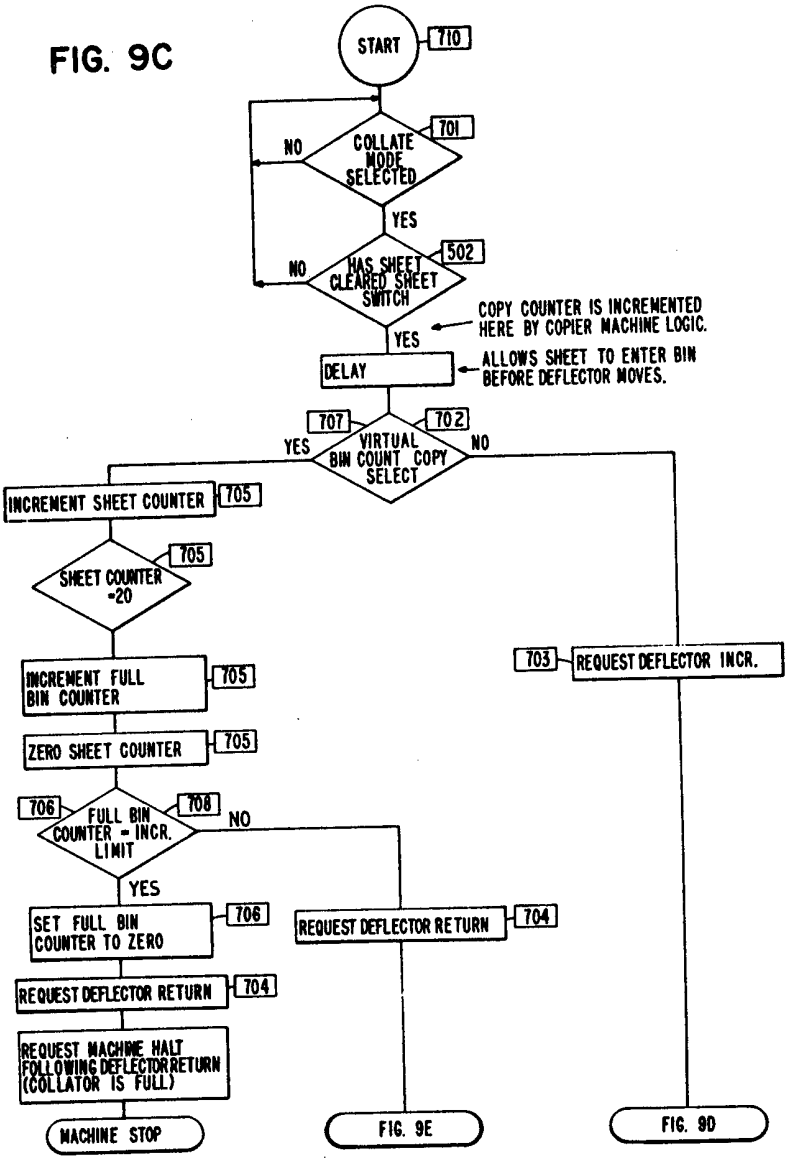
START
710
COLLATE MODE SELECTED
701
NO
YES
HAS SHEET CLEARED SHEET SWITCH
502
NO
YES
COPY COUNTER IS INCREMENTED HERE BY COPIER MACHINE LOGIC.
DELAY
ALLOWS SHEET TO ENTER BIN BEFORE DEFLECTOR MOVES.
707
702
YES
VIRTUAL BIN COUNT COPY SELECT
NO
INCREMENT SHEET COUNTER
705
SHEET COUNTER =20
705
INCREMENT FULL BIN COUNTER
705
ZERO SHEET COUNTER
705
706
FULL BIN COUNTER = INCR. LIMIT
708
NO
YES
SET FULL BIN COUNTER TO ZERO
706
REQUEST DEFLECTOR RETURN
704
REQUEST MACHINE HALT FOLLOWING DEFLECTOR RETURN (COLLATOR IS FULL)
MACHINE STOP
REQUEST DEFLECTOR RETURN
704
FIG. 9E
703
REQUEST DEFLECTOR INCR.
FIG. 9D

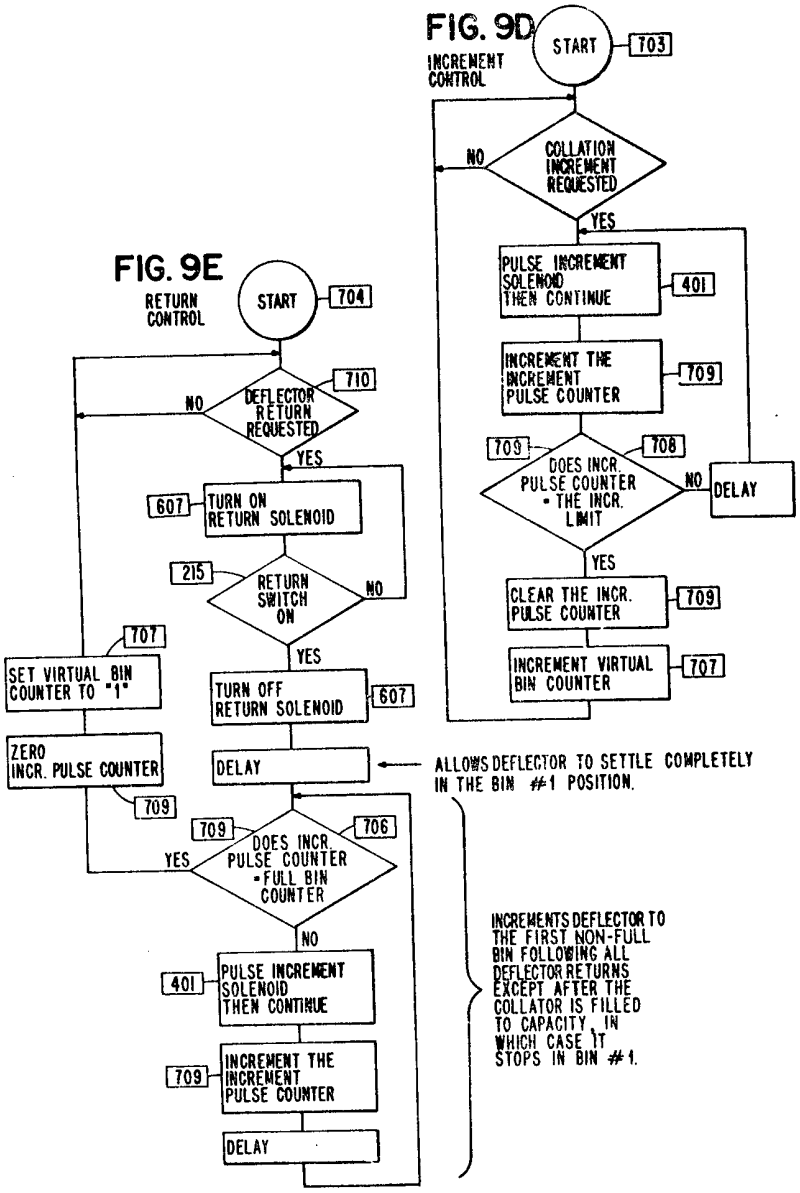
FIG. 9D
INCREMENT CONTROL
START
703
COLLATION INCREMENT REQUESTED
NO
YES
PULSE INCREMENT SOLENOID THEN CONTINUE
401
INCREMENT THE INCREMENT PULSE COUNTER
709
DOES INCR. PULSE COUNTER = THE INCR. LIMIT
709
708
NO
DELAY
YES
CLEAR THE INCR. PULSE COUNTER
709
INCREMENT VIRTUAL BIN COUNTER
707
FIG. 9E
RETURN CONTROL
START
704
DEFLECTOR RETURN REQUESTED
710
NO
YES
TURN ON RETURN SOLENOID
607
RETURN SWITCH ON
215
NO
YES
TURN OFF RETURN SOLENOID
607
DELAY
ALLOWS DEFLECTOR TO SETTLE COMPLETELY IN THE BIN #1 POSITION.
SET VIRTUAL BIN COUNTER TO "1"
707
ZERO INCR. PULSE COUNTER
709
DOES INCR. PULSE COUNTER = FULL BIN COUNTER
709
706
YES
NO
PULSE INCREMENT SOLENOID THEN CONTINUE
401
INCREMENT THE INCREMENT PULSE COUNTER
709
DELAY
INCREMENTS DEFLECTOR TO THE FIRST NON-FULL BIN FOLLOWING ALL DEFLECTOR RETURNS EXCEPT AFTER THE COLLATOR IS FILLED TO CAPACITY, IN WHICH CASE IT STOPS IN BIN #1.