United States Patent

[11] 3,599,399

[72] Inventor **Thomas J. Gallen**
1516 Buck Road, Feasterville, Bucks County, Pa. 19047

[21] Appl. No. **713,271**
[22] Filed **Mar. 8, 1968**
[45] Patented **Aug. 17, 1971**

[54] **APPARATUS FOR FILTERING POLLUTANTS**
3 Claims, 7 Drawing Figs.

[52] **U.S. Cl.** ..... **55/131**, 55/138, 55/139, 55/146, 55/148, 55/150, 55/154, 98/115 SB, 117/93.41, 118/628
[51] **Int. Cl.** **B03c 3/00**
[50] **Field of Search** ..... 239/15; 117/93.2, 93.4, 93.41; 55/1—14, 101—103, 113—115, 122, 128—133, 139—140, 142, 145—146, 148, 156, 138, 150, 154; 118/624, 628; 98/115 SB

[56] **References Cited**

UNITED STATES PATENTS

2,319,082	5/1943	Nestor	55/156 X
2,486,877	11/1949	Ransburg et al.	118/628 X
2,773,472	12/1956	Lamm	118/624
2,789,657	4/1957	Fields	55/139 X
2,936,851	5/1960	Cook	55/131
2,973,054	2/1961	Kurtz	55/131
3,376,156	4/1968	Whitaker et al.	117/93.2
2,922,085	1/1960	Drenning et al.	55/112 X
2,937,711	5/1960	Roberts et al.	55/112 X
3,469,371	9/1969	Gelfand	55/112 X
3,483,670	12/1967	Quintilian et al.	55/112

FOREIGN PATENTS

109,892	5/1924	Switzerland	55/131

OTHER REFERENCES

Bennett, Concise Chemical And Technical Dictionary, 1962, pg. 154 & 156

Primary Examiner—Dennis E. Talbert, Jr.
Attorney—Leo C. Krazinski

ABSTRACT: Apparatus and method for selectively withdrawing pollutants from an airstream by means of alternately grounded and charged filters.

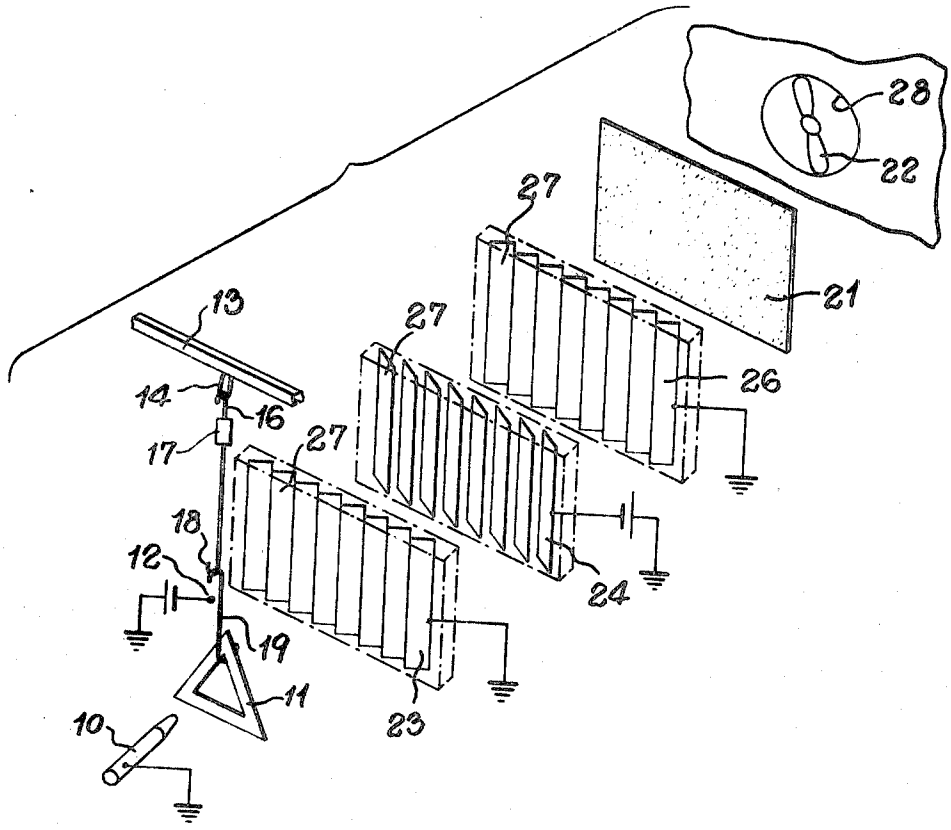

Fig. 1.

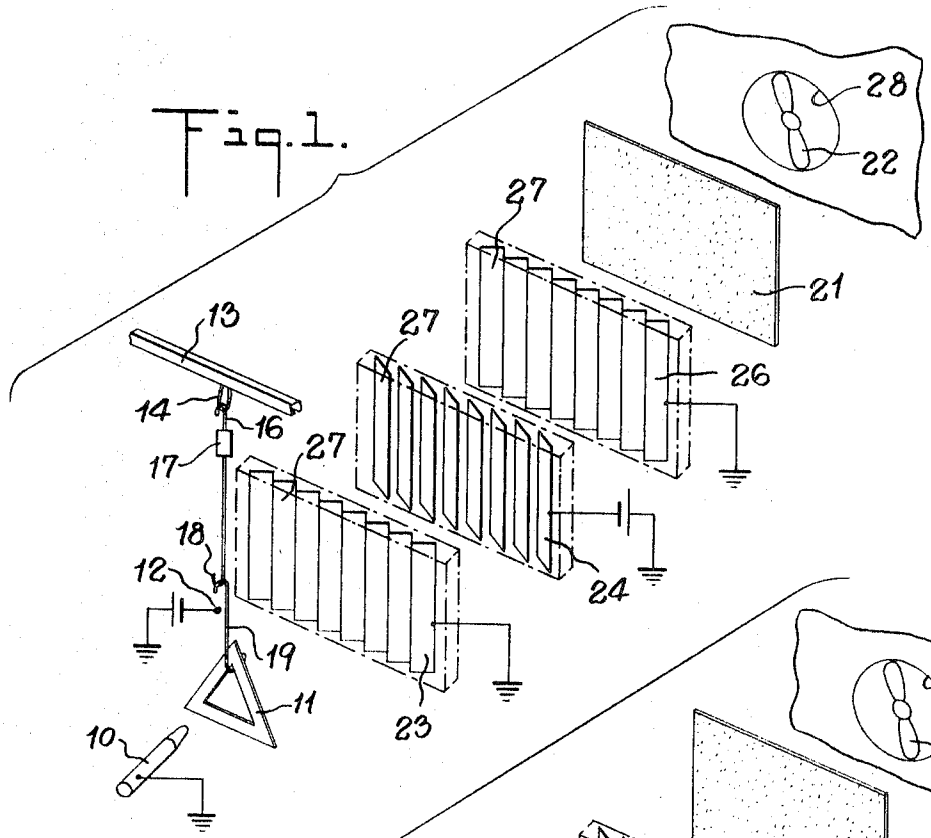

Fig. 2.

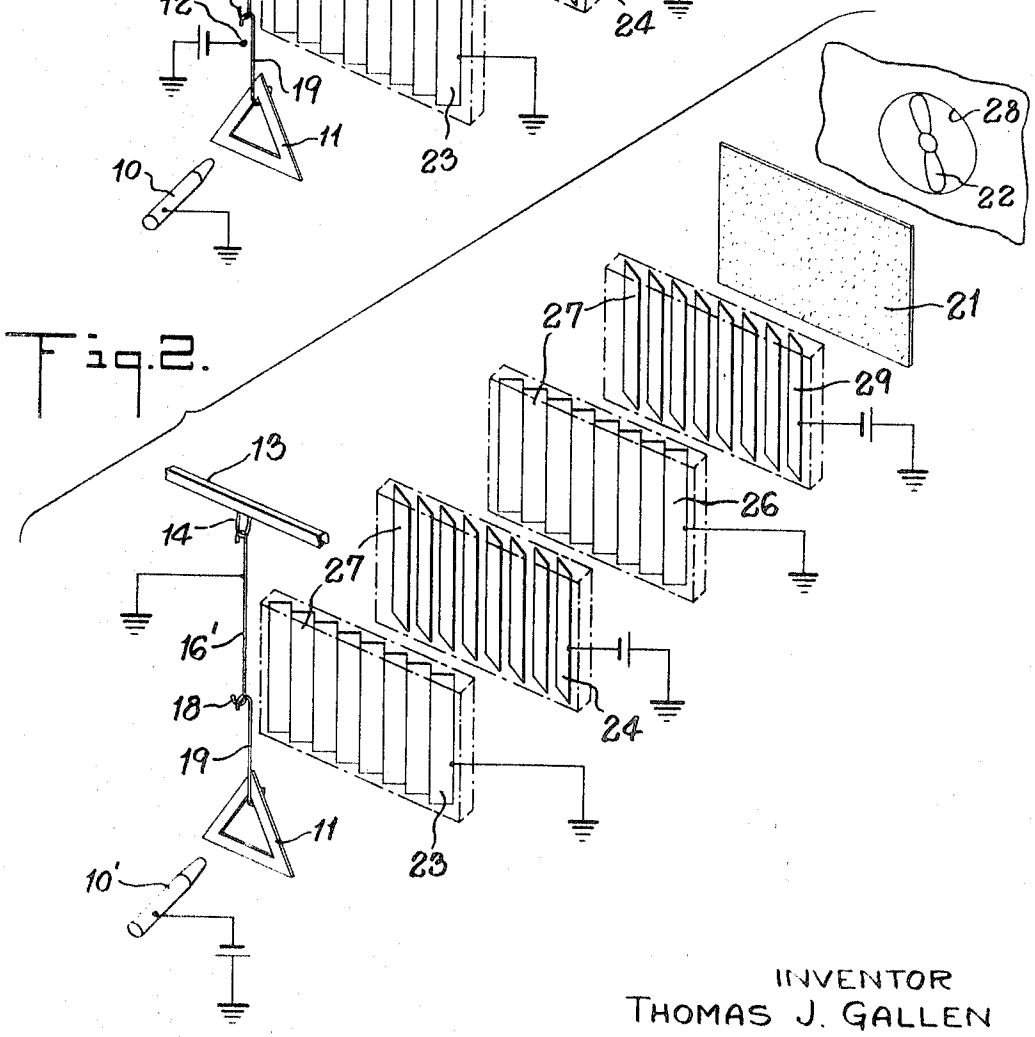

INVENTOR
THOMAS J. GALLEN
BY Leo C. Krazinski
ATTORNEY

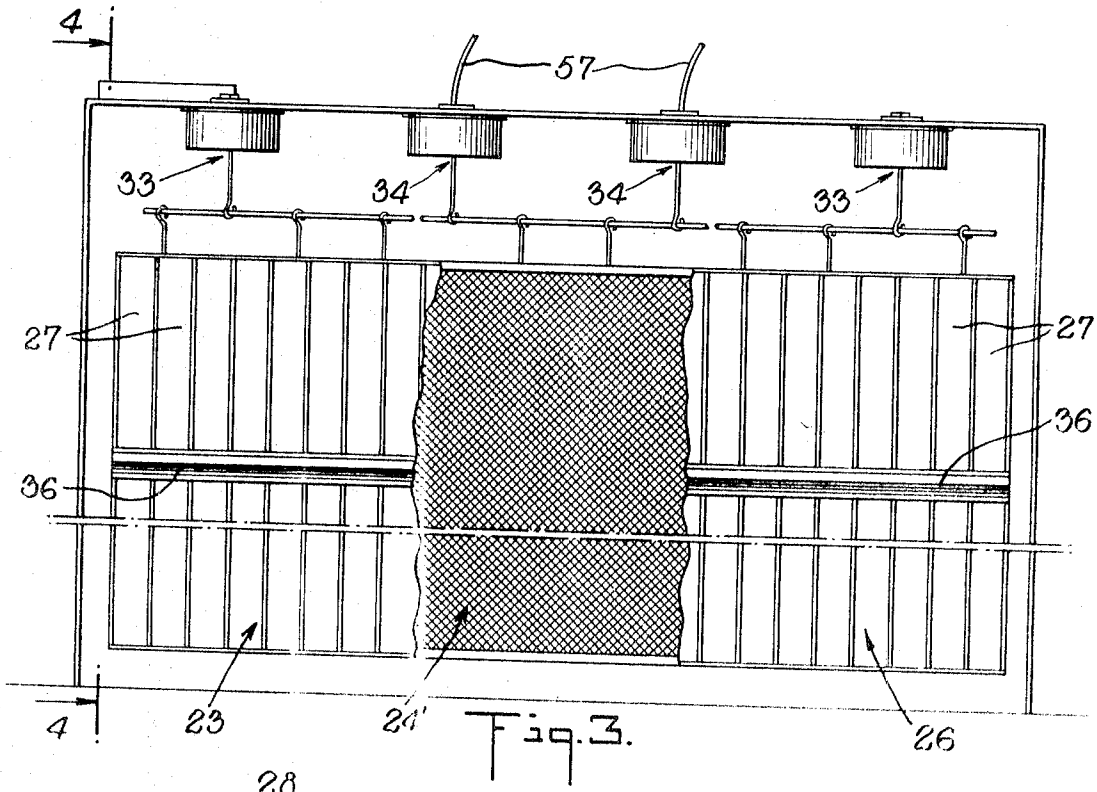

Fig. 3.

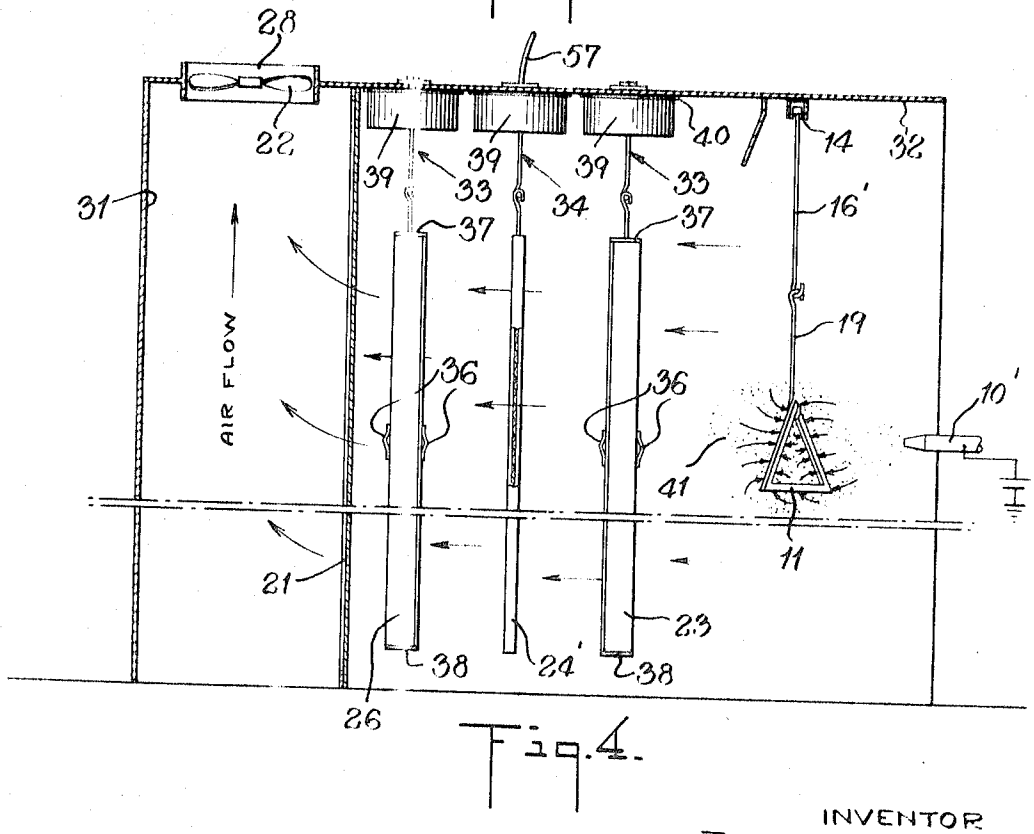

Fig. 4.

INVENTOR
THOMAS J GALLEN
BY Leo C. Krazinski
ATTORNEY

PATENTED AUG 17 1971

3,599,399

SHEET 3 OF 3

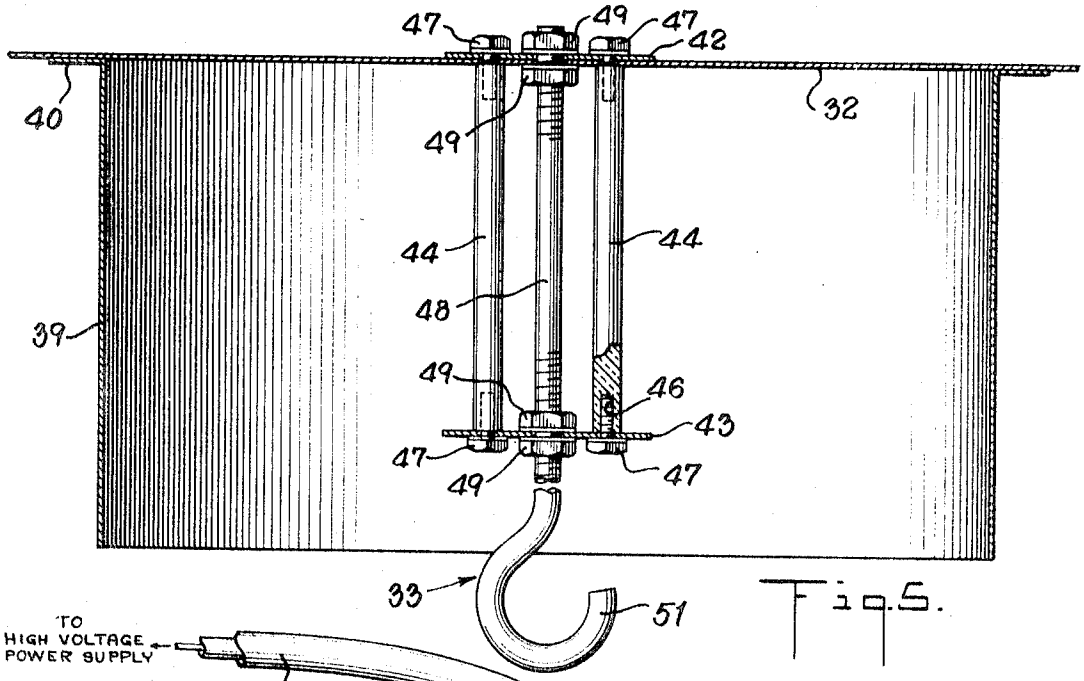

Fig. 5.

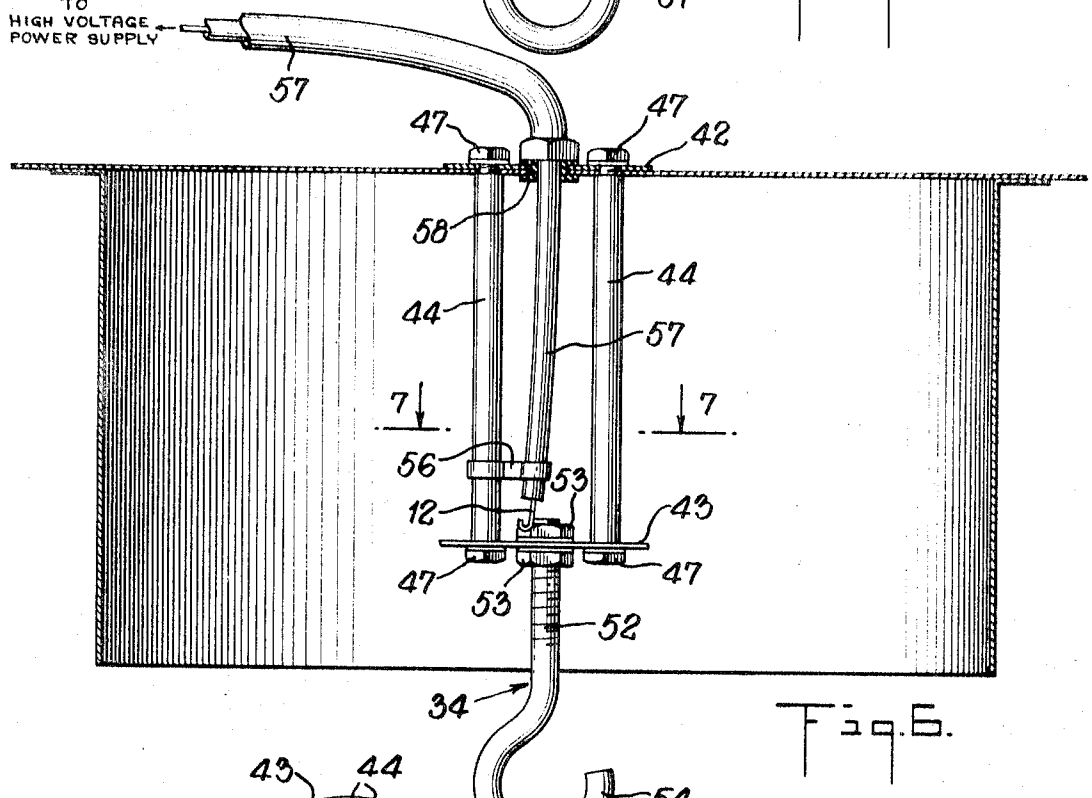

Fig. 6.

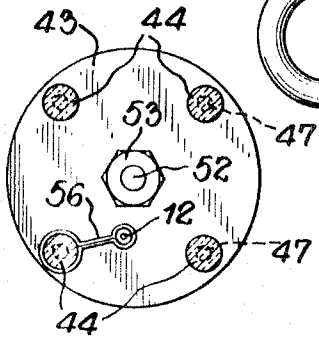

Fig. 7.

INVENTOR
THOMAS J. GALLEN
BY Leo C. Krazinski
ATTORNEY

APPARATUS FOR FILTERING POLLUTANTS

BACKGROUND OF THE INVENTION

1. Field of the Invention

The present invention relates to the removal of pollutants and, more particularly, to filters for removing paint and/or powder particles from an airstream during a paint- and/or powder-spraying operation.

2. The Prior Art

Heretofore, it has been conventional practice in the spray-painting field to employ paper, glass or water media for extracting paint particles from the airstream as it is passing therethrough.

SUMMARY OF THE INVENTION

Accordingly, an object of the present invention is to provide improved apparatus for filtering paint particles prior to reaching the conventional filters and thereby increase the life and efficiency of the latter.

Another object is to provide such apparatus which is compact and portable and which can be readily cleaned at the end of a day's operation and reinstalled the next morning.

Another object is to provide such apparatus which is adapted for use in conventional or electrostatic spray booths.

A further object is to accomplish the foregoing objects in a practical and economical manner.

Other and further objects will be obvious upon an understanding of the illustrative embodiment about to be described, or will be indicated in the appended claims and various advantages not referred to herein will occur to one skilled in the art upon employment of the invention in practice.

In accordance with the present invention the foregoing objects are generally accomplished by providing apparatus which comprises a plurality of filter banks in series arrangement between the workpiece being spray painted and the conventional filter with the filter banks alternately grounded and charged.

BRIEF DESCRIPTION OF THE DRAWINGS

A preferred embodiment of the invention has been chosen for purposes of illustration and description and is shown in the accompanying drawing, forming a part of the specification, wherein:

FIG. 1 is a diagrammatic view in perspective of a form of the invention showing a plurality of alternately grounded and charged filter banks, wherein a grounded gun is used for spraying paint onto a workpiece.

FIG. 2 is a diagrammatic view similar to FIG. 1 but for use with a charged spray gun.

FIG. 3 is a front elevational view of three filter banks in depth, with the front and intermediate filter banks partly broken away and in which the intermediate filter bank is of mesh construction.

FIG. 4 is a vertical sectional view taken along the line 4–4 on FIG. 3.

FIG. 5 is a vertical sectional view of one of the grounded connectors for supporting a grounded filter bank of the invention shown in FIG. 4.

FIG. 6 is a vertical sectional view of one of the insulated connectors for supporting a charged filter bank of the invention shown in FIG. 4.

FIG. 7 is a horizontal sectional view taken along the line 7–7 on FIG. 6 showing relative positions of the insulated connector and high-voltage wire for inductively charging the filter bank.

DESCRIPTION OF PREFERRED EMBODIMENT

Referring now to FIG. 1 of the drawings in detail, there is shown a paint-spraying system having a grounded gun 10 for spraying paint particles onto a workpiece 11, inductively charged by a high-potential wire 12, which workpiece is suspended from a track 13 by an endless chain 14, hook 16, insulator 17 having a hook 18 at its lower end for connection to a work hook 19 that supports the workpiece 11. For a more detailed description of this paint-spraying system reference may be had to application bearing Ser. No. 353,051 and filing date of Mar. 13, 1964, which matured into U.S. Pat. No. 3,376,156 on Apr. 2,1968.

In the above paint-spraying system, as well as in conventional paint-spraying systems, it has been found that a substantial amount of paint particles move past the workpiece 11 onto a conventional filter 21 interposed between the workpiece 11 and an exhaust fan 22. Consequently, in a comparatively short time the filter 21, which may be of paper, glass or water media, must be replaced.

In order to increase the efficiency and life of such filters, which are comparatively expensive, the invention herein, referring again to FIG. 1, comprises interposing between the workpiece 11 and the conventional filter 21 a grounded filter bank 23, a charged filter bank 24 and another grounded filter bank 26.

Each of the filter banks 23, 24 and 26 is preferably made of light gauge sheet metal, preferably about 26 gauge (0.0187 inch), in the general shape of venetian blinds with slats 27 set at about 45° angles and parallel with one another in a vertical plane, as viewed in FIG. 1. It will be noted that the slats 27 of the alternate filter banks 23 and 24 and alternate filter banks 24 and 26 are slanted in opposite directions, so as to provide for maximum air impingement. With the above filter-slat arrangement very little pressure drop will occur, as the air stream drawn by the exhaust fan 22 flows past workpiece 11 through filters 23, 24, 26 and 21 into exhaust duct 28. To control airflow the slats 27 may be disposed at variable distances, at variable angles, or parallel to one another, as shown on the drawings.

In FIG. 2 there is shown a paint-spraying system having a charged gun 10' for spraying paint particles onto a grounded workpiece 11 which is suspended from a track 13 by an endless chain 14, connector 16' having a hook at each end for connection to a work hook 19 that supports the workpiece 11. Here again a plurality of filter banks are interposed between the workpiece 11 and the conventional filter 21, namely, grounded filter bank 23, charged filter bank 24, grounded filter bank 26 and charged filter bank 29. The filter banks of FIG. 2 are similar in construction to those of FIG. 1 and it is to be noted that in each of FIG. 1 and FIG. 2 the filter bank 23 nearest to the workpiece 11 is grounded. This bank 23 is grounded in order to afford protection to the attendant, so that where a charged spray gun 10' is used, as in FIG. 2, an extra filter bank 29 is included. Of course, the number of filter banks to be employed is not to be restricted to that shown, since they may be more or less in accordance with the size of the spray booth and the amount of stray paint particles to be collected prior to reaching the conventional filter 21.

In FIGS. 3 and 4 are shown three filter banks between the grounded workpiece 11 and the conventional filter 21 in a spray booth 31 employing a charged spray gun 10'. The three filter banks comprise a grounded filter bank 23 of sheet metal-slat construction, hereinbefore described, adjacent the grounded workpiece 11, a charged filter bank 24' of mesh construction and another grounded filter bank 26 of sheet metal-slat construction, which is adjacent the conventional filter 21. The three filter banks are shown suspended from the ceiling 32 of the spray booth 31, grounded filter banks 23 and 26 being carried by conductive hangers 33 and charged filter bank 24' being carried by an insulated hanger 34, as will be described hereinafter in connection with FIGS. 5 and 6, respectively.

Each of the sheet metal filter banks 23 and 26 is preferably strengthened adjacent its top and bottom by outwardly bowed stiffeners 36 placed at each side thereof, as is readily seen in FIG. 4. Also, the sheet metal filter banks are of simple con-

struction comprising a flat top 37 and a similar flat bottom 38 between which the slats 27 are secured in any suitable manner, a by welding or bolt-nut connections.

The mesh construction used in filter bank 24' comprises four sheets of expanded metal 4 feet by 5 feet of 1/2-inch by 18-inch gauge material flattened to three-eighths inch by fifteen-sixteenths inch and framed. It might be mentioned that the mesh constructed filter bank is used in those instances where the space in the spray booth is limited. As is readily seen in FIG. 4, the filter bank 24' is of less depth or thickness than either of the filter banks 23, 26.

Between each of the hangers 33 and 34 and the ceiling 32 is shown a tubular shield 39 having a flange 40 for securement to the ceiling 32 of the spray booth 31. The air flow is readily apparent in FIG. 4 and can be seen as flowing from the right of the figure to the left past the electrostatic field 41 set up at the workpiece 11, through filter banks 23, 24', 26 and thence through conventional filter 21, after which the air flows upwardly through exhaust fan 22 into the exhaust duct 28.

Referring now to FIGS. 5, 6 and 7, the hangers 33 and 34 are shown in detail, each hanger comprising a circular top plate 42 and similar bottom plate 43 in which the top plate 42 is mounted above the metallic ceiling 32 of the spray booth 31. The two plates 42 and 43 are interconnected by rodlike insulators 44, preferably four in number and disposed around the peripheries thereof, see FIG. 7, each insulator 44 having a threaded opening 46 at each end for reception of a cap screw 47 to secure the parts together.

As seen in FIG. 5, a metallic rod 48 is threadedly secured adjacent its upper end by nuts 49 to both plates 42 and 43 at the centers thereof while at the rod's lower end a hook 51 is provided for connection to the grounded filter banks. It is evident that hook 51 is conductively connected to the ceiling 32, which is grounded, so that the filter bank connected to hook 51 would likewise be grounded.

In FIGS. 6 and 7 the plates 42 and 43 are not conductively interconnected and are accordingly insulated from each other, only the lower plate 43 having a rod 52 secured to it by nuts 53, one at each side of plate 43, rod 52 having at its lower end a hook 54 for connection to the charged filter banks. To one of the insulators 44 is shown attached, as by a connector 56, an electric cable which passes upwardly through an insulated grommet 58 in the ceiling 32 and upper plate 42 and hence to a high-voltage power supply (not shown). The cable 57 at its lower end has its insulation stripped therefrom to expose the conductor 12 which is disposed at a predetermined distance from the plate 43. The connector 56 prevents the conductor 12 from moving from its fixed position with regard particularly to its position with respect to plate 43. In practice it is desirable to place conductor 12 about one-fourth inch from plate 43, so that a voltage on the conductor 12 of about 45,000 volts (DC) will induce a voltage of about 38,000 volts on the plate 43 and, in turn, on the filter bank.

As mentioned hereinbefore, a shield 39 is attached to the ceiling 32 and this shield, as seen in FIGS. 5 and 6, surrounds the hangers 33 and 34. The purpose of each shield 39 is to maintain the insulators 44 in a clean condition, free of paint and dust particles, acting in the manner of a Faraday screen and thus preventing particles from gathering on the insulators 44.

The operation of this invention will now be described in connection with FIG. 1. Paint particles from the grounded spray gun 10 are projected in the direction of the workpiece 11 which is inductively charged to a potential of about 38,000 volts. Paint particles that are not impinged upon the workpiece 11 become charged by the high voltage around the workpiece and will be drawn to grounded filter bank 23. Those particles passing through filter bank 23 will have lost most of their charge and will be accordingly attracted to the surface of the charged filter bank 24 because bank 24 has a high-voltage charge on its surface. Should some particles not be attracted to filter bank 24 but pass therethrough, such particles will have been exposed to the high voltage of filter bank 24 and will take on some of the charge and accordingly be attracted to grounded filter bank 26. Any particles escaping past filter bank 26 will then be caught by the conventional filter 21.

The charge on the filter bank 24 can be controlled by varying the distance between the end of conductor 12 and the plate 43, see FIG. 6. By further separating the conductor 12 from the plate reduces the charge on the plate and, in turn, reduces the charge on the filter bank. For example, paint particle removal can be improved by collecting the particles in depth, that is, at the first charged filter bank having the conductor 12 spaced at three-fourths inch from the bottom plate 43, whereby the induced voltage on the plate 43 and filter bank would be about 25,000 volts; and then at the next charged filter bank having the conductor 12 spaced at one-fourth inch from the plate 43 to induce a charge on the plate 43 and filter bank of about 38,000 volts. In this manner of voltage gradient the first charged filter bank will not collect as much as it otherwise would with the higher voltage thereon, thus leaving some particles for the second charged filter bank. Such collection of particles in depth facilitates removal of the particles from the filter banks.

The operation of FIG. 2 is substantially the same as that of FIG. 1, except that an additional filter bank 29 with a charged gun 10' and grounded workpiece 11 is used.

In actual practice it has been found expedient to coat the filter banks with a conductive solvent, such as butyl cellosolve, which slows the evaporative rate of the paint particles. This prevents the paint particles from drying and becoming a powder which would more readily be drawn by the exhaust fan instead of adhering to the filter bank. In addition, it is expedient at the end of a day's run to take the filter banks and submerge them in strip tanks (not shown) containing a paint remover compatible with the paint to be removed from the filler bank and then rehang them the next morning. Such a paint remover could be xylol-lacquer, thinner, turpentine, and the like.

In practice it has also been found that in accordance with this invention the conventional paper filters 21 are more efficient in extracting the paint particles from the airstream, and thus minimizing pollution of the atmosphere; because the conventional filters 21 are charged by impingement of the charged paint particles, as well as by the charged atmosphere created by the adjacent charged filter, which charged atmosphere and charged particles accumulate to produce a charged conventional filter 21 to catch more particles.

From the foregoing description it will be seen that the present invention provides improved filters for removing particles from an air stream, which filters are readily installed and removed for stripping the same and which can be manufactured in a simple, practical and economical manner. In addition, the filter system of this invention is applicable to all paint spray booths, whether electrostatic or conventional, and in fact is applicable to industrial plants for the removal of pollutants normally discharged by smoke stacks.

As various changes may be made in the form, construction, and arrangement of the parts herein, without departing from the spirit and scope of the invention and without sacrificing any of its advantages, it is to be understood that all matters are to be interpreted as illustrative and not in any limiting sense

I claim:

1. Apparatus for filtering particles from an airstream comprising at least two spaced filter banks disposed in depth in the airstream in which one of said filter banks is grounded and another of said filter banks is inductively charged with a high voltage, each of said filter banks comprising a top and bottom horizontal member and a plurality of spaced flat elements secured between said members, hanger means for carrying each of said filter banks, said hanger means for said charged filter bank comprising a pair of spaced upper and lower plates, means including a plurality of insulators for interconnecting said plates, a rod having a hook at its lower end for connection to said top member, means for securing an upper end of said rod to said lower plate, means for securing said upper plate to

a supporting member, and a conductor having a high voltage charge adjacent said lower plate for inductively charging said lower plate and said charged filter bank with a corresponding high voltage determined by the space between an end of said conductor and said lower plate.

2. Apparatus in accordance with claim 1, wherein one of said insulators includes a connector for supporting said conductor in a fixed position with respect to said lower plate.

3. Apparatus in accordance with claim 1, including a tubular member surrounding said insulators and secured to said ceiling for shielding said insulators from said particles.