Sept. 17, 1929. A. WEISS 1,728,648

TAXIMETER VEHICLE

Filed March 21, 1928

Fig. 1,

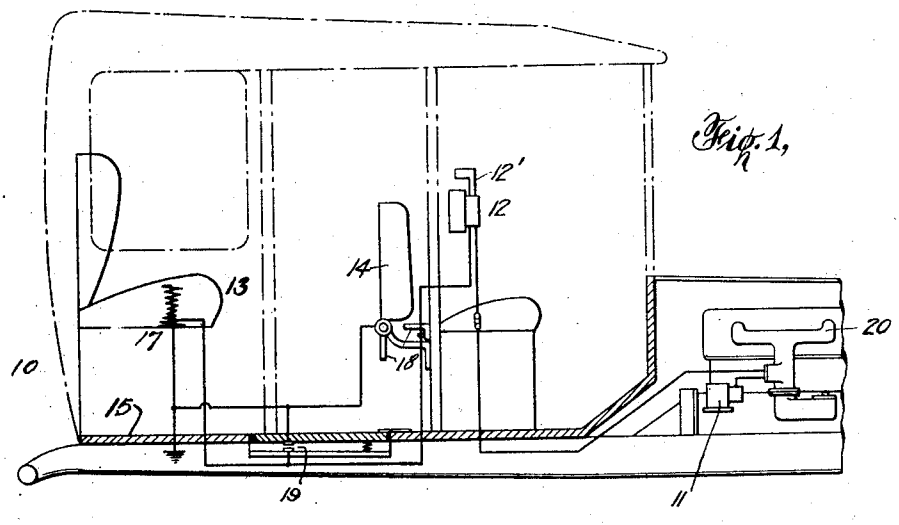

Fig. 2,

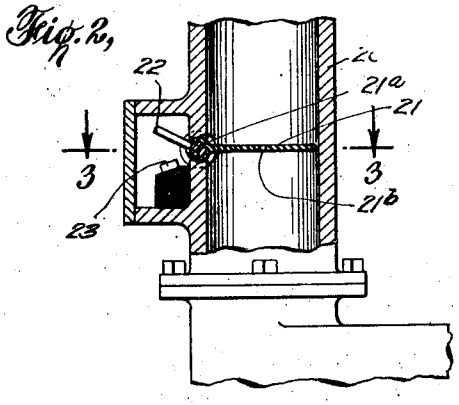

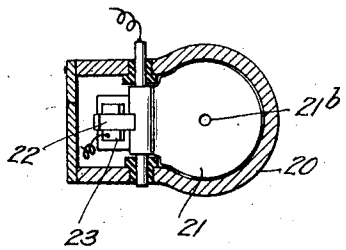

Abraham Weiss
INVENTOR

BY Mac N. Adamson
ATTORNEY

Patented Sept. 17, 1929

1,728,648

UNITED STATES PATENT OFFICE

ABRAHAM WEISS, OF NEW YORK, N. Y.

TAXIMETER VEHICLE

Application filed March 21, 1928. Serial No. 263,316.

This invention relates to attachments for taximeter vehicles. The fare register or clock is generally controlled through a hand lever called the "flag" in such manner that when the latter is raised or in a position indicating "vacant," the registering mechanism or the clock is uncoupled and will not register the fare, but when the flag is lowered, the clock will be in operation while the vehicle is driven.

Unscrupulous drivers instead of charging by the register omit moving the flag but make special rates to the passengers, so that the fare received is a loss to the owner of the vehicle.

To obviate such abuses my present invention has for its object to provide means whereby the driving of the vehicle with any appreciable speed, when occupied by a passenger without setting the fare register into registering position will be rendered impossible.

To accomplish my object I make use of an electric switch controlled by the flow of any fluid in the motor system, as for instance the flow of the fuel, gas or air through the intake manifold.

In the present embodiment, I make use of a butterfly or throttle valve in the manifold that is controlled by the flow of the fuel therethrough, which valve is equipped with a switch inserted in a circuit leading on one hand through the magneto or other ignition system of the motor and on the other hand through a switch controlled by the fare register and a switch controlled automatically by the occupant of the passenger compartment of the vehicle. This valve operated switch will when on closing while the other two switches are closed close the electric circuit through the magneto and ground the latter. As a result thereof the motor will be stalled.

To make my invention more clear the same is illustrated in the accompanying drawing in which similar reference characters denote corresponding parts and in which Fig. 1 is a diagrammatic side view of a taximeter vehicle equipped with my novel attachment; Fig. 2 a sectional view of the manifold and Fig. 3 a cross section on line 3—3 of Fig. 2.

Referring to the drawing in detail 10 denotes a taximeter vehicle of usual construction employing for example a high tension magneto 11 to produce ignition. 12 denotes the usual flag controlled fare register or clock, 13 and 14 the seats and 15 the floor of the passenger compartment. There is a switch (not shown) adapted to be controlled from the flag handle 12′. 17, 18 and 19 denote the switches controlled by pressure, as by the weight of the occupant of the passenger compartment. The switch 17 is arranged under the main seat, 18 at the back of the auxiliary seat and 19 under the floor of said compartment.

20 denotes the intake manifold for the fuel. The same is provided at a suitable point with a butterfly or throttle valve 21 which extends transversely and is pivoted or otherwise rotatively supported at its circumference as 21ª. The valve is adapted to be very light and swing freely on its pivot, so that it will be easily and readily opened under the influence of the gas or air flowing through said manifold when the accelerator is operated.

The hinged or pivotal end of said auxiliary throttle valve may be formed with an extension to serve as an electric contact piece which forms part of the auxiliary switch to be controlled by the flow of the fuel. The other contact piece of said switch is formed by a block 23 insulated from the former and conductively connected to the magneto 11.

The mode of operation is as follows:

Assuming the passenger compartment is occupied so that the switch or switches therein are closed. Let us further assume that while the compartment is occupied the flag is left in the "vacant" position. Now, should the driver attempt to drive the vehicle and press on the accelerator, the fuel passing through the intake manifold 20 will swing the throttle valve 21 open, causing the switch 22, 23 controlled thereby to close the circuit through the magneto. As a result thereof the latter will be grounded and the motor cease to operate. A new attempt of the driver to feed the gas will have the same result. Thus the vehicle can proceed only in jerks.

In order to avoid stalling of the motor, while the vehicle is standing still, the butterfly valve 21 may have a narrow opening 21^b to permit some fuel to pass to the motor.

The auxiliary switch may of course be controlled by the flow of any other liquid or fluid therein in the motor system. The construction too may be modified in various ways without departing from the spirit of my invention. I, therefore, do not wish to limit myself to the details described and shown.

What I claim is:

1. In a taximeter vehicle, passenger controlled means, means controlled from the fare register, a fluid feed for the motor of said vehicle and a valve mounted in said feed and controlled by the flow of said fluid and so connected to said other two means, that when said vehicle is occupied while the fare register is not set, said valve will affect the operation of the motor.

2. In a taximeter vehicle a passenger controlled electric switch, a switch controlled by the fare register, a throttle valve in the intake manifold controlled by the flow of the fuel through the latter, and a switch operated by said throttle valve and in circuit with said other two switches and with the motor controlling means, so that when said circuit is closed by the said third switch the operation of the motor will be affected.

3. In a taximeter vehicle, a passenger controlled switch, a switch controlled by the fare register, a throttle valve in the intake manifold controlled by the flow of the fuel through the latter and a switch operated by said throttle valve and in circuit with said other two switches and with the motor ignition circuit so that when said circuit is closed by said third switch and said fare register switch is in "vacant" position the operation of said motor will be affected as soon as fuel begins to flow in large quantities through said intake manifold.

4. In a taximeter vehicle, a passenger controlled means, means controlled from the fare register, a fluid feed for the motor of said vehicle, a valve in said feed and controlled by flow of said fluid and so connected to said other two means that when said vehicle is occupied and said fare register remains in "vacant" position, said valve will affect the operation of said motor, and means on said valve whereby said motor may idle with a passenger in said vehicle and while said register remains in "vacant" position.

5. In a taximeter vehicle, a passenger controlled means, means controlled from the fare register, a valve in said feed and controlled by the flow of fluid in said feed and so connected with said other two means that when said vehicle is occupied by a passenger and said fare register remains in "vacant" position, said valve will affect the operation of said motor, said valve being provided with an opening whereby said motor may idle with a passenger in said vehicle and while said register remains in "vacant" position.

6. In a device as per claim 3, in which said valve is provided with an opening whereby said motor may idle with a passenger in said vehicle and while said register remains in "vacant" position.

In testimony whereof I affix my signature.

ABRAHAM WEISS.